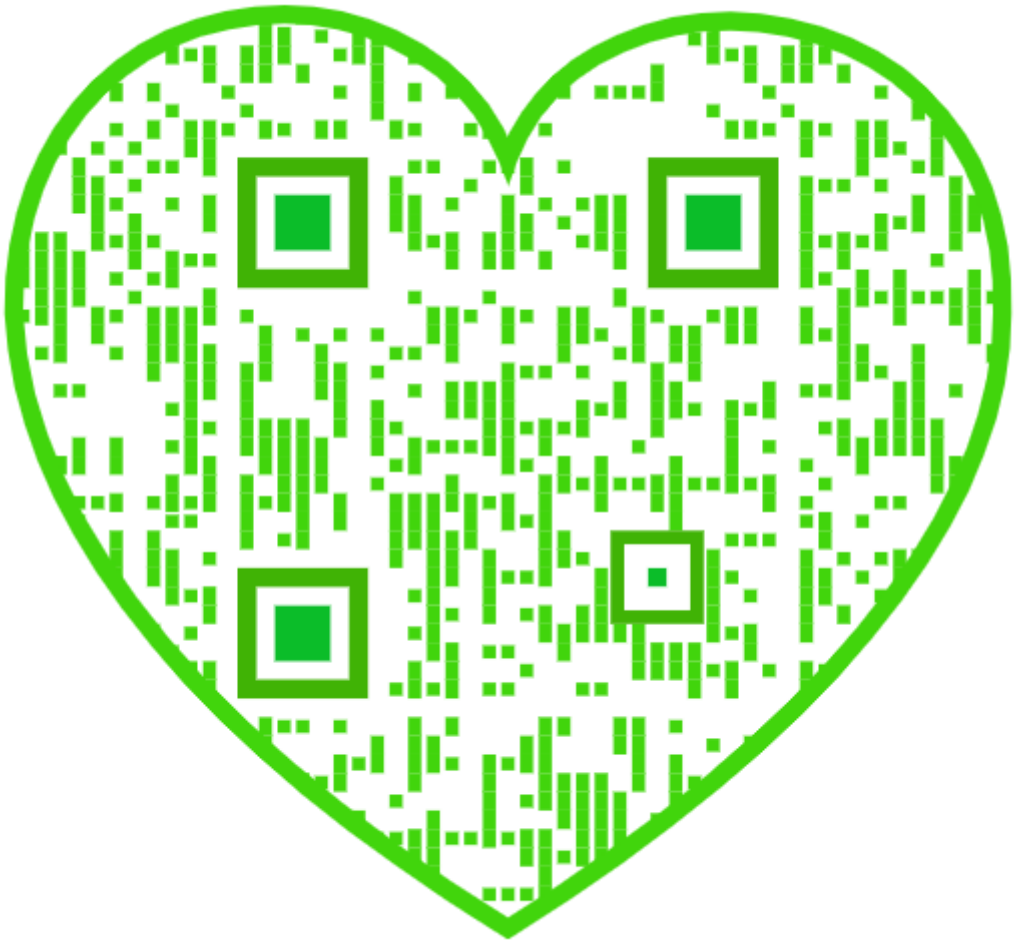

Digitized by the Internet Archive
in 2010 with funding from
NCSU Libraries

http://www.archive.org/details/manufactureofpul01join

THE MANUFACTURE
OF
PULP AND PAPER

VOLUME I

Pulp and Paper Manufacture

IN FIVE VOLUMES

An Official Work Prepared
under the direction of the

Joint Executive Committee of the
Vocational Education Committees of the
Pulp and Paper Industry of the
United States and Canada

VOL. I—MATHEMATICS, HOW TO READ DRAWINGS, PHYSICS.

II—MECHANICS AND HYDRAULICS, ELECTRICITY, CHEMISTRY.

III—PREPARATION OF PULP.

IV, V—MANUFACTURE OF PAPER.

THE MANUFACTURE OF PULP AND PAPER

A TEXTBOOK OF MODERN PULP AND PAPER MILL PRACTICE

Prepared Under the Direction of the Joint Executive Committee on Vocational Education Representing the Pulp and Paper Industry of the United States and Canada

VOLUME I

ARITHMETIC, ELEMENTARY APPLIED MATHEMATICS, HOW TO READ DRAWINGS, ELEMENTS OF PHYSICS

BY

J. J. CLARK, M.E.

FIRST EDITION
THIRD IMPRESSION

McGRAW-HILL BOOK COMPANY, INC.
NEW YORK: 370 SEVENTH AVENUE
LONDON: 6 & 8 BOUVERIE ST., E. C. 4
1921

Copyright, 1921, by the
Joint Executive Committee of the Vocational Education Committees
of the Pulp and Paper Industry.

All Rights Reserved,
Including Those of Translation.

PRINTED IN THE UNITED STATES OF AMERICA

THE MAPLE PRESS - YORK PA

PREFACE

In numerous communities where night schools and extension classes have been started or planned, or where men wished to study privately, there has been difficulty in finding suitable textbooks. No books were available in English, which brought together the fundamental subjects of mathematics and elementary science and the principles and practice of pulp and paper manufacture. Books that treated of the processes employed in this industry were too technical, too general, out of date, or so descriptive of European machinery and practice as to be unsuitable for use on this Continent. Furthermore, a textbook was required that would supply the need of the man who must study at home because he could not or would not attend classes.

Successful men are constantly studying; and it is only by studying that they continue to be successful. There are many men, from acid maker and reel-boy to superintendent and manager, who want to learn more about the industry that gives them a livelihood and by study to fit themselves for promotion and increased earning power. Pulp and paper makers want to understand the work they are doing—the how and why of all the various processes. Most operations in this industry are, to some degree, technical, being essentially either mechanical or chemical. It is necessary, therefore, that the person who aspires to understand these processes should obtain a knowledge of the underlying laws of Nature through the study of the elementary sciences and mathematics, and be trained to reason clearly and logically.

After considerable study of the situation by the Committee on Education for the Technical Section of the Canadian Pulp and Paper Association and the Committee on Vocational Education for the Technical Association of the (U. S.) Pulp and Paper Industry, a joint meeting of these committees was held in Buffalo

in September, 1918, and a Joint Executive Committee was appointed to proceed with plans for the preparation of the text, its publication, and the distribution of the books. The scope of the work was defined at this meeting, when it was decided to provide for preliminary instruction in fundamental Mathematics and Elementary Science, as well as in the manufacturing operations involved in modern pulp and paper mill practice.

The Joint Educational Committee then chose an Editor, Associate Editor, and Editorial Advisor, and directed the Editor to organize a staff of authors consisting of the best available men in their special lines, each to contribute a section dealing with his specialty. A general outline, with an estimated budget, was presented at the annual meetings in January and February, 1919, of the Canadian Pulp and Paper Association, the Technical Association of the Pulp and Paper Industry and the American Paper and Pulp Association. It received the unanimous approval and hearty support of all, and the budget asked was raised by an appropriation of the Canadian Pulp and Paper Association and contributions from paper and pulp manufacturers and allied industries in the United States, through the efforts of the Technical Association of the Pulp and Paper Industry.

To prepare and publish such a work is a large undertaking; its successful accomplishment is unique, as evidenced by these volumes, in that it represents the cooperative effort of the Pulp and Paper Industry of a whole Continent.

The work is conveniently divided into sections and bound into volumes for reference purposes; it is also available in pamphlet form for the benefit of students who wish to master one part at a time, and for convenience in the class room. This latter arrangement makes it very easy to select special courses of study; for instance, the man who is specially interested, say, in the manufacture of pulp or in the coloring of paper or in any other special feature of the industry, can select and study the special pamphlets bearing on those subjects and need not study others not relating particularly to the subject in which he is interested, unless he so desires. The scope of the work enables the man with but little education to study in the most efficient manner the preliminary subjects that are necessary to a thorough understanding of the principles involved in the manufacturing processes and operations; these subjects also afford an excellent review and reference textbook to others. The work

is thus especially adapted to the class room, to home study, and for use as a reference book.

It is expected that universities and other educational agencies will institute correspondence and class room instruction in Pulp and Paper Technology and Practice with the aid of these volumes. The aim of the Committee is to bring an adequate opportunity for education in his vocation within the reach of every one in the industry. To have a vocational education means to be familiar with the past accomplishments of one's trade and to be able to pass on present experience for the benefit of those who will follow.

To obtain the best results, the text must be diligently studied; a few hours of earnest application each week will be well repaid through increased earning power and added interest in the daily work of the mill. To understand a process fully, as in making acid or sizing paper, is like having a light turned on when one has been working in the dark. As a help to the student, many practical examples for practice and study and review questions have been incorporated in the text; these should be conscientiously answered.

The Editor extends his sincere thanks to the Committee and others, who have been a constant support and a source of inspiration and encouragement; he desires especially to mention Mr. George Carruthers, Chairman, and Mr. R. S. Kellogg, Secretary, of the Joint Executive Committee; Mr. J. J. Clark, Associate Editor, Mr. T. J. Foster, Editorial Advisor, and Mr. John Erhardt of the McGraw-Hill Book Company, Inc.

The Committee and the Editor have been generously assisted on every hand; busy men have written and reviewed manuscript, and equipment firms have contributed drawings of great value and have freely given helpful service and advice. Among these kind and generous friends of the enterprise are: Mr. O. Bache-Wiig, Mr. James Beveridge, Mr. J. Brooks Beveridge, Mr. H. P. Carruth, Mr. Martin L. Griffin, Mr. H. R. Harrigan, Mr. Arthur Burgess Larcher, Mr. J. O. Mason, Mr. Elis Olsson, Mr. George K. Spence, Mr. Edwin Sutermeister, Mr. F. G. Wheeler, and American Writing Paper Co., Dominion Engineering Works, E. I. Dupont de Nemours Co., F. C. Huyck & Sons, Hydraulic Machinery Co., Improved Paper Machinery Co., E. D. Jones & Sons Co., A. D. Little, Inc., National Aniline and Chemical Works, Process Engineers, Pusey & Jones Co., Rice, Barton &

Fales Machine and Iron Works, Ticonderoga Paper Co., Waterous Engine Works Co., and many others.

J. Newell Stephenson,
Editor

For the

Joint Executive Committee on Vocational Education,

George Carruthers, *Chairman*,
T. L. Crossley, G. E. Williamson,
R. S. Kellogg, *Secretary*,
C. P. Winslow.

Representing the Technical Section of the Canadian Pulp and Paper Association

T. L. Crossley, *Chairman*,
George Carruthers,
A. P. Costigane,
Dan Daverin,
C. Nelson Gain,
J. N. Stephenson.

Representing the Technical Association of the (U. S.) Pulp and Paper Industry.

George E. Williamson, *Chairman*,
Hugh P. Baker,
Henry J. Guild,
R. S. Kellogg,
Otto Kress,
W. S. Lucey,
C. P. Winslow.

CONTENTS

PAGE

PREFACE v

SECTION 1

Arithmetic

PART I

NOTATION AND ENUMERATION 1–10
ADDITION AND SUBTRACTION 11–21
MULTIPLICATION AND DIVISION 22–34
SOME PROPERTIES OF NUMBERS 34–39
EXAMINATION QUESTIONS 41–42

PART II

GREATEST COMMON DIVISOR AND LEAST COMMON MULTIPLE . . . 43–47
FRACTIONS 48–64
INVOLUTION 64–67
DECIMALS AND DECIMAL FRACTIONS 67–76
SIGNS OF AGGREGATION 76–77
RATIO AND PROPORTION 77–85
EXAMINATION QUESTIONS 87–88

PART III

SQUARE ROOT 89–98
PERCENTAGE 98–106
COMPOUND NUMBERS 106–113
THE METRIC SYSTEM 113–124
THE ARITHMETICAL MEAN 125–126
EXAMINATION QUESTIONS 127–128

SECTION 2

Elementary Applied Mathematics

PART I

MATHEMATICAL FORMULAS 1–4
ALGEBRAIC ADDITION, SUBTRACTION, MULTIPLICATION, AND DIVISION 4–18
EQUATIONS 18–27
ACCURACY IN CALCULATION 27–33
APPROXIMATE METHOD FOR FINDING ROOTS 33–39
EXAMINATION QUESTIONS 41–42

PART II

	Page
Mensuration of Plane Figures	43–47
Triangles	50–60
Quadrilaterals	61–66
Regular Polygons	66–68
The Circle	68–89
Inscribed and Circumscribed Polygons	89–96
Examination Questions	97–100

PART III

Mensuration of Solids	101–130
Similar Figures	131–137
Symmetrical Figures	137–143
Examination Questions	145–146

SECTION 3

How to Read Drawings

Representing Solids on Planes	1–11
Special Features Pertaining to Drawings	12–23
Reading Drawings—Visualizing the Object	23–28
Some Examples in Reading Drawing	28

SECTION 4

Elements of Physics

PART I

Matter and Its Properties	1–6
Motion and Velocity	6–9
Force, Mass and Weight	9–14
Work and Energy	14–17
Hydrostatics—Pascal's Law	18–30
Buoyancy and Specific Gravity	31–39
Capillarity	39–41
Pneumatics	42–54
Examination Questions	55–56

PART II

Properties of Perfect Gases	57–66
Nature of Measurement of Heat	66–80
Change of State	81–90
Light	90–117
Examination Questions	119–120
Index	121–132

SECTION 1

ARITHMETIC

PART 1

NOTATION AND ENUMERATION

DEFINITIONS

1. **A unit** is the standard by which anything is measured. For example if it were desired to measure the length of a room, it could be done with a tape line, a rule, a stick of some convenient length, or anything else that would form a basis of comparison. Suppose, for example, a broomstick were used; the broomstick would be laid on the floor, with one end *a* against the wall at one side of the room and with the other end *b* extending towards the opposite side of the room, as shown in Fig. 1. The point *b* would be marked and the broomstick would be shifted so as to occupy the position *bc*, then to the position *cd*, and so on until the other wall was reached. Each of the lengths *ab*, *bc*, etc. is equal in length to the broomstick, which is in this case the *unit* of length. The word that denotes how many times the room is longer than the broomstick is *number*. In other words **number** means an aggregation, or collection, of units; a number may also mean a single unit or a part of a unit—it refers in all cases to the complete measurement.

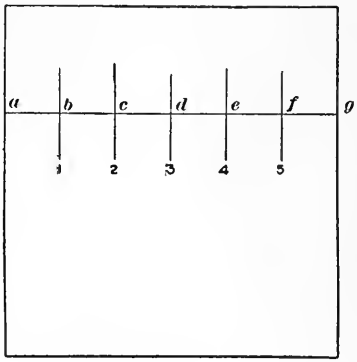

FIG. 1.

As another example, consider the compensation that a man receives for his work. For working a certain number of hours he receives a certain number of dollars; here two units are involved,

hours and *dollars*. The unit of hours is established or arrived at by dividing or splitting up a day (another unit) into twenty-four equal parts and calling one of these parts *one hour*. The unit of money is established by law; it is called in the United States of America *one dollar*, and is equivalent in value to about twenty-three and one-fourth grains (another unit) of pure gold. Canada has a unit of the same name and of practically the same value.

2. Three different kinds of units, according to their origin, have been mentioned, the broomstick, which may be called an *expediency* unit; the hour, which is an *international* unit for measuring time; and the dollar, which is a *legal* unit, or one established by law. According to their use, units have many names, and anything that can be expressed as a certain number of units is called a **quantity.** The science that treats of quantity and its measurement is called **mathematics.**

3. The difference between *quantity* and *number* is this: quantity is a general term and is applied to anything that can be measured or expressed in units; number is simply a term applied to a unit or a collection of units and is usually restricted to expressions containing only figures.

4. The act or process by which numbers are used to reckon, count, estimate, etc. is called **computation** or **calculation.**

5. Arithmetic is that branch of mathematics which treats of numbers and their use in computation.

Numbers are divided into two general classes, according to their signification: *abstract numbers* and *concrete numbers*.

6. An **abstract number** is one not applied to any object or quantity, as *three, twelve, one hundred seventeen*, etc.

7. A **concrete number** is one relating to a particular kind of object or quantity, as five dollars, eleven pounds, seven hours, etc.

According to their units, numbers are also divided into two general classes:

8. Like numbers are numbers having the same units: for example, *seven hours, twelve hours*, and *three hours* are like numbers, since they all have the same unit—one hour; *fourteen, seventeen* and *twenty* are also like numbers, the unit of each being *one*. All abstract numbers are like numbers.

9. Unlike numbers are numbers having different units; for example, five dollars, eight hours, and ten pounds are unlike

numbers since their units are unlike, being respectively one dollar, one hour, and one pound.

NOTATION

In order that numbers may be recorded, some method of writing and reading them must be devised.

10. Notation is the word used to express the act of and the result obtained by writing numbers.

11. Numeration is the act or process of reading numbers that have been written.

12. Notation is accomplished in three ways: (1) by words; (2) by letters; (3) by figures. The first method, by words, is never used in computation, only the second and third methods having ever been employed for this purpose. The second method, called the **Roman notation,** is very seldom used at the present time, its only use is for numbering, as the indexes, chapters, etc. of books, and in a few cases for dates. The third method, the **Arabic notation,** employs certain characters, called figures, and is in universal use today.

THE FIRST OR WORD METHOD

13. This is really only the names of the different numbers. The first twelve numbers have distinct names; beyond these all are formed according to a definite system that is readily learned. The names of the first twelve numbers are: one, two, three, four, five, six, seven, eight, nine, ten, eleven, twelve. The next seven numbers all end in *teen*, which means *and ten*, the first part of the word being derived from the words three, four, etc. up to nine; they are thirteen, fourteen, fifteen, sixteen, seventeen, eighteen, and nineteen. Thirteen means three and ten, fourteen means four and ten, etc. The name of the next number is *twenty*, and the names of the next nine numbers are all compound words, having for their first element the word *twenty* and for their second element the words *one*, *two*, etc. to nine. Thus, twenty-one, twenty-two, etc. to twenty-nine. The word *twenty* means two tens. The next number is *thirty*, which means three tens, and the next nine are thirty-one, thirty-two, etc. to thirty-nine. Then follow *forty*, *fifty*, *sixty*, *seventy*, *eighty*, and *ninety*, with their

combinations of *one, two,* etc. to nine. The number following ninety-nine is *one hundred.* The numbers are then repeated, with the element one hundred added, one-hundred-one, one-hundred-two, etc., one-hundred-twenty-one, one-hundred-twenty-two, etc. to one-hundred-ninety-nine, the next number being two-hundred. The notation is continued in this manner to nine-hundred-ninety-nine, the next number being one-thousand; then follow one-thousand-one, one-thousand-two, etc., one-thousand-one-hundred-one, one-thousand-one-hundred-two, etc. to nine-thousand-nine-hundred-ninety-nine, the next number being ten-thousand. Then follow ten-thousand-one, etc. to nine-hundred-thousand-nine-hundred-ninety-nine, the next number being called *one-million.* The notation is then carried on *one-million-one,* etc. up to one-thousand-million, which in the United States, France, and the majority of other countries is called a billion; a thousand billion is a *trillion,* etc. In Great Britain and a few other countries, a billion is a million-million, a trillion a million-billion, etc.

THE ROMAN NOTATION

14. The Roman notation uses the letters I, V, X, L, C, D, and M. The values of the letters when standing alone are: I is one, V is five, X is ten, L is fifty, C is one-hundred, D is five-hundred, M is one-thousand. Formerly other letters were used, but these are all that are employed now. Numbers are expressed by letters in accordance with the following principles:

I. *Repeating a letter repeats its value.*

Thus, I is one, II is two, III is three, XX is two tens or twenty, XXX is three tens or thirty, CC is two hundred, MM is two-thousand, etc.

V, D, and L are never repeated; only I, X, C, and M are ever used more than once in any number, except when they precede a letter of higher value.

II. *If a letter precedes one of greater value, their difference is denoted; if it follows a letter of greater value, their sum is denoted.*

Thus, IV is four, VI is six, IX is nine, XII is twelve, XL is forty, LX is sixty, XC is ninety, etc. Only one letter of lower value is allowed to precede one of higher value, and in general, the only letters used are I and X. Further, I precedes only V and X, and X precedes only L and C. Occasionally, however, C is used in

this manner before M; as for example, in the date nineteen-hundred-four, when instead of writing MDCCCCIV the shorter form MCMIV is used. Pope Leo XIII wrote the date eighteen-hundred ninety-five MDCCCVC instead of MDCCCXCV. On the Columbus memorial in front of the Union Station, Washington, D. C., the year of his birth is expressed by MCDXXXVI, which, of course, is read fourteen-hundred-thirty-six.

III. *A bar placed over a letter multiples its value by one-thousand.*

Thus, $\overline{X}$ is ten-thousand, $\overline{L}$ is fifty-thousand, $\overline{XC}DXVII$ is ninety-thousand five-hundred seventeen. In the last expression, it might be thought that D was preceded by X and C; this is not the case, however, as $\overline{XC}$ is treated as a single letter having a value of ninety-thousand.

The following table illustrates the foregoing principles and applications of the Roman notation:

VIII is eight
XII is twelve
XVIII is eighteen
XXIX is twenty-nine
XXXV is thirty-five
XLIV is forty-four
LXXVI is seventy-six
XCII is ninety-two
CXLIV is one-hundred forty-four
CCCCL is four-hundred fifty
$\overline{\text{IX}}\text{LX}$ is nine-thousand sixty
$\overline{\text{C}}$ is one-hundred-thousand
$\overline{\text{D}}$ is five-hundred-thousand
$\overline{\text{M}}$ is one-million

THE ARABIC NOTATION

15. The Arabic notation employs ten characters, called **figures,** to represent numbers; these characters together with their names are:

0	1	2	3	4	5	6	7	8	9
naught *cipher* *zero*	*one*	*two*	*three*	*four*	*five*	*six*	*seven*	*eight*	*nine*

The first figure (0) is called **naught, cipher,** or **zero,** and has no value. The other nine figures are called **digits,** and each has the value denoted by its name.

16. For numbers higher than nine it is necessary to use two or more figures to express them. Thus ten is expressed by the combination 10, the cipher indicating that there are no units in the right-hand figure; 11 is eleven, 12 is twelve, 13 is thirteen, etc. up to 19 or nineteen. All these expressions mean ten and one, ten and two, etc. Twenty is written 20, twenty-one, 21, etc.; thirty is written 30, thirty-three, 33, etc.; and so on up to 99 or ninety-nine. One-hundred is written 100, the right-hand cipher meaning that there are no units and the next that there are no tens. Five-hundred-forty-two is written 542, five-hundred-two is written 502, five-hundred-forty is written 540. In a similar manner one-thousand is written 1000, ten-thousand is written 10000, one-hundred-thousand is written 100000, one-million is written 1000000, etc.

17. As stated before the cipher has no value, but it plays a very important part in expressing numbers by figures; it not only indicates the absence of a digit from the place it occupies, but it also locates the digits with respect to one another.

Any number, as for example, 5642, is equivalent to 5000 *and* 600 *and* 40 *and* 2; that is, in this case, it is equivalent to four separate numbers, three of which are single digits, all followed by one or more ciphers. Such a number might be written 5000 + 600 + 40 + 2, but this is not necessary, since the ciphers can be omitted without impairing the result, with the additional advantage of saving space and figures.

18. The number denoted by a figure in any whole number is determined by writing the figure and then writing after it as many ciphers as there are figures to the right of the one selected. Thus, in the number 2645893, the number denoted by the figure 6 is 600000 or six-hundred-thousand; the number denoted by the figure 5 is 5000 or five-thousand; etc.

NUMERATION

19. For convenience numbers are divided into **orders** and **periods.** A figure belongs to the *first order* when it occupies the units place; it belongs to the *second order* when it occupies the tens place; etc. In the number 2645893, 2 belongs to the seventh order, 6 to the sixth order, etc. Numbers are divided by commas into *periods* of three figures each, beginning with the first order,

to assist in reading them; the periods are named according to the name of the lowest order in the periods. Thus, the number 506,273,985,114 contains four full periods; beginning at the right and going to the left, the names of the periods are, respectively, *units, thousands, millions, billions.* The names of periods and orders represented by the figures in the above number are conveniently shown in the table below.

Fourth Period. Billions.			*Third Period. Millions.*			*Second Period. Thousands.*			*First Period. Units.*		
Twelfth Order. (Hundred-Billions.)	Eleventh Order. (Ten-Billions.)	Tenth Order. (Billions.)	Ninth Order. (Hundred-Millions.)	Eighth Order. (Ten-Millions.)	Seventh Order. (Millions.)	Sixth Order. (Hundred-Thousands.)	Fifth Order. (Ten-Thousands.)	Fourth Order. (Thousands.)	Third Order. (Hundreds.)	Second Order. (Tens.)	First Order. (Units.)
5	0	6,	2	7	3,	9	8	5,	1	1	4

In pointing off these figures, begin at the right-hand figure and count—*units, tens, hundreds;* the next group of three figures is *thousands;* therefore, insert a comma (,) before beginning with them. Beginning at the figure 5, say *thousands, ten thousands, hundred thousands,* and insert another comma; next read *millions, ten millions, hundred millions* (insert another comma); lastly, read *billions, ten billions, hundred billions.*

20. A number is read by beginning at the left and reading the figures composing each period as though it formed a number by itself and affixing the name of the period, taking each period in succession from left to right. Thus, the above number is read: *five-hundred-six billion two-hundred seventy-three million nine-hundred-eighty-five thousand one-hundred-fourteen.* Note that the

name of the units period is not pronounced—it is always understood.

Reading a line of figures in this manner is called **numeration;** and when the **numeration** is changed back to *figures,* it is called **notation.**

For instance, the writing of the following figures,

72,584,623

would be the *notation,* and the *numeration* would be *seventy-two million five-hundred-eighty-four thousand six-hundred-twenty-three.*

21. NOTE.—It is customary to leave the "s" off the words millions, thousands, etc. in cases like the above, both in speaking and writing.

22. Consider the number 500,000. If the 5, which is here a figure of the sixth order, be moved one place to the *right,* so as to occupy the fifth order, the number becomes 50,000, which is only one-tenth as large as before; while if the 5 be moved one place to the *left,* so as to occupy the seventh order, the number is ten times larger. In other words, moving a figure to the right de*creases* the number it represents ten times for each order it passes into; and moving the figure to the left increases the number represented by the digit ten times for each order passed into. Thus, 5 is one-tenth of 50 and 50 is ten times 5; 50 is one-tenth of 500 and 500 is ten times 50; etc.

23. **Integers and Decimals.** Any figure, say 5, represents the number of units signified by its name, when standing alone. Moving it one place to the left, it represents five tens or fifty, and is written 50; moving it one place to the right, it represents five-tenths, and is written 0.5. Moving the figure two places to the left of its first position, it represents five hundred, written 500; if moved two places to the right, it represents five hundredths, written 0.05. Now 0.5 means that this number is only one-tenth as large as 5, and 0.05 means that this number is only one-tenth as large as 0.5 or one-hundredth as large as 5. This notation may be continued to the right as far as desired.

24. The dot is called the **decimal point;** it is used to point out the unit figure, and the part of the number to the right of the unit figure is called a **decimal.** All numbers not having any digits to the right of their unit figures (and which do not contain a common fraction) are called **whole numbers** or **integers.** The numbers dealt with heretofore have all been integers. The part

of a number to the left of the decimal point is called the **integral** part of the number.

25. Decimals are read in much the same manner as integers. The only difference is that after the number has been read as though it were an integer, the name of the lowest (right-hand) order is pronounced with the letters *ths* added to the name. Thus, 0.52976 is read fifty-two thousand nine-hundred-seventy-six *hundred-thousandths;* 0.529 is read five-hundred-twenty-nine *thousandths.*

26. In using decimals be careful to *mark the units place by placing the decimal point immediately to the right of the figure in the units place.* Then continue the notation to the right of the units place precisely as to the left of it. The resemblance between the names of the places on the two sides of the units place is shown by the following table, in which the differences are marked by *italics.*

hundred thousands	ten thousands	thousands	hundreds	tens	units	tenths	hundredths	thousandths	ten-thousandths	hundred-thousandths
5	4	3	2	1	0	.1	2	3	4	5

27. In this (the Arabic) system of notation, each place or order is said to be **higher** than any place to the right of it, and **lower** than any place to the left of it. Thus, in the number 43.127, the highest place is tens, and the lowest place is thousandths.

28. In writing and printing, decimals are frequently written .5, .529 etc. instead of 0.5, 0.529, etc. The latter way is the better and more correct, and the student is advised to write the cipher in all cases; for, if the decimal point should fail to print, be indistinct, or through carelessness not written, the cipher will frequently serve to distinguish between integers and decimals. It will be found, however, that the cipher has frequently been omitted throughout this textbook to accustom the reader to both methods of writing decimals.

29. A number, part of which is an integer and part a decimal is called a **mixed number.** A mixed number is read by reading

the integral part first, pronouncing the word *and*, and then reading the decimal part. Thus, the number given in Art. **26**, or 543,210.12345 is read five-hundred-forty-three thousand two-hundred-ten and twelve-thousand-three-hundred-forty-five hundred-thousandths.

The abbreviation "Art." means Article, and refers to the numbered paragraphs or sections throughout this textbook. The plural is written Arts.; thus, Arts. **1-10**, means articles **1** to **10**, both inclusive.

Decimals are seldom pointed off into periods, especially in English-speaking countries. It may be done, however, (if desired) in the same manner as integers, beginning at the unit figure. Thus, 0.0000000217 would be pointed off 0.00,000,002,17. In reading this decimal, name the periods until the last is reached and then name the order of the right-hand figure;—in this case, units, thousandths, millionths, billionths, ten-billionths;—this determines the name of the lowest order. The number is then read at once as two-hundred-seventeen ten-billionths.

EXAMPLES FOR PRACTICE

Read the following numbers and write their names:

(1) 20103
(2) 1964727
(3) 7926.4867
(4) 0.0078314

Write the following numbers:

(5) Eight-hundred-sixty-six million forty-six-thousand seven-hundred-thirty-three.

(6) Six-hundred-ninety-one and four-thousand-five-hundred-twenty-three ten-thousandths.

(7) Seventeen and eighty-nine-thousand-two-hundred-seventy-six millionths.

---

30. The Four Fundamental Processes.—The processes of addition, subtraction, multiplication and division are called **fundamental** because all other processes employed in arithmetical computation are based on them; in other words, no computation can be made without employing one or more of these processes.

ADDITION AND SUBTRACTION

ADDITION

31. Suppose it is desired to ascertain the length of a room, and that the distance from one end to the edge of a door nearest that end, the width of the door, and the distance from the other edge of the door to the other end of the room are known to be respectively, 6 feet, 3 feet, and 8 feet; then without getting a rule or other measure, the length of the room can be found by counting, starting with six, counting three more, getting nine, and then counting eight more after nine, getting seventeen. In other words, the combined lengths of 6 feet, 3 feet, and 8 feet is 17 feet, and the numbers 6, 3, and 8 taken together always give 17. The process of finding a single number equivalent in amount to two or more numbers taken together is called **addition,** and the single number found as the result of the process is called the **sum.** Thus, the sum of 6, 3, and 8 is 17. To **add** two or more numbers is to find their sum.

32. The method just described for finding the sum of several numbers is impracticable except for very small numbers. For example, suppose it were desired to find the sum of \$2,904, \$976, and \$3,520; not only would this take a very long time, but there would also be great danger of making a mistake. A method for finding the sum of a series of numbers will now be described.

When it is desired to indicate that several numbers are to be added, they are written in a row and separated by Greek crosses. Thus, the fact that the numbers 6, 3, and 8 are to be added is indicated as follows: $6 + 3 + 8$. The cross $+$ is called the **sign of addition** or **plus** or **plus sign,** and the expression would be read, six plus three plus eight. If it is also desired to write the sum as indicating the result of the addition, this is done in the following manner.

$$6 + 3 + 8 = 17$$

The sign $=$ is called the **equality sign,** it is read **equals** or **is equal to,** and signifies that the result of the operations indicated on one side is exactly equal to the number (or to the result of a series of operations indicated) on the other side. For example, $5 + 2 + 10 = 17$; hence, $6 + 3 + 8 = 5 + 2 + 10 = 17$. This means that the result of the operation $6 + 3 + 8$ is equal to the result of the operation $5 + 2 + 10$ and that either sum is 17.

An expression like $6 + 3 + 8 = 17$ is read, *six plus three plus eight equals seventeen.*

33. Before one can add several numbers it is necessary that the sum of any two numbers from 1 to 9 be recognized as soon as seen. The following table gives the sum of any two numbers

ADDITION TABLE

1 and 1 is 2	2 and 1 is 3	3 and 1 is 4	4 and 1 is 5
1 and 2 is 3	2 and 2 is 4	3 and 2 is 5	4 and 2 is 6
1 and 3 is 4	2 and 3 is 5	3 and 3 is 6	4 and 3 is 7
1 and 4 is 5	2 and 4 is 6	3 and 4 is 7	4 and 4 is 8
1 and 5 is 6	2 and 5 is 7	3 and 5 is 8	4 and 5 is 9
1 and 6 is 7	2 and 6 is 8	3 and 6 is 9	4 and 6 is 10
1 and 7 is 8	2 and 7 is 9	3 and 7 is 10	4 and 7 is 11
1 and 8 is 9	2 and 8 is 10	3 and 8 is 11	4 and 8 is 12
1 and 9 is 10	2 and 9 is 11	3 and 9 is 12	4 and 9 is 13
1 and 10 is 11	2 and 10 is 12	3 and 10 is 13	4 and 10 is 14
1 and 11 is 12	2 and 11 is 13	3 and 11 is 14	4 and 11 is 15
1 and 12 is 13	2 and 12 is 14	3 and 12 is 15	4 and 12 is 16
5 and 1 is 6	6 and 1 is 7	7 and 1 is 8	8 and 1 is 9
5 and 2 is 7	6 and 2 is 8	7 and 2 is 9	8 and 2 is 10
5 and 3 is 8	6 and 3 is 9	7 and 3 is 10	8 and 3 is 11
5 and 4 is 9	6 and 4 is 10	7 and 4 is 11	8 and 4 is 12
5 and 5 is 10	6 and 5 is 11	7 and 5 is 12	8 and 5 is 13
5 and 6 is 11	6 and 6 is 12	7 and 6 is 13	8 and 6 is 14
5 and 7 is 12	6 and 7 is 13	7 and 7 is 14	8 and 7 is 15
5 and 8 is 13	6 and 8 is 14	7 and 8 is 15	8 and 8 is 16
5 and 9 is 14	6 and 9 is 15	7 and 9 is 16	8 and 9 is 17
5 and 10 is 15	6 and 10 is 16	7 and 10 is 17	8 and 10 is 18
5 and 11 is 16	6 and 11 is 17	7 and 11 is 18	8 and 11 is 19
5 and 12 is 17	6 and 12 is 18	7 and 12 is 19	8 and 12 is 20
9 and 1 is 10	10 and 1 is 11	11 and 1 is 12	12 and 1 is 13
9 and 2 is 11	10 and 2 is 12	11 and 2 is 13	12 and 2 is 14
9 and 3 is 12	10 and 3 is 13	11 and 3 is 14	12 and 3 is 15
9 and 4 is 13	10 and 4 is 14	11 and 4 is 15	12 and 4 is 16
9 and 5 is 14	10 and 5 is 15	11 and 5 is 16	12 and 5 is 17
9 and 6 is 15	10 and 6 is 16	11 and 6 is 17	12 and 6 is 18
9 and 7 is 16	10 and 7 is 17	11 and 7 is 18	12 and 7 is 19
9 and 8 is 17	10 and 8 is 18	11 and 8 is 19	12 and 8 is 20
9 and 9 is 18	10 and 9 is 19	11 and 9 is 20	12 and 9 is 21
9 and 10 is 19	10 and 10 is 20	11 and 10 is 21	12 and 10 is 22
9 and 11 is 20	10 and 11 is 21	11 and 11 is 22	12 and 11 is 23
9 and 12 is 21	10 and 12 is 22	11 and 12 is 23	12 and 12 is 24

Since 0 has no value, the sum of any number and 0 is the number itself; thus, 19 and 0 is 19.

from 1 to 12; it should be thoroughly committed to memory, and to do this the reader should propose to himself all kinds of combinations of two numbers until as soon as the numbers are named he can give the sum almost unconsciously. When at work, when walking, or at any time when he has leisure he should practice by saying 8 and 9 is 17, 9 and 5 is 14, 5 and 11 is 16, 9 and 8 is 17, etc. until he can name the sum instantly and correctly.

34. To Add a Digit and a Number Greater than 12.—The sum of a single digit and a number greater than 12 can always be obtained mentally. For example, consider the numbers 58 and 9; write these numbers, one above the other, so that the unit figures stand in the same column, and draw a line under them.

$$\begin{array}{r} 58 \\ 9 \\ \hline \end{array} \qquad \text{or} \qquad \begin{array}{r} 9 \\ 58 \\ \hline \end{array}$$

Now add the unit figures, the sum being 17, and write the sum underneath the line with the unit figure 7 standing in the same column as the unit figures 8 and 9. Now remembering that the 5 in 58 represents 50 add this to the sum of the unit figures, obtaining 67 for the sum of 58 and 9

$$\begin{array}{r} (a) \\ 58 \\ 9 \\ \hline 17 \\ 50 \\ \hline 67 \end{array} \qquad \begin{array}{r} (b) \\ 9 \\ 58 \\ \hline 17 \\ 50 \\ \hline 67 \end{array} \qquad \begin{array}{r} (c) \\ 58 \\ 9 \\ \hline 67 \end{array} \qquad \begin{array}{r} (d) \\ 9 \\ 58 \\ \hline 67 \end{array}$$

Now notice that the same result may be obtained with less figures, in fact mentally, from the following considerations: The sum of any two digits cannot exceed 18, since the largest digit is 9, and $9 + 9 = 18$; $18 = 10 + 8$ or 1 ten and 8 units. Hence, when two numbers are added as above, and the sum of the unit figures is 10 or a greater number, write the unit figure of the sum of the unit figures and carry the 1 ten to the next left-hand column and add it mentally to the figure or figures in that column. Thus, in (*c*) above, 9 and 8 is 17; write 7 and carry 1, which added to 5 makes 6, and $58 + 9 = 67$. In (*d*), 8 and 9 is 17; write 7 and carry 1, which added to 5 makes 6.

35. The student will find it greatly to his advantage to practice adding single digits to numbers less than 100 at every convenient opportunity; let him say, for example, 47 and 8 is 55, 23 and 9 is 32, 36 and 4 is 40, etc., the entire operation being performed

mentally. As soon as proficiency has been obtained in adding simple numbers like these, there will be little trouble in adding any number of figures correctly. Note that if the sum of the figures in the right-hand, or lower, order does not exceed 9, the digit in the next order does not change; but if the sum is 10 or more, the digit is increased by 1.

36. If the larger number contains more than two figures, the operation is exactly the same, except that if the digit in the next to the lowest order is 9, the digit in the next higher order must also be increased by 1. Thus 246 and 5 is 251, since $5 + 6 = 11$, and $4 + 1 = 5$; 594 and 9 is 603, since 9 and 4 is 13, 1 and 9 is 10, and 1 and 5 is 6; 1997 and 8 is 2005, since 8 and 7 is 15, 1 and 9 is 10, 1 and 9 is 10, 1 and 1 is 2; etc.

37. To Add any Two Numbers.—The sum of any two numbers is found as follows: Suppose the numbers are 57,962 and 9,458. Write them so that the figures of the same order stand in the same column and draw a line underneath.

$$\begin{array}{r} 57962 \\ 9458 \\ \hline 67420 \end{array}$$

Add the figures in the right-hand column first, obtaining 10; write the 0 and carry the 1. Add the 1 to the 5 in the next column (making 6), and then add this result to the 6 above it, obtaining 12; write the 2 and carry the 1. Add 1 to the 4 in the next column (making 5), and add this sum to the 9 above it, obtaining 14; write the 4 and carry the 1. Add 1 to the 9 in the next column (making 10), and add this sum to 7 above it, obtaining 17; write the 7 and carry the 1. The 1 added to the 5 in the next column gives 6, which is written as shown.

38. The procedure is exactly the same when either or both the numbers contain decimals. In this case the easiest way to get the figures of the same order under each other is to place the decimal points under each other in the same column.

$$\begin{array}{r} 26.943 \\ 5.71 \\ \hline 32.653 \end{array} \qquad \begin{array}{r} 0.434 \\ 752.933 \\ \hline 753.367 \end{array} \qquad \begin{array}{r} 87.51 \\ 29.492 \\ \hline 117.002 \end{array}$$

In all three of the cases, it will be noted that units are placed under units, tens under tens, tenths under tenths, etc., and that

the decimal point in the result is also directly under the decimal points in the numbers added.

39. To Add more than Two Numbers.—

EXAMPLE.—Find the sum of 8, 4, 6, 9, 7 and 3.

SOLUTION.—

$$\begin{array}{r} 8 \\ 4 \\ 6 \\ 9 \\ 7 \\ 3 \\ \hline 37 \end{array} \quad \textit{Ans.}$$

EXPLANATION.—Beginning at the bottom of the column, add the first two numbers; to the sum, add the third number; to this sum, add the fourth number; etc. Thus, 3 and 7 is 10; 10 and 9 is 19; 19 and 6 is 25; 25 and 4 is 29; 29 and 8 is 37. After practicing addition in this manner, until a certain degree of proficiency has been attained, the reader should abbreviate the process by naming only the sums; thus, 3, 10, 19, 25, 29, 37. This will greatly increase his speed in adding.

EXAMPLES

Find the sum of the following sets of numbers.

(1) $3 + 5 + 1 + 9 + 7 = ?$ *Ans.* 25.

(2) $4 + 2 + 6 + 8 = ?$ *Ans.* 20.

(3) $3 + 4 + 6 + 8 + 7 = ?$ *Ans.* 28.

(4) $5 + 8 + 1 + 6 + 9 + 4 = ?$ *Ans.* 33.

---

40. When the numbers contain more than one, figure use the following rule:

Rule.—I. *Write the numbers so that the figures of the same order will form columns having units under units, tens under tens, tenth under tenths, etc., and draw a line under the bottom row of figures.*

II. *Beginning with the right-hand column, add the digits in that column, and write the unit figure of the sum under the line and in the column that was added. Add the tens figure of the sum to the digits in the next column to the left, add this column and write the unit figure of the sum under the line in the column added. Add the tens figure of the sum (if any) to the digits in the third column, proceeding in this manner until the addition is finished, which will be when all the columns have been added.*

III. *If a cipher* (0) *occurs anywhere, disregard it, since it does not affect the sum.*

Adding the tens figure of the sum of the digits in any column to the digits in the next column to the left is called *carrying.*

EXAMPLE.—236 + 109 + 871 + 52 + 467 + 696 = ?

SOLUTION.—

$$\begin{array}{r} 236 \\ 109 \\ 871 \\ 52 \\ 467 \\ 696 \\ \hline 2431 \end{array} \quad \textit{Ans.}$$

EXPLANATION.—Arrange the numbers as shown, with units under units, tens under tens, etc. Beginning with the right-hand column, say 6, 13, 15, 16, 25, 31; write the 1 under the line and in the column just added, and *carry* 3 to the next column. Say 3, 12, 18, 23, 30, 33; write 3 and carry 3 to add to the digits in the next column. Say 3, 9, 13, 21, 22, 24. As there are no more columns to add, write the last sum, 24, as shown. The sum of all the numbers is 2431.

It is always a good plan to write the abbreviation Ans. (which means *answer*) after the final result has been obtained.

41. If some of the numbers contain decimals, they are added according to the same rule. Arranging the numbers with units under units, etc., brings the decimal points under one another so that they all stand in the same column; hence, I of the rule in Art. **40** might be changed to read: arrange the numbers so that the decimal points stand in the same column. The rest of the rule requires no change.

EXAMPLE.—Add the following numbers: 403.7819, 21.875, 5.2742, 369.92, and 7923.917.

SOLUTION.—

$$\begin{array}{r} 403.7819 \\ 21.875 \\ 5.2742 \\ 369.92 \\ 7923.917 \\ \hline 8724.7681 \end{array} \quad \textit{Ans.}$$

EXPLANATION.—Arranging the numbers so that the decimal points stand in the same column, say 2, 11, and write 1 and carry 1. Say 1, 8, 12, 17, 18; write 8 and carry 1. Say 1, 2, 4, 11, 18, 26; write 6 and carry 2. Say 2, 11, 20, 22, 30, 37; write 7 and carry 3, also writing the decimal point before the 7. Say 3, 6, 15, 20, 21, 24; write 4 and carry 2. Say 2, 4, 10, 12; write 2 and carry 1. Say 1, 10, 13, 17; write 7 and carry 1. Say 1, 8, and write 8. The entire sum is 8724.7681.

42. In bookkeeping, and when making out bills, business statements, etc., the decimal point is usually omitted, a vertical line being used in its place. This practice tends to prevent mistakes

and saves the writing of decimal points, the vertical line separating the dollars from the cents.

EXAMPLE.—Add \$66.72, \$243.27, \$127.85, \$37.40, and \$101.32.

SOLUTION.—

\$ 66	72	
243	27	
127	85	
37	40	
101	32	
\$576	56	*Ans.*

EXPLANATION.—Here the vertical line is used instead of the decimal points. The addition is performed in the usual manner, and the sum is found to be \$576.56.

43. Checking Results.—In business and in engineering, it is of the utmost importance that the final result be correct. While mistakes or blunders are liable to occur, even when the greatest care is taken, they must be overcome by some method of detecting them, and corrections must be made before the final result is accepted. In checking the work of addition, the various numbers may be added again, but if this is done immediately after the first adding, the same mistake is likely to be made again. A better way is to add the several columns *downward;* this causes a change in the sequence of the digits added, and tends to prevent a second mistake like the first. If the same result is obtained when adding down as was obtained when adding up, the work is presumed to be correct; but if a different result is obtained, repeat the work until the same result is obtained by adding *both* ways. This practice of testing the work to see if it is correct is called *checking,* and the method used in checking is called a *check.* The reader should apply the check by adding down to the two examples of the preceding article.

EXAMPLES

(1) $26.48 + 360.72 + 54.068 + 7.205 + 509.045 = ?$ *Ans.* 957.518.

(2) $19681 + 89320 + 20358 + 33146 + 7508 = ?$ *Ans.* 170013.

(3) $5818 + 8726 + 6791 + 9809 + 12463 + 752 = ?$ *Ans.* 44359.

(4) $6.317 + 49.42 + 17.718 + 5.801 + 83.77 = ?$ *Ans.* 163.026.

(5) The weights of seven bags of alum are 292 pounds, 305 pounds, 301 pounds, 298 pounds, 297 pounds, 307 pounds, and 303 pounds; what is their total weight? *Ans.* 2103 pounds.

(6) What is the weight of six rolls of paper, if the rolls weigh 957 pounds, 1048 pounds, 1075 pounds, 993 pounds, 986 pounds, and 979 pounds? *Ans.* 6038 pounds.

(7) Paid the following amounts for bales of rags: $18.82, $18.94, $19.11, $19.20, $18.85, $18.97. What was the total amount paid? *Ans.* $113.89.

(8) Six barrels of rosin were placed on an elevator; if the barrels weighed 389 pounds, 411 pounds, 395 pounds, 399 pounds, 408 pounds, and 406 pounds, how much must the elevator raise, if it carries in addition to the rosin a man weighing 168 pounds? *Ans.* 2576 pounds.

SUBTRACTION

44. Subtraction means *taking away.* In arithmetic, subtraction is the process of taking one number from another number, or it is the process of finding how much greater one number is than another. If a person has 10 cents and spends 4 cents, he will have 6 cents left. Here 4 cents are taken from 10 cents, and 6 cents are left. The arithmetical operation of taking 4 cents from 10 cents is called **subtraction.** Again, how much greater is 10 cents than 4 cents? If 6 cents are added to 4 cents, the sum is 10 cents; hence, 10 cents is 6 cents greater than 4 cents. The same result will be obtained by subtracting 4 cents from 10 cents.

45. The sign of subtraction is $-$, a short horizontal line; it is read **minus,** and means *less;* it indicates that the number following it is to be subtracted from the number preceding it. Thus, $10 - 4 = 6$; here 4 is to be subtracted from 10, the result being 6; the expression may be read either as 10 *minus* 4 equals 6 or as 10 *less* 4 equals 6. The longer expression, 4 subtracted from 10 equals 6, is also correct.

46. The number subtracted is called the **subtrahend,** and the number from which the subtrahend is subtracted is called the **minuend;** the result is called the **remainder** or **difference.** When it is not desired to be specific regarding the order of the numbers, the word *difference* is generally used; thus, the difference between 4 and 10 or the difference between 10 and 4 is 6. But when the order of the numbers is definitely stated, as 10 minus 4 is 6, 6 is called the remainder, it being what is left after taking 4 from 10. In an expression like $15 - 9 = 6$, 15 is the minuend, 9 is the subtrahend, and 6 is the remainder.

Before explaining the general process of subtraction, the two following principles or laws should be thoroughly understood:

47. Principle I.—*If the same number be added to both minuend and subtrahend, the remainder is unchanged.* For example, $15 - 9 = 6$; if now, 10 be added to both 15 and 9, they become 25

and 19 respectively, and $25 - 19 = 6$, the same remainder as before. The reason is evident; the 10 added to the subtrahend is subtracted from the 10 added to the minuend, thus leaving the minuend and subtrahend the same as before the 10 was added. A like result will be obtained, no matter what number is added; thus, adding 7 to 15 and 9, these numbers become 22 and 16, and $22 - 16 = 6$, as before.

48. Principle II.—*If the remainder be added to the subtrahend, the sum will be the minuend.* For instance, if a stick is 13 feet long and 5 feet are cut off, the length of the stick is then 8 feet. Here $13 - 5 = 8$, and 5 is the subtrahend and 8 is the remainder. But when the two parts of the stick are placed together, they must be equal in length to the original stick; that is, $5 + 8 = 13$, or subtrahend + remainder = minuend. Hence, instead of saying 5 from 13 leaves 8, it will be equally proper to say "what number added to 5 will make 13?" this number is 8; therefore, $13 - 5 = 8$, because $5 + 8 = 13$.

49. The reader will find it greatly to his advantage to reverse the addition table of Art. **33.** Thus, 9 and 6 is 15; 15 less 9 is 6, and 15 less 6 is 9. Again, 8 and 5 is 13; 13 less 8 is 5, and 13 less 5 is 8. He should practice in this manner both addition and subtraction in spare moments, until the result presents itself instantly as soon as the numbers are named.

50. If the right-hand figure of the minuend is smaller than the digit to be subtracted, add 10 to it, subtract, and then subtract 1 from the next left-hand figure of the minuend; thus, $34 - 8 = 26$. Here 10 is added to 4, making 14; 8 from 14 leaves 6; then subtracting 1 from 3, the remainder is 2. This is in accordance with Principle **I**, Art. **47**, since 10 is added to the minuend (really making it 44, but expressed as $30 + 14$) and 10 is added to the subtrahend (really making it 18). The result is correct; since, by Principle **II**, $8 + 26 = 34$; also $18 + 26 = 44$. It is thus seen that $36 - 9 = 27$, $43 - 7 = 36$, $81 - 4 = 77$, etc. The reader should practice these combinations also.

51. Bearing the foregoing in mind, the following is the rule for subtraction:

Rule I.—*Place the numbers as in addition, with the subtrahend under the minuend, and with units under units, tens under tens, etc. or with the decimal points in the same column.*

II. *Beginning with the right-hand digit of the subtrahend, sub-*

tract it from the digit above it in the minuend; do the same with the next digit or figure to the left, proceeding in this manner until all the figures in the subtrahend have been subtracted from the figures above them in the minuend.

III. *If a figure in the minuend is a cipher or is smaller in value than the figure under it in the subtrahend, add* 10 *to it before subtracting, and then carry* 1 *to the next figure of the subtrahend before subtracting it from the figure above.*

IV. *Having found the remainder, add it to the subtrahend, figure by figure, and if the sum equals the minuend, the remainder is very probably correct. This last operation is a check.*

EXAMPLE 1.—From 93875 take 72032.

SOLUTION.—

93875
72032
21843 *Ans.*

EXPLANATION.—Writing the numbers as directed in I of the rule, begin with the right-hand digit and say 2 from 5 is 3, 3 from 7 is 4, write 8 (since 0 from any number leaves the number), 2 from 3 is 1, and 7 from 9 is 2. The remainder, therefore, is 21,843. To check this result, add the remainder to the subtrahend; thus, 3 and 2 is 5, 4 and 3 is 7, 8, 1 and 2 is 3, and 2 and 7 is 9. The sum being the same as the minuend, the work is very probably correct.

EXAMPLE 2.—From $1437.50 take $918.27.

SOLUTION.—

$1437.50
918.27
$ 519.23 *Ans.*

EXPLANATION.—Since 7 cannot be subtracted from 0, add 10 to 0, obtaining 10; then 7 from 10 is 3. Carry 1 to 2 making it 3, and 3 from 5 is 2. Write the decimal point. Then, since 8 cannot be taken from 7, add 10, making 17; and 8 from 17 is 9. Carry 1 to 1 making it 2, and 2 from 3 is 1. Lastly, 9 from 14 is 5. If the remainder be added to the subtrahend, the sum is the minuend. Hence, the correct remainder is $519.23.

EXAMPLE 3.—There are four piles of papers; the first pile contains 986 sheets, the second pile contains 753 sheets, the third pile contains 875 sheets, and the fourth pile contains 1038 sheets; they were all placed in one pile, and 2369 sheets were taken away; how many sheets were left?

SOLUTION.—The first step is to find how many sheets there were all together. This found by adding the number of sheets in each pile, the sum or total being 3652 sheets. The next step is to subtract from this sum the number of sheets that were taken away, the remainder thus found being 1283 sheets. To check, add down, then add the remainder to the subtrahend, obtaining 3652, the minuend. Since the work checks in both cases, it is probably correct.

986 sheets
753
875
1038
3652 sheets
2369
1283 sheets *Ans.*

EXAMPLE 4.—From 19.125 take 9.3125.

SOLUTION.—

$$\begin{array}{r} 19.1250 \\ 9.3125 \\ \hline 9.8125 \end{array} \quad \textit{Ans.}$$

EXPLANATION.—There is no figure in the minuend above the right-hand figure of the subtrahend; but since the subtrahend contains a decimal, it is allowable (for reasons that will be explained later) to annex ciphers to the minuend until it contains the same number of figures in the decimal part that there are in the subtrahend. The subtraction is then performed in the regular manner. Should there be more figures in the decimal part of the minuend than in the decimal part of the subtrahend, annex ciphers to the subtrahend until the decimal parts of the subtrahend and minuend both contain the same number of figures, before subtracting.

52. Although subtraction is a much simpler and easier operation than addition, it is probable that more mistakes are made in subtraction than in addition, the reason being that the operator fails to check by "adding back" and is more inclined to be careless. It is well not to attempt to work too fast at first; try to secure accuracy, and speed will come with practice. This advice applies to every process of computation.

EXAMPLES

(1) From 417.23 take 273.58. *Ans.* 143.65.

(2) From 54.375 take 48.65625. *Ans.* 5.71875.

(3) From 484814 take 258177. *Ans.* 226637.

(4) From 1002070 take 304098. *Ans.* 697972.

(5) 2033.4238 − 1792.3917 = ? *Ans.* 241.0321.

(6) From a pile of pulp weighing 14,253 tons 9,468 tons were sold; how much pulp remained in the pile? *Ans.* 4,785 tons.

(7) Three cars were received containing 58,024 pounds of sulphur; when the stock was cleaned up, mill figures showed that 55,638 pounds had been used; how much had been lost in handling? *Ans.* 2,386 pounds.

(8) To a pile of pulp weighing 4,826 tons, 527 tons were added; how much was left after 3,962 tons had been sold? *Ans.* 1,391 tons.

(9) A bleach liquor tank contained 925 gallons; how much remained after 146 gallons had been used? *Ans.* 779 gallons.

MULTIPLICATION AND DIVISION

MULTIPLICATION

53. In arithmetic, multiplication may be defined as a short method of adding (or finding the sum of) several equal numbers. For instance, suppose there are 6 books, each book containing 1892 pages; how many pages are in the 6 books? To find the total number, 1892 may be written six times as shown at (*a*), and the sum found, which is 11352 pages. By using the process of multiplication, however, the work will be arranged as shown at (*b*), and 1892 is then multiplied by 6, the result being the same as before. Note the great saving in figures even in this simple case. Suppose there had been, say, 576 books each containing 1892 pages; it would then be practically impossible to find the total number of pages by the method shown at (*a*), but the total can easily be found by multiplication.

(*a*)

1892 pages
1892
1892
1892
1892
1892
11352 pages *Ans.*

(*b*)

1892
6
11352 pages *Ans.*

54. The number multiplied (1892 in Art. **53**) is called the **multiplicand**; the number used to multiply the multiplicand (and which shows how many times the multiplicand is to be added) is called the **multiplier** (this is 6 in Art. **53**); the result of the operation of multiplication is called the **product** (in Art. **53,** 11352 is the product).

When it is not desired to be specific and make a special distinction between the multiplicand and multiplier, these two numbers are called **factors**; in Art. **53,** 1892 and 6 are factors of 11352, their product.

55. The sign of multiplication is an oblique (St. Andrew's) cross, which is written between the factors; it is read **times** or **multiplied by.** Thus, $6 \times 8 = 48$ is read either as six *times* eight equals forty-eight or as six *multiplied by* eight equals forty-eight; here 6 and 8 are factors, 6 being the multiplier in the first case and 8 being the multiplier in the second case.

56. Insofar as the product is concerned, it makes no difference which of two factors is considered as the multiplier, since 6 times

8 is the same, for instance, as 8 times 6, the product in both cases being 48; this may be expressed mathematically as $6 \times 8 = 8 \times 6 = 48$.

57. Before one can multiply, it is necessary that he memorize the multiplication table. This may take a little time, but it is absolutely necessary if the reader is to be successful in this subject.

MULTIPLICATION TABLE

1 times 1 is 1	2 times 1 is 2	3 times 1 is 3	4 times 1 is 4
1 times 2 is 2	2 times 2 is 4	3 times 2 is 6	4 times 2 is 8
1 times 3 is 3	2 times 3 is 6	3 times 3 is 9	4 times 3 is 12
1 times 4 is 4	2 times 4 is 8	3 times 4 is 12	4 times 4 is 16
1 times 5 is 5	2 times 5 is 10	3 times 5 is 15	4 times 5 is 20
1 times 6 is 6	2 times 6 is 12	3 times 6 is 18	4 times 6 is 24
1 times 7 is 7	2 times 7 is 14	3 times 7 is 21	4 times 7 is 28
1 times 8 is 8	2 times 8 is 16	3 times 8 is 24	4 times 7 is 32
1 times 9 is 9	2 times 9 is 18	3 times 9 is 27	4 times 9 is 36
1 times 10 is 10	2 times 10 is 20	3 times 10 is 30	4 times 10 is 40
1 times 11 is 11	2 times 11 is 22	3 times 11 is 33	4 times 11 is 44
1 times 12 is 12	2 times 12 is 24	3 times 12 is 36	4 times 12 is 48
5 times 1 is 5	6 times 1 is 6	7 times 1 is 7	8 times 1 is 8
5 times 2 is 10	6 times 2 is 12	7 times 2 is 14	8 times 2 is 16
5 times 3 is 15	6 times 3 is 18	7 times 3 is 21	8 times 3 is 24
5 times 4 is 20	6 times 4 is 24	7 times 4 is 28	8 times 4 is 32
5 times 5 is 25	6 times 5 is 30	7 times 5 is 35	8 times 5 is 40
5 times 6 is 30	6 times 6 is 36	7 times 6 is 42	8 times 6 is 48
5 times 7 is 35	6 times 7 is 42	7 times 7 is 49	8 times 7 is 56
5 times 8 is 40	6 times 8 is 48	7 times 8 is 56	8 times 8 is 64
5 times 9 is 45	6 times 9 is 54	7 times 9 is 63	8 times 9 is 72
5 times 10 is 50	6 times 10 is 60	7 times 10 is 70	8 times 10 is 80
5 times 11 is 55	6 times 11 is 66	7 times 11 is 77	8 times 11 is 88
5 times 12 is 60	6 times 12 is 72	7 times 12 is 84	8 times 12 is 96
9 times 1 is 9	10 times 1 is 10	11 times 1 is 11	12 times 1 is 12
9 times 2 is 18	10 times 2 is 20	11 times 2 is 22	12 times 2 is 24
9 times 3 is 27	10 times 3 is 30	11 times 3 is 33	12 times 3 is 36
9 times 4 is 36	10 times 4 is 40	11 times 4 is 44	12 times 4 is 48
9 times 5 is 45	10 times 5 is 50	11 times 5 is 55	12 times 5 is 60
9 times 6 is 54	10 times 6 is 60	11 times 6 is 66	12 times 6 is 72
9 times 7 is 63	10 times 7 is 70	11 times 7 is 77	12 times 7 is 84
9 times 8 is 72	10 times 8 is 80	11 times 8 is 88	12 times 8 is 96
9 times 9 is 81	10 times 9 is 90	11 times 9 is 99	12 times 9 is 108
9 times 10 is 90	10 times 10 is 100	11 times 10 is 110	12 times 10 is 120
9 times 11 is 99	10 times 11 is 110	11 times 11 is 121	12 times 11 is 132
9 times 12 is 108	10 times 12 is 120	11 times 12 is 132	12 times 12 is 144

The product of any number and 0 is 0 ($9 \times 0 = 0$, $167 \times 0 = 0$, etc.); this is evident, since the sum of any number of 0's cannot make an integer.

It will be noted by reference to the table that the product of any number and 1 is the number itself; thus, $409 \times 1 = 409$, since

409 × 1 is 409 1's, which is, of course, 409. Note, also, that the product of any number and 10 is the number itself with a cipher (0) added at the right; thus, 7 × 10 = 70, 526 × 10 = 5260, etc. Note, again, that the product of 11 and any number not greater than 9 is the number repeated; thus, 3 × 11 = 33, 6 × 11 = 66, 9 × 11 = 99, etc.

The reader should repeat the different parts of the table to himself at odd times until it becomes so firmly impressed on his memory that as soon as any two numbers are named, their product will instinctively name itself.

58. To Multiply any Number by a Single Digit.—Multiply 31415927 by 7. Here 31415927 is the multiplicand and 7, the multiplier, is written under the right-hand figure of the multiplicand. Draw a line under the factors, as shown, and multiply the right-hand figure of the multiplicand by 7 the multiplier, obtaining 7 × 7 = 49. Write the unit figure of the product under the unit figure of the multiplicand, and carry 4, the tens figure of this product. Then say 7 times 2 is 14, to which add 4, the figure carried, making 18; write 8 as shown and carry 1. Say 7 times 9 is 63, add the 1 carried, making 64; write 4 and carry 6. Say 7 times 5 is 35 and 6 (the figure carried) is 41; write 1 and carry 4. Say 7 times 1 is 7 and 4 (the figure carried) is 11; write 1 and carry 1. Say 7 times 4 is 28 and 1 is 29; write 9 and carry 2. Say 7 times 1 is 7 and 2 is 9; write 9 and there is nothing to carry. Lastly, say 7 times 3 is 21, which write. Every figure in the multiplicand has now been multiplied by the multiplier, 7, and the product is 219,911,489.

```
 31415927
        7
-----------
219911489  Ans.
```

Had the multiplier been 70, 700, 7000, etc., the process would have been exactly the same, except that after the product was found, as many ciphers would have been annexed to the product as there were ciphers to the right of the right-hand digit of the multiplier; thus, 31,415,927 × 7000 = 219,911,489,000. The work is shown in the margin. First multiply by 7 as before; then to the product, annex three ciphers, because there are three ciphers to the right of the right-hand digit of the multiplier.

```
 31415927
     7000
-----------
219911489000  Ans.
```

59. To Multiply When the Multiplier Contains Two or More Digits.—Place the multiplier under the multiplicand, with the

right-hand digit of the multiplier under the right-hand digit of the multiplicand. Multiply by the right-hand digit of the multiplier and write the product figure by figure under the multiplier, as shown in the margin. This result is called the *first partial product.* Note that after multiplying 9 by 2 there is 1 to carry; then say 2 times naught is naught and 1 is 1, which write as shown. Now multiply by the next figure to the left of 2, in this case 4. Say 4 times 5 is 20; write the cipher one place to the left of the right-hand figure of the first partial product, thus bringing the cipher under the figure multiplied by. Continue the multiplication by 4, obtaining 1712380, which is called the *second partial product.* The third figure to be used as a multiplier is 0, and since any number multiplied by 0 is 0, write a cipher one place to the left of the right-hand figure of the second partial product, which brings it directly under the cipher in the multiplier. Now multiply by the next figure, 7, of the multiplier. Say 7 times 5 is 35, write 5 alongside the cipher and carry 3; this brings the 5 under the figure used as a multiplier, and makes the third row of figures 29966650, the *third partial product,* which is equal to 428095 × 70. Finally, multiply by 3, the left-hand digit of the multiplier, and the result is the *fourth partial product,* the right-hand figure of which is written under 3, the number multiplied by. Now adding the four partial products, the sum is 15,857,494,990, which is the *entire product,* or the result sought.

```
  428095
   37042
  ------
  856190
 1712380
29966650
1284285
--------
15857494990   Ans.
```

If there are ciphers to the right of the multiplicand or multiplier or both, pay no attention to them until after the product has been found as just described. Then annex to the entire product as many ciphers as there are ciphers to the right of either or both factors. For instance, to multiply 526700 by 205000, arrange as shown in the margin, with the right-hand *digits* of the multiplicand and multiplier under each other. Multiply 5267 by 205, the product being 1079735; there are two ciphers to the right of one factor and three to the right of the other factor; hence, annex 2 + 3 = 5 ciphers to the right of the entire product, which is thus found to be 107,973,500,000.

```
  526700
  205000
  ------
 26335
105340
------
107973500000   Ans.
```

60. Rule.—*Write the multiplier under the multiplicand with the right-hand digits under each other. Beginning with the right-hand digit of the multiplier, and proceeding to the left, multiply the upper factor by each figure of the lower factor, or multiplier, writing the right-hand figure of each partial product under the figure used as a multiplier. Then add the partial products, and the sum will be the entire product.*

61. Check for Multiplication.—The best way to check multiplication is to employ the process called "casting out nines." This consists in dividing (the operation of dividing will be considered in the next article) the two factors by 9, multiplying the remainders, and if the product is greater than 9, divide that by 9; note the remainder. Then divide the entire product by 9, and if the remainder is the same as that first obtained, the work is very probably correct. If the two remainders differ, however, then the work is wrong, some mistake having been made. Instead of dividing by 9, the remainder may be found by adding the digits; if the sum is greater than 10, add the digits of the sum, proceeding in this manner until a single digit has been found, which will be the remainder when the number is divided by 9. Thus, consider the number 7854; the sum of the digits is $7 + 8 + 5 + 4 = 24$; $2 + 4 = 6$, and 6 is the remainder when 7854 is divided by 9.

Applying this check to the first example of Art. **59,** the sum of the digits in the multiplicand is $4 + 2 + 8 + 9 + 5 = 28$, $2 + 8 = 10$, and $1 + 0 = 1$; the sum of the digits in the multiplier is $3 + 7 + 4 + 2 = 16$, and $1 + 6 = 7$; then $1 \times 7 = 7$. The sum of the digits in the entire product is $1 + 5 + 8 + 5 + 7 + 4 + 9 + 4 + 9 + 9 = 61$, and $6 + 1 = 7$. Since the remainders are both 7, the work is very probably correct. When adding the digits in this manner, it is not necessary to add any 9's; thus, in the foregoing, the remainder for the multiplicand is $4 + 2 + 8 + 5 = 19$ or 1, and the remainder for the product is $1 + 5 + 8 + 5 + 7 + 4 + 4 = 34$, and $3 + 4 = 7$, both results being the same as obtained before.

Applying this check to the second example of Art. **59,** $5 + 2 + 6 + 7 = 20$, or 2; $2 + 5 = 7$; $2 \times 7 = 14$, and $1 + 4 = 5$; $1 + 7 + 7 + 3 + 5 = 23$, and $2 + 3 = 5$. Since the remainders are the same, the work is very probably correct.

The reader is strongly advised to apply this check in every case.

EXAMPLES

(1) $7854 \times 2038 = ?$ *Ans.* 16,006,452.

(2) $230258 \times 90057 = ?$ *Ans.* 20,736,344,706.

(3) $31831 \times 31416 = ?$ *Ans.* 1,000,002,696.

(4) $543836 \times 4688 = ?$ *Ans.* 2,549,503,168.

(5) $197527 \times 98743 = ?$ *Ans.* 19,504,408,561.

(6) $295369 \times 700405 = ?$ *Ans.* 206,877,924,445.

(7) The average consumption of coal by a mill per year is 28,750 tons; if the average cost per ton is $7.00, what is the annual cost to the mill for coal? *Ans.* $201,250.

(8) During a certain period, a mill consumed 686 tons of alum; if the price paid for the alum was $49.00 per ton, how much was the total amount paid for the alum? *Ans.* $33,614.

(9) What is the value of 13,908 cords of wood at $11.00 per cord? *Ans.* $152,988.

(10) How much must be paid for 12 cans of dye stuff, if each can weighs 47 pounds and the dye stuff is worth $19.00 per pound? *Ans.* $10,716.

(11) At different times a certain mill sold paper as follows: 27,848 pounds at 14 cents per pound; 17,005 pounds at 18 cents per pound; 9,990 pounds at 19 cents per pound; and 36,476 pounds at 15 cents per pound. How much was received from these sales? *Ans.* $14,329.12.

DIVISION

62. Division means a partition, a separating into parts. In arithmetic, division is the process of finding how many times larger one number is than another; thus, since 24 is 6 times 4, 24 is 4 times as large as 6 or 6 times as large as 4. Division may also be defined as the process of separating a number into a required number of equal parts; thus, 24 may be separated into 6 equal parts of 4 each or 4 equal parts of 6 each.

(*a*)

11352
1892
9460
1892
7568
1892
5676
1892
3784
1892
1892
1892
0000

Just as multiplication is a short process or method of adding equal numbers so division is a short process or method of subtracting continuously until the remainder is 0 or less than the subtrahend. For example, referring to Art. **53,** suppose there are 11,352 pages in a certain number of books each containing 1892 pages, and it is required to find the number of books. The work might be done as shown at (a) in the margin, subtracting 1892 from 11352, then subtracting 1892 from the remainder, continuing this process until the remainder becomes 0 or less than the subtrahend.

(*b*)

1892)11352(6
11352
0

In this case, the remainder is 0; and as the subtraction was performed 6 times, there are 6 books. By the process of division, as shown at (b), 1892 is *contained* 6 times in 11352, because $1892 \times 6 = 11352$. Note the great saving of figures in the second method. Had it been known that the total number of pages was 11,352, the number of books was 6, and it were required to find the number of pages in each book, it would be necessary to subtract 6, by the method shown at (a), 1892 times, which is practically impossible.

In multiplication, the object to be attained is to find the product of two numbers (factors); in division, the object is to divide a number into two factors, one of them being given.

63. The number that is to be divided into two factors is called the **dividend;** the given factor, which is divided into the dividend, is called the **divisor;** the other factor, which is obtained by dividing the dividend by the divisor, is called the **quotient;** anything that is left over after the division has been performed is called the **remainder.** In (b), Art. **62,** 11,352 is the dividend, 1892 is the divisor, 6 is the quotient, and the remainder is 0. Whenever the remainder is 0, the division is said to be *exact.*

64. There are several signs for division, the principal one being a colon (:) or a colon with a short horizontal line between the dots (÷). When either of these two signs occurs between two numbers, it means that the number on the *left* is to be divided by the number on the *right;* thus, $24 \div 6$ means that 24 is to be divided by 6, 24 being the dividend and 6 the divisor. In some cases, a vertical line is used in place of the regular sign of division; thus, 24|6. The vertical line is seldom used between two numbers; it is most frequently used when the product of several numbers is to be divided by the product of several other numbers; thus, the product of 124, 49, and 75 divided by the product of 84 and 112 may be indicated as shown in the margin, the product of the numbers to the left of the vertical line being the dividend, and the product of the numbers to the right being the divisor. Most commonly, however, in cases of this kind, a horizontal line is used, the number or numbers above the line being divided by the number or numbers below it; thus, $\frac{24}{6}$ is read 24 *over* 6, and means 24 divided by 6; also, $\frac{124 \times 49 \times 75}{84 \times 112}$ means that the

124 | 84
49 | 112
75

product of 124, 49, and 75 is to be divided by the product of 84 and 112. An inclined line is also frequently used; thus 24/6 means 24 divided by 6.

65. Short Division.—When the divisor is not greater than 12, it is customary to employ what is called **short division.** The process is best illustrated by an example. For instance, 543,832:8 = ? Write the divisor to the left of the dividend with a curved line between, as shown in the margin, and draw a straight line under the dividend. Since 8 is greater than 5, the left-hand digit of the dividend, consider the first two figures, 54. Now find what number multiplied by 8 will make 54 or whose product subtracted from 54 will be less than 8; since $8 \times 6 = 48$ and $8 \times 7 = 56$, this number is 6, and $54 - 48 = 6$. Write 6 under 54 for the first figure of the quotient, and also write 6, the remainder, above and to the right of 4, as shown. This last 6 belongs to the same order as the 4 in 54 and the 3 that follows 4 is of the next lower order; hence, combine the 6 and 3, and call the number 63. Now find what number multiplied by 8 will make 63 or whose product subtracted from 63 will be less than 8; this number is 7, since $8 \times 7 = 56$ and $63 - 56 = 7$. Write 7 under 3 for the second figure of the quotient, and also write 7, the remainder, as shown. The next number to be divided is 78, the 7 being prefixed to the fourth figure of the dividend, which is the figure of the next lower order. Here $8 \times 9 = 72$, and $78 - 72 = 6$; write 9 under 8 for the third figure of the quotient and write 6, the remainder, as shown. Prefixing 6 to 3, the next figure of the dividend, $8 \times 7 = 56$, $63 - 56 = 7$; hence, write 7 for the fourth figure of the quotient and write 7, the remainder, as shown. Finally, $8 \times 9 = 72$, and there is no remainder; hence, write 9 for the fifth figure of the quotient. As there are no more figures in the dividend, the quotient sought is 67,979. That this is correct may be proved by multiplying the quotient by the divisor, the result being $67979 \times 8 = 543832$, the dividend.

8)5 4⁶3⁷8⁶3⁷2
6 7 9 7 9

In practice, the remainders would not be written in the manner indicated in the foregoing—they would be simply carried mentally. The process would then be as follows: 8 into 54, 6 times and 6 over; 8 into 63, 7 times and 7 over; 8 into 78, 9 times and 6 over; 8 into 63, 7 times and 7 over; 8 into 72, 9 times and no re-

mainder. Suppose it were required to divide the above number, 543,832 by 9. Say 9 into 54, 6 times and nothing over; 9 into 3 no times; 9 into 38, 4 times and 2 over; 9 into 23, 2 times and 5 over; 9 into 52, 5 times and 7 over. Since there are no more figures in the dividend, the quotient is 60,425 and 7 remainder. That by result is correct may be proved by multiplying the quotient by the divisor and adding the remainder to the product; thus, $60425 \times 9 = 543825$, and $543825 + 7 = 543832$. Now note that the remainder is the same as that obtained in Art. **61** by adding the digits; thus $5 + 4 + 3 + 8 + 3 + 2 = 25$, and $2 + 5 = 7$.

$9)\overline{543832}$
$60425 + 7$ *rem.*

For reasons that will be explained later, it is customary to write the remainder over the divisor, with a line between, and annex this expression to the quotient. In the last example, $543832 \div 9 = 60425\frac{7}{9}$. *Ans.* This last expression may be read sixty thousand four-hundred-twenty-five and seven over nine.

EXAMPLES

(1) $197527 \div 11 = ?$ *Ans.* 17,957.

(2) $527324 \div 7 = ?$ *Ans.* 75,332.

(3) $900725 \div 6 = ?$ *Ans.* $150,120\frac{5}{6}$.

(4) $\frac{49503163}{12} = ?$ *Ans.* $4,125,263\frac{7}{12}$.

(5) $1580216/4 = ?$ *Ans* 395,054.

(6) $4350688 \div 3 = ?$ *Ans.* $1,450,229\frac{1}{3}$.

(7) $2072623/10 = ?$ *Ans.* $207,262\frac{3}{10}$.

Note.—To divide a number by 10, write all the figures except the last for the quotient; the last figure will be the remainder (see example 7, above).

(8) Since there are 12 inches in one foot, how many feet are equivalent to 237 inches? *Ans.* $19\frac{9}{12}$ feet.

(9) How many nickels are equal in value to $3.45, one nickel being equal to 5 cents? *Ans.* 69 nickels.

(10) Twelve of anything make a dozen, and twelve dozen make a gross. How many dozen balls of twine are in a shipment containing 5076 balls? also, how many gross were in the shipment? *Ans.* 423 dozen; $35\frac{3}{12}$ gross.

(11) There are 8 pints in one gallon; how many gallons are equivalent to 22,222 pints? *Ans.* $2777\frac{6}{8}$ gallons.

(12) One yard is equal to three feet; how many yards are contained in 63360 inches? *Ans.* 1760 yards.

(13) A quire of paper contains 24 sheets. How many quires are in a pile of 1784 sheets? *Ans.* $74\frac{8}{24}$ quires.

66. Long Division.—When the divisor is greater than 12, the process called **long division** is used; this is best explained by an example. For instance, what is the quotient when 64,903,358 is divided by 386? Write the divisor to the right of the dividend, with a line (either straight or curved) between, and draw a line under the divisor, as shown. Since the divisor contains 3 figures, compare it with the number made up of the first 3 figures of the dividend, in this case, 649, which call the *first trial dividend.* Note that 649 is larger than 386, which is nearly equal to 400; calling it 400, it is seen that 400 is contained in 649, 1 time, and 1 is thus the first figure of the quotient, which is written under the divisor. Now multiply the divisor by 1, the figure of the quotient just found, and write the product under the first three figures of the dividend, draw a line under it, and subtract, obtaining a remainder of 263. Annex to this remainder the next figure of the dividend, in this case 0, and divide 2630, which is the *new*, or *second, trial dividend*, by 386, the divisor, which call 400 as before, obtaining 6 for the second figure of the quotient. Multiply the divisor by 6, the figure of the quotient last found, and write the product, 2316, under 2630; subtract as before, obtaining 314 as a remainder, to which annex the next figure of the dividend, 3 in this case, making the new, or *third, trial dividend* 3143. To divide 3143 by 386, note that $8 \times 400 = 3200$, a number slightly larger than 3143; but as 386 is smaller than 400, try 8 for the third figure of the quotient. Multiplying 386 by 8, the product is 3088, which subtracted from 3143, leaves a remainder of 55, to which annex the next figure of the dividend, in this case 3, making the new, or *fourth, trial dividend* 553. The next figure of the quotient is evidently 1, and the next, or *fifth, trial dividend* is 1675. Dividing 1675 by 400, the next figure of the quotient is 4; multiplying 386 by 4 and subtracting the product from 1675, the remainder is 131, to which annex the next (in this case, the last) figure of the dividend, obtaining 1318 for the new, or *sixth, trial dividend.* Dividing 1318 by 400, the

```
64903358)386
386        168143 80/386   Ans.
2630
2316
 3143
 3088
  553
  386
  1675
  1544
   1318
   1158
    160
```

next figure of the quotient is 3; the remainder after multiplying the divisor by 3 is 160. As there are no more figures in the dividend, the division of 160 by 386 is indicated by writing 386 under 160 with a line between. The quotient, therefore, is $168{,}143\frac{160}{386}$.

In the foregoing, the number 400, which was used in place of 386 to determine the different figures of the quotient, is called the *trial divisor*. If the second figure of the divisor is 5 or a larger digit, increase the first figure of the divisor by 1, use the result thus obtained as a trial divisor, and proceed as in short division to obtain the next figure of the quotient. But, if the second figure of the divisor is less than 5, use the first figure of the divisor for a trial divisor. In case there is any doubt as to whether the figure of the quotient so obtained is correct, multiply the second figure of the divisor by the figure thus obtained in the quotient and add the amount to be carried to the product of this figure and the first figure of the divisor, comparing the result with the first two figures of the trial dividend. Thus, in the foregoing example, to determine whether to try 7 or 8 for the third figure of the quotient $8 \times 8 = 64$, $8 \times 3 = 24$, and $24 + 6 = 30$; since 30 is smaller than 31, the first two figures of the trial dividend, try 8 for the third figure of the quotient. It may be remarked that the quotient, $168143\frac{160}{386}$, is read one hundred sixty-eigh thousand one hundred forty-three and one hundred sixty over three hundred eighty-six.

67. Check for Division.—To check division, cast out 9's from the dividend, divisor, quotient, and remainder; the product of the remainders for the divisor and quotient plus the remainder for the remainder should equal the remainder for the dividend, but if not, a mistake has been made. Thus, in the example of Art. 66, disregarding the 9's, $6 + 4 + 3 + 3 + 5 + 8 = 29$, and the remainder is 2 for the dividend. The remainder for the divisor is $3 + 8 + 6 = 17$, and $1 + 7 = 8$; the remainder for the quotient is $1 + 6 + 8 + 1 + 4 + 3 = 23$, and $2 + 3 = 5$; the remainder for the remainder is $1 + 6 = 7$; then $8 \times 5 = 40$, or 4, and $4 + 7 = 11$, $1 + 1 = 2$, the same remainder as was found for the dividend; hence, the work is probably correct.

```
1529918746)43607
130821        35084 10758/43607  Ans.
 221708
 218035
   367374
   348856
    185186
    174428
     10758
```

As another example, divide 1,529,918,746 by 43607. Since

the second figure of the divisor is 3, a digit smaller than 5, use 4 for the trial divisor. Since the first 5 figures of the dividend make a smaller number than the five figures of the divisor, use the first six figures of the dividend for the first trial dividend. Since 4 is contained in 15, 3 times, 3 is the first figure of the quotient. The second figure of the quotient is easily seen to be 5, and the second remainder is 3673; annexing 7, the next figure of the dividend, the third trial dividend, 36737, is smaller than the divisor; hence, write a cipher (0) for the third figure of the quotient, and annex 4, the next figure of the dividend, making the fourth trial dividend 367374. While $36 \div 4 = 9$, 9 is evidently too large, since $43 \times 9 = 387$; consequently, try 8 for the fourth figure of the quotient. The fifth figure is 4, and the remainder is 10758, which is written over the divisor, as shown. Applying the check, $1 + 5 + 2 + 1 + 8 + 7 + 4 + 6 = 34$, and $3 + 4 = 7$; $4 + 3 + 6 + 7 = 20$, or 2; $3 + 5 + 8 + 4 = 20$, or 2; $1 + 7 + 5 + 8 = 21$, and $2 + 1 = 3$; then $2 \times 2 = 4$, and $4 + 3 = 7$, the same remainder as was obtained for the dividend; hence, the work is probably correct.

68. Rule I.—*Write the divisor to the right of the dividend, with a line between, and draw a line under the divisor.*

II. *Determine the trial divisor as previously described and divide it into the first trial dividend for the first figure of the quotient; multiply the divisor by this figure, subtract the product from the trial dividend, and annex the next figure of the dividend for a new trial dividend. Divide the second trial dividend by the trial divisor for the second figure of the quotient. Proceed in this manner until all the figures of the dividend have been used.*

III. *If any trial dividend is smaller than the divisor, write a cipher for the corresponding figure of the quotient, and annex the next figure of the dividend for a new trial dividend.*

IV. *If there is a remainder, write it over the divisor with a line between, and annex this expression to the quotient.*

EXAMPLES

(1) Divide 31415927 by 4726. *Ans.* $6647\frac{2205}{4726}$.

(2) $40073836 \div 8018 = ?$ *Ans.* $4997\frac{7890}{8018}$.

(3) $\frac{712946}{519} = ?$ *Ans.* $1373\frac{359}{519}$.

(4) Divide 43560 by 209. *Ans.* $208\frac{88}{209}$.

(5) $30159681 \div 5307 = ?$ *Ans.* 5683.

(6) $\frac{4,396,652,679}{86193} = ?$ *Ans.* $51009\frac{33942}{86193}$.

(7) Divide 2,189,404,900 by 29,950. *Ans.* 73,102.

(8) According to Bessel, the diameter of the earth at the equator is 41,847,192 feet; what is the diameter in miles, one mile containing 5280 feet? *Ans.* $7925\frac{3192}{5280}$ miles.

(9) How many reams of 480 sheets each are contained in 75,960 sheets of writing paper? *Ans.* $158\frac{120}{480}$ reams.

(10) How many bales of rags can be made up from 238,996 pounds of rags, if the bales average 596 pounds each? *Ans.* 401 bales.

(11) 12,656 pounds of paper is to be put up in reams of 25 pounds each; how many reams will it make? *Ans.* $506\frac{6}{25}$ reams.

(12) The freight bill on a shipment of pulpwood called for payment on 246,782 pounds; if the average weight of a cord is 4450 pounds, how many cords are there? *Ans.* $55\frac{2032}{4450}$ cords.

SOME PROPERTIES OF NUMBERS

DIVISIBILITY OF NUMBERS

69. As previously stated, the factors of the product of two numbers are the two numbers which, when multiplied together produce the product. If more than two numbers are multiplied, the product has more than two factors; thus, $4 \times 7 \times 12 \times 25 = 8400$, and 8400 may be considered to have as its factors 4, 7, 12, and 25. Since $12 = 3 \times 4$, and $25 = 5 \times 5$, 8400 also has as its factors 3, 4, 4, 5, 5, and 7, because $3 \times 4 \times 4 \times 5 \times 5 \times 7 = 8400$. These factors may be combined in any way to form other factors; thus, $3 \times 5 = 15$, $4 \times 5 = 20$, and $4 \times 15 \times 20 \times 7 = 8400$, or $4 \times 5 \times 5 = 100$, and $3 \times 4 \times 7 \times 100 = 8400$, etc.

70. A **multiple** of a number (the given number) is a certain number of times the given number; thus, 24 is a multiple of 6, 6 being the given number, because 4 times 6 is 24; it is a multiple of 8, because 3 times 8 is 24; it is a multiple of 12, because 2 times 12 is 24. In other words, any number that can be expressed as the product of two or more factors is a multiple of any one of the

factors or of the product of two or more of its factors. For instance, $7854 = 2 \times 3 \times 7 \times 11 \times 17$; it is, therefore, a multiple of any one of these numbers and may be exactly divided by any one of them, and when it has been divided by one of them, the quotient may be exactly divided by any one of the remaining factors; thus, $7854 \div 11 = 714$, and 714 may be exactly divided by any of the remaining factors, since $714 \div 2 = 357$; $357 \div 3 = 119$; $119 \div 7 = 17$, the last factor. A multiple of several factors may be exactly divided by the product of any number of those factors; thus, $7854 \div 11 \times 17 = 7854 \div 187 = 42$; $7854 \div 3 \times 7 \times 11 = 7854 \div 231 = 34$; etc.

When a number can be exactly divided by another number, the first number is said to be **divisible** by the second number; if, however, there is a remainder after the division, then the first number is not divisible by the second. For example, 84 is divisible by 2, 3, 4, 6, 7, 12, 14, 21, 28, and 42, and by no other numbers except itself (84) and 1; 84 is also, of course, a multiple of these numbers.

71. An odd number is one whose last (right-hand) figure is 1, 3, 5, 7, or 9; 71, 423, 625, 1007, 1649 are odd numbers.

An **even number** is one whose last figure is 0, 2, 4, 6, or 8; 640, 972, 1774, 31416, and 2008 are even numbers.

Any even number is divisible by 2; this may be considered as another definition of an even number. Thus, any of the above even numbers are divisible by 2.

Any number ending in 5 is divisible by 5; thus, 635, 895, etc. are divisible by 5.

Any number ending in 0 is divisible by 5 and by 10; thus, $640 = 64 \times 10 = 64 \times 2 \times 5$. Since any number ending in 0 is a multiple of 10, it has for two of its factors 2 and 5; it is therefore divisible by 2, 5, and $2 \times 5 = 10$. See Art. **70.**

72. A number that is not divisible by any number except itself and 1 is called a **prime number** or a **prime**; all prime numbers except 2 are odd numbers, since any even number is divisible by 2. The prime numbers less than 100 are 1, 2, 3, 5, 7, 11, 13, 17, 19, 23, 29, 31, 37, 41, 43, 47, 53, 59, 61, 67, 71, 73, 79, 83, 89, 97.

A number that is divisible by some number other than itself and 1 is called a **composite number.** Composite numbers may be odd or even, and may always be expressed as the product of two or more prime numbers; thus, $84 = 2 \times 2 \times 3 \times 7$; $105 = 3 \times 5$

$\times 7$; $69 = 3 \times 23$; etc. When the factors are prime numbers, they are called **prime factors.**

(*a*) Any number ending in two ciphers is divisible by 4 and by 25; thus, $62100 = 621 \times 100 = 621 \times 4 \times 25$, since $100 = 4 \times 25$.

(*b*) Any number ending in three ciphers is divisible by 8 and by 125; thus, $621000 = 621 \times 1000 = 621 \times 8 \times 125$, since $1000 = 8 \times 125$.

Since $100 = 2 \times 50 = 20 \times 5$, a number ending in two more ciphers is divisible by 2, 4, 5, 10, 20, 25, and 50.

Since $1000 = 2 \times 500 = 4 \times 250 = 5 \times 200 = 8 \times 125 = 10 \times 100 = 20 \times 50 = 40 \times 25$, a number ending in three or more ciphers is divisible by 2, 4, 5, 8, 10, 20, 40, 50, 100, 125, 200, 250, and 500.

(*c*) If the sum of the digits of any number is a multiple of 3, the number is divisible by 3; when adding the digits, it is not necessary to add 3, 6, or 9. Thus, 31416 is divisible by 3, because $1 + 4 + 1 = 6$, a multiple of 3; similarly, 2350976 is not divisible by 3, because $2 + 5 + 7 = 14$, which is not a multiple of 3.

(*d*) If the number is even and the sum of the digits is a multiple of 3, the number is divisible by 6; thus, 31416 is divisible by 6, because it is even and the sum of the digits is a multiple of 3. Similarly, 790108 is not divisible by 6, because $7 + 1 + 8 = 16$, which is not a multiple of 3. Had the number been 780108, $7 + 8 + 1 + 8 = 24$, a multiple of 3, and the number is divisible by 6. No odd number is divisible by 6.

(*e*) If the sum of the digits is a multiple of 9, the number is divisible by 9. Thus, 2,072,322 is divisible by 9, because $2 + 7 + 2 + 3 + 2 + 2 = 18$, a multiple of 9; and 3,263,016 is not divisible by 9, because $3 + 2 + 6 + 3 + 1 + 6 = 21$, which is not a multiple of 9; it is a multiple of 3, however, and since the number is even, it is divisible by 3 and by 6.

(*f*) A number is divisible by 4 when the last two figures are divisible by 4; thus, 4692, 543,836, 127,324, etc. are all divisible by 4, because 92, 36, and 24, the last two figures of each number are divisible by 4. But, 1742, 67,583, 98,782, etc. are not divisible by 4.

(*g*) A number is divisible by 8 when the last three figures are divisible by 8; 1752, 57064, 31416, etc. are divisible by 8, because 752, 064, and 416, the last three figures of each number are divisible by 8. But 1852, 57164, and 31426 are not divisible by 8.

CANCELATION

73. When one composite number is to be divided by another composite number or when the product of several numbers is to be divided by the product of several other numbers, the work can frequently be shortened by employing the process called **cancelation.** Cancelation means dividing out or canceling equal factors from the dividend and divisor. For example, suppose 216 were to be divided by 36. According to Art. **72,** 216 is divisible by 4 and by 9, and 36 is also divisible by 4 and by 9. Indicating the division by $\frac{216}{36}$, divide both dividend and divisor by 4, and the result is $\frac{54}{9}$; again dividing both dividend and divisor, this time by 9, the result is $\frac{6}{1} = 6$, and 6 is the quotient of $216 \div 36$.

In practice, the work would be performed as follows: $\dfrac{\overset{\overset{6}{\cancel{54}}}{\cancel{216}}}{\underset{\underset{1}{\cancel{9}}}{\cancel{36}}} = 6.$

Here 216 is divided by 4, a line is drawn through it, thus striking out or *canceling* 216, and the quotient, 54, is written above it; 36 is also divided by 4, canceled, and 9, the quotient, is written below it. Since 54 and 9 have a common factor, 9, 54 is divided by 9, canceled, and the quotient, 6, is written above it; 9 is divided by 9, canceled, and the quotient, 1, is written under it. Since $6 \div 1 = 6$, the quotient of $216 \div 36$ is 6. The same result might have been obtained by resolving the dividend and divisor into their prime factors and canceling those that are common; thus, $\frac{216}{36} = \frac{\cancel{2} \times \cancel{2} \times 2 \times \cancel{3} \times \cancel{3} \times 3}{\cancel{2} \times \cancel{2} \times \cancel{3} \times \cancel{3}} = 2 \times 3 = 6.$ When the quotient is 1, it is not customary to write it when canceling.

Canceling the same factor in both dividend and divisor does not alter the value of the quotient.

74. If there are several factors in both dividend and divisor, the process is similar; any factor common to both dividend and divisor may be canceled. For example, divide $136 \times 54 \times 117$ by $26 \times 51 \times 40$. Writing the dividend over the divisor, with a line between,

$$\frac{\overset{\overset{\cancel{17}}{\cancel{136}}}{\cancel{26}} \times \overset{\overset{9}{\cancel{27}}}{\cancel{54}} \times \overset{9}{\cancel{117}}}{\underset{\underset{\cancel{13}}{\cancel{17}}}{\cancel{26}} \times \underset{\underset{\cancel{17}}{\cancel{51}}}{\cancel{54}} \times \underset{5}{\cancel{40}}} = \frac{9 \times 9}{5} = \frac{81}{5} = 16\tfrac{1}{5}.$$

By Art. **72,** 136 is divisible by 8; 40 is also a multiple of 8; hence, cancel 136 and 40, writing the quotients as shown. Since 26 and 54 are divisible by 2, cancel and write the quotients as shown. By Art. **72,** 51 is divisible by 3, and since 27 is a multiple of 3, cancel and write the quotients as shown. Since there is a 17 above the line and another below it, cancel the 17's. By Art **72,** 117 is divisible by 9; it is equal to 9×13; hence, divide the 13 below the line into 117. As there are no more common factors, the original expression is equal to $\frac{9 \times 9}{5}$, being the product of all the uncanceled factors above the line divided by the product of all the uncanceled factors below the line.

As another example, what is the value of

$$\frac{224 \times 5700 \times 189 \times 85}{250 \times 456 \times 21 \times 17} = ?$$

Here,

$$\begin{array}{cccc} & 2 & & \\ & 10 & 9 & \\ 28 & 570 & 63 & 17 \\ \hline 224 \times & 5700 \times & 189 \times & 85 \\ \hline 250 \times & 456 \times & 21 \times & 17 \\ 25 & 57 & 7 & \\ 5 & & & \end{array} = 28 \times 2 \times 9 = 504.$$

By Art. **72,** 224 and 456 are both divisible by 8; hence, cancel and write the quotients as shown. Cancel the 10 in 250 and 5700, leaving 25 and 570. Cancel the 57 in the divisor into 570 in the dividend. Cancel 5 in 25 and 10, leaving 5 and 2, and cancel the 5 into 85, leaving 17, which cancels 17 in the divisor. 189 and 21 are both divisible by 3, and 63 is a multiple of 7. Canceling as shown, all the factors in the divisor have been canceled, leaving $28 \times 2 \times 9 = 504$ for the quotient. That this is correct may be proved by actual multiplication and division; thus $224 \times 5700 \times 189 \times 85 = 20{,}511{,}792{,}000$; $250 \times 456 \times 21 \times 17 = 40{,}698{,}000$; and $20{,}511{,}792{,}000 \div 40{,}698{,}000 = 504$.

Rule.—*Cancel the factors that are common to both dividend and divisor, and divide the product of all the factors that remain in the dividend by the product of all the factors that remain in the divisor.*

EXAMPLES

(1) $\dfrac{39 \times 152 \times 87 \times 96}{19 \times 6 \times 29 \times 42 \times 13} = ?$ *Ans.* $27\frac{3}{7}$.

(2) $\dfrac{30 \times 40 \times 50 \times 60 \times 70}{15 \times 25 \times 35 \times 45 \times 55} = ?$ *Ans.* $7\frac{2}{3}\frac{5}{3}$.

(3) $\dfrac{24 \times 44 \times 64 \times 84 \times 104}{33 \times 32 \times 42 \times 52} = ?$ *Ans.* 256.

(4) $\dfrac{231 \times 328 \times 7200}{21 \times 64 \times 525} = ?$ *Ans.* $773\frac{1}{7}$.

(5) $\dfrac{31416 \times 55 \times 192}{121 \times 56 \times 85} = ?$ *Ans.* 576.

(6) $\dfrac{5236 \times 630 \times 128 \times 192}{196 \times 32 \times 144 \times 90} = ?$ *Ans.* $997\frac{1}{3}$.

ARITHMETIC

(PART 1)

EXAMINATION QUESTIONS

(1) Express in figures the following numbers: (*a*) ten million nineteen thousand forty-two; (*b*) seventy thousand six hundred five; (*c*) five hundred sixty-two hundredths.

(2) Express the following numbers in Roman notation: (*a*) 4068; (*b*) 44; (*c*) 657,903; (*d*) 1920; (*e*) 1888.

(3) What is the sum of \$18.04, \$1.57, \$197.85, \$36.43, and \$360.52? *Ans.* \$614.41.

(4) Seven barrels, with their contents, weigh respectively 297 pounds, 417 pounds, 226 pounds, 388 pounds, 293 pounds, 185 pounds, and 313 pounds; if they are all hoisted in an elevator at one time, and the elevator weighs 2309 pounds, together with two men, one weighing 148 pounds and the other 187 pounds, what is the total weight lifted? *Ans.* 4763 pounds.

(5) From a pile of pulp weighing 12,882 tons, 2057 tons were removed on a certain day and 3836 tons on another day; how many tons remained in the pile? *Ans.* 6989 tons.

(6) If 256,405 be subtracted from a certain number and the remainder is 700,999; (*a*) what is the number? (*b*) What number must be subtracted from 1,001,010 to give a remainder of 660,019?

Ans. { (*a*) 957,404. (*b*) 339,991.

(7) What is the product of 461, 217 and 865. Check the result by casting out 9's. *Ans.* 86,532,005.

(8) If the quotient is 5077, the divisor is 6345, and the remainder is 2609, what is the dividend? Check by casting out 9's. *Ans.* 32,216,174.

(9) If the dividend is 4,511,856, the quotient is 2803, and the remainder is 1829, what is the divisor? *Ans.* 1609.

(10) There are 5280 feet in a mile; (*a*) how many miles in 408,806 feet? (*b*) How many feet in 1894 miles?

Ans. { (*a*) $77\frac{2}{5}\frac{4}{8}\frac{6}{0}$ miles. (*b*) 10,000,320 feet.

(11) There are five numbers: (1) 840, (2) 231, (3) 1728, (4) 2618, and (5) 1215; (*a*) which of these numbers are odd? (*b*) which are even? (*c*) which are divisible by 3? (*d*) by 6; (*e*) by 9; (*f*) by 12?

(12) Referring to the last question, which of the numbers are divisible (*a*) by 2? (*b*) by 4? (*c*) by 8? (*d*) by 5?

(13) Find the value of $\frac{5236 \times 9 \times 45 \times 26}{91 \times 135 \times 88}$ by cancelation.

Ans. 51.

(14) A hogshead contains 63 gallons; how many hogsheads are equal to 20,610 gallons? *Ans.* $327\frac{9}{63}$ hogsheads.

(15) Find the value of $\frac{1309 \times 1728 \times 448}{256 \times 88 \times 154}$ by cancelation.

Ans. $291\frac{1}{11}$.

ARITHMETIC

(PART 2)

GREATEST COMMON DIVISOR AND LEAST COMMON MULTIPLE

75. Greatest Common Divisor.—The **greatest common divisor** of two or more numbers is the largest number that will exactly divide all of them. Thus, the greatest common divisor (usually abbreviated G.C.D.) of 36 and 48 is 12, because 12 is the largest number that will divide 36 and 48—it is the largest common factor of 36 and 48; also, 36 is the G.C.D. of 72, 108, and 144, because it is the largest common factor of those numbers.

To find the G.C.D. of two numbers, find the product of their common factors; the work is usually arranged as follows: Find the G.C.D. of 54 and 216. Write the numbers as shown in the margin, separating them by a comma, and then proceed as in short division. By Art. **72,** 54 and 216 are both divisible by 9; divide as shown, obtaining 6 and 24 for the quotients. Both 6 and 24 are divisible by 6, the quotients being 1 and 4. The only factor common to 1 and 4 is 1, which has no effect on the G.C.D. Since 54 and 216 have the common factors 9 and 6, they are divisible by the product of these common factors, and the G.C.D. of 54 and 216 is $9 \times 6 = 54$. To prove the work, $54 \div 54 = 1$, and $216 \div 54 = 4$.

9	54, 216
6	6, 24
	1, 4

G.C.D. $= 6 \times 9 = 54$ *Ans.*

76. To find the G.C.D. of more than two numbers, proceed in exactly the same way as in Art. **75,** remembering that the divisors must divide *all* the numbers. Thus, find the G.C.D. of 270, 405, 675, and 945. Arranging the work as shown, it is seen that all the numbers are multiples of 9; hence, divide by 9. The quotients are all divisible by 5; hence, divide

9	270, 405, 675, 945
5	30, 45, 75, 105
3	6, 9, 15, 21
	2, 3, 5, 7

G.C.D. $= 9 \times 5 \times 3 = 135$. *Ans.*

by 5. The quotients in the third line are all multiples of 3; hence, divide by 3. The quotients in the fourth line have no common factor; therefore, the G.C.D. is $9 \times 5 \times 3 = 135$. To prove this, divide each of the original numbers by 135; the quotients will be the same as in the bottom line.

77. It frequently happens that the common factors are not readily seen; in such cases, proceed as in the following example. Find the G.C.D. of 238 and 391. Write the larger number, and draw a vertical line on its right; then write the smaller number and draw another vertical line. The first vertical line is the sign of division, but the second vertical line is merely a line of separation. Now divide 391 by 238, and write the quotient to the right of the second vertical line. The remainder is 153, which is divided into 238, the quotient being written under the first quotient. The remainder from the second division is 85, which is divided into 153, giving a remainder of 68, the quotient being written under the preceding quotient. Dividing 85 by 68, the remainder is 17. Lastly, 68 divided by 17 gives a quotient of 4 and a remainder 0; and 17, the divisor that gave the remainder 0, is the G.C.D. of 238 and 391.

391	238	1
238	153	1
153	85	1
85	68	1
68	17	4
68		
0		

G.C.D. = 17. *Ans.*

As another example, find the G.C.D. of 31,416 and 1,400,256. Arranging the work as before, the first quotient is 44, and the remainder is 17,952, which is divided into 31,416. The second quotient is 1, and the second remainder is 13,464, which is divided into 17,952. The third quotient is 1, and the third remainder is 4,488, which is contained in 13,464 3 times, and there is no remainder. Therefore, the G.C.D. of 31,416 and 1,400,256 is 4488.

1400256	31416	44
125664	17952	1
143616	13464	1
125664	13464	3
17952	0	
13464		
4488		

G.C.D. = 4488. *Ans.*

It is seldom necessary to find the G.C.D. of more than two numbers. The first method should be used whenever possible; but, when the numbers are large or the common factors are not apparent, then use the second method. Observe that the process must be carried out until a remainder of 0 is obtained. If the numbers have no common divisor, the G.C.D. will be 1. In such case, the numbers are said to be *prime to each other*, though

both may be composite numbers. For example, 91 and 136 are both composite, but they are prime to each other, as is evident when the greatest common divisor is found to be 1, in accordance with the work as shown in the margin.

136	91	1
91	90	2
45	1	45
45		
0		

G.C.D. = 1. *Ans.*

EXAMPLES

(1) Find the G.C.D. of 40, 60, 80, and 100. *Ans.* 20.
(2) Find the G.C.D. of 70, 175, 210, and 245. *Ans.* 35.
(3) Find the G.C.D. of 2387 and 1519. *Ans.* 217.
(4) Find the G.C.D. of 4059 and 6390. *Ans.* 9.
(5) Find the G.C.D. of 11433 and 444. *Ans.* 111.
(6) Find the G.C.D. of 364089 and 457368. *Ans.* 3009.
(7) Find the G.C.D. of 1016752 and 991408. *Ans.* 176.

78. Least Common Multiple.—A **common multiple** of several numbers is a number that is divisible by those numbers; thus, 840 is a common multiple of 40 and 56.

The **least common multiple** of two or more numbers is the smallest number that is divisible by those numbers; thus, 280 is the least common multiple of 40 and 56; it is the smallest number that is divisible by both 40 and 56.

The product of two or more numbers is a common multiple of the numbers; for the want of a special name, this will be called the *prime multiple* of the numbers. The prime multiple may be the least common multiple, and will be such if no two of the numbers have a common factor; thus, the prime multiple of 91 and 36 is $91 \times 36 = 3276$, and this is also the least common multiple of 91 and 36. The words least common multiple are usually abbreviated to L.C.M. If the two numbers have a common factor, it may be canceled from the numbers, and the L.C.M. will then be the product of this common factor and the remaining factors of the numbers. Thus, 56 and 72 have the common factor 8; dividing 56 and 72 by 8, the quotients are 7 and 9, respectively; then the L.C.M. is $8 \times 7 \times 9 = 56 \times 9 = 7 \times 8 \times 9 = 7 \times 72 = 504$. Note that 504 is equal to 56×9 and to 72×7; hence, it is divisible by both 56 and 72. Since 8, the common factor, is the greatest common factor, that is, the G.C.D., of 56 and 72, it follows that the L.C.M. of two numbers may be found by

dividing one of the numbers by their G.C.D. and multiplying the other number by the quotient. For instance, referring to example (3) at the end of Art. **77,** the G.C.D. of 2387 and 1519 is 217; $1519 \div 217 = 7$; then $2387 \times 7 = 16{,}709$, the L.C.M. of 1519 and 2387. Or, $2387 \div 217 = 11$, and $1519 \times 11 = 16{,}709$.

79. To find the L.C.M. of more than two numbers, proceed in much the same way as in finding the G.C.D. An example will illustrate the process. Find the L.C.M. of 16, 24, 30, and 32. Arrange the work as shown. Since all the numbers contain the common factor 2, divide it out. In the first line of quotients,

2	16, 24, 30, 32
4	8, 12, 15, 16
2	2, 3, 15, 4
3	1, 3, 15, 2
	1, 1, 5, 2

L.C.M. $= 2 \times 4 \times 2 \times 3 \times 5 \times 2 = 480$. *Ans.*

three of the numbers are multiples of $4 (= 2 \times 2)$, but the other number contains no factor in common with 4; hence, divide by 4. The second line of quotients contains two numbers that are multiples of 2; hence, divide by 2. The third line of quotients contains two numbers that are multiples of 3; hence, divide by 3. The numbers in the fourth line of quotients are all prime to each other, and no further division is possible. The product of the divisors and the factors in the last line of quotients is the L.C.M., which is equal to $2 \times 4 \times 2 \times 3 \times 5 \times 2 = 480$.

When finding the L.C.M., divide out all factors that are common to two or more numbers until a row of quotients is obtained that are prime to one another. As another example, find the L.C.M. of 15, 27, 55, and 99. There is no factor common to all

5	15, 27, 55, 99
11	3, 27, 11, 99
3	3, 27, 1, 9
3	1, 9, 1, 3
	1, 3, 1, 1

L.C.M. $= 5 \times 11 \times 3 \times 3 \times 3 = 1485$. *Ans.*

the numbers; but, since 15 and 55 are multiples of 5, divide by 5. Since 11 and 99 are multiples of 11, divide by 11. The remainder of the work is evident. Note that whenever a number is not divisible by a divisor, the number is brought down into the line of quotients. The L.C.M. is $5 \times 11 \times 3 \times 3 \times 3 = 1485$.

If the numbers are such that their factors are not apparent, find the L.C.M. of two of them, and then find the L.C.M. of this result and the third number; then the L.C.M. of the second result and the fourth number, and so on; the last result will be the L.C.M. of all the numbers. For instance, to find the L.C.M. of 893, 1387, and 1121, first find the L.C.M. of 893 and 1387 (or 1121). Proceeding as described in Art. **78,** first find the G.C.D. of 893 and 1387. The work is shown in the margin, and the G.C.D. is 19. Then, $893 \div 19 = 47$, and $1387 \times 47 = 65189$, the L.C.M. of 893 and 1387. Now find in the same way the L.C.M. of 1121 and 65,189. The work for this is also shown in the margin. The G.C.D. of these two numbers is 19; $1121 \div 19 = 59$; and $65189 \times 59 = 3{,}846{,}141$, which is the L.C.M. of 893, 1387, and 1121.

1387	893	1
893	494	1
494	399	1
399	380	4
95	19	5
95		
0		

65189	1121	58
5605	1026	6
9139	95	1
8968	76	1
171	19	4
95		
76		
76		
0		

$1121 \div 19 = 59$

$65189 \times 59 = 3846151$. *Ans.*

It may here be remarked that the greatest common divisor and the least common multiple are of importance in connection with the reduction, addition, and subtraction of fractions, as will shortly appear.

EXAMPLES

(1) Find the L.C.M. of 28, 49, 63, and 84. *Ans.* 1764.
(2) Find the L.C.M. of 12, 14, 16, and 18. *Ans.* 1008.
(3) Find the L.C.M. of 15, 20, 25, and 30. *Ans.* 300.
(4) Find the L.C.M. of 4, 8, 12, 16, and 20. *Ans.* 240.
(5) Find the L.C.M. of 1955 and 4403. *Ans.* 506,345.
(6) Find the L.C.M. of 119, 204, 272. *Ans.* 5712.
(7) Find the L.C.M. of 442, 234, and 1001. *Ans.* 306,306.

FRACTIONS

DEFINITIONS

80. When an integer or a unit is divided into equal parts, one or more of these parts is called a **fraction** of the integer or unit. If, for example, a straight stick be cut into two pieces of the same length, one piece is equal to the other, and either is called *one-half* of the stick. If the stick is cut into three equal pieces or parts, one of them is called *one-third* of the stick; if cut into four equal parts, one of them is called *one-fourth* of the stick; if cut into five equal parts, one of them is called *one-fifth* of the stick; etc. The expressions one-half, one-third, one-fourth, etc. are fractions. More than one part is denoted by writing the number before the name of the part; thus, two-thirds means two one-thirds, three-fourths means three one-fourths, etc.

81. To express a fraction with figures, it is necessary to write two numbers, one to show into how many parts the integer or unit has been divided, and the other to show how many of these parts are taken or considered. For instance,

$\frac{1}{2}$ means one-half, and indicates one of two equal parts
$\frac{1}{3}$ means one-third, and indicates one of three equal parts
$\frac{1}{4}$ means one-fourth, and indicates one of four equal parts
$\frac{2}{3}$ means two-thirds, and indicates two of three equal parts
$\frac{4}{5}$ means four-fifths, and indicates four of five equal parts
$\frac{7}{12}$ means seven-twelfths, and indicates seven of twelve equal parts, etc., etc.

82. It will be observed that a fraction is expressed in one of the ways used to indicate division. The number below the line is called the **denominator,** because it denominates, or names, the number of parts into which the integer has been divided.

The number above the line is called the **numerator,** because it numerates, or counts, the number of the equal parts that are taken or considered.

83. An expression like $\frac{3}{4}$ may be interpreted in two ways: First, it is 3 times $\frac{1}{4}$ of a unit. For example, one dollar is equal to 100 cents; one-fourth of a dollar is $100 \div 4 = 25$ cents; and three-fourths of a dollar is 3×25 cents $= 75$ cents. Here one dollar is the unit. Second, it is one-fourth of three times the unit. If the unit is one dollar, three times the unit is 3 dollars or 300 cents, and one-fourth of 3 times the unit is 300 cents $\div 4 = 75$

cents, the same result as before. In the first case, $\frac{3}{4}$ is a fraction; in the second case, it is an indication of division.

84. Except when the denominator is 1, 2 or 3, a fraction is read by pronouncing the name of the numerator and then pronouncing the name of the denominator after adding *ths*; thus, $\frac{3}{7}$ is read three-sevenths, $\frac{11}{16}$ is read eleven-sixteenths, $\frac{49}{125}$ is read forty-nine one-hundred-twenty-fifths, etc. But $\frac{13}{21}$ is read thirteen-twenty-firsts; $\frac{29}{42}$ is read twenty-nine-forty-seconds; $\frac{37}{53}$ is read thirty-seven fifty-thirds, etc.

85. If two fractions have the same numerator, but a different denominator, the fraction whose denominator is the smaller is the larger; thus $\frac{3}{4}$ is larger than $\frac{3}{5}$, because one-fifth of anything is smaller than one-fourth of it; hence, 3 one-fifths is smaller than 3 one-fourths For example, three-fourths of a dollar is 75 cents, but three-fifths of a dollar is 60 cents, since one-fifth of a dollar is 100 cents $\div$ 5 = 20 cents, and 3 $\times$ 20 cents = 60 cents.

86. The numerator of a fraction may be greater than the denominator, in which case, the value of the fraction is found by dividing the numerator by the denominator; thus, $\frac{12}{3} = 4$, the value of the fraction; $\frac{18}{9} = 2$, the value of the fraction; etc. If the numerator is equal to the denominator, the value of the fraction is 1; thus, $\frac{17}{17} = 1$, $\frac{5}{5} = 1$, etc. This is evident, since if a dollar is divided into, say, 5 equal parts, 5 of these parts make up the dollar. If the numerator is less than the denominator, the value of the fraction is less than 1.

87. A **proper fraction** is one whose numerator is smaller than its denominator; its value is always less than 1. Thus, $\frac{3}{7}$, $\frac{5}{12}$, $\frac{15}{16}$, etc. are proper fractions.

An **improper fraction** is one whose numerator is equal to or greater than its denominator. Thus, $\frac{8}{8}$, $\frac{7}{3}$, $\frac{36}{24}$, etc. are improper fractions.

When it is not desired to specify the numerator and denominator separately, they are called the **terms** of the fraction; thus, the terms of the fraction $\frac{23}{42}$ are 23 and 42.

When a fraction is joined to an integer, as in the expression $14\frac{5}{8}$, the expression is called a mixed number. Here $14\frac{5}{8}$ means 14 and $\frac{5}{8}$ more; it has the same meaning as $14 + \frac{5}{8}$. In reading a mixed number, the word *and* is used as above, but the plus sign is always understood, though not written or spoken; thus, $5\frac{2}{3}$ is read five and two-thirds, and means $5 + \frac{2}{3}$. Mixed numbers

always occur whenever the dividend is not a multiple of the divisor; for instance, the quotients found in examples (3), (4), (6), and (7) of Art. **65** are mixed numbers.

88. In printing and writing, in order to save space, fractions are frequently expressed by using the inclined line instead of the horizontal line; thus, $3/4 = \frac{3}{4}$, $113/147 = 1\frac{1}{4}\frac{3}{7}$, etc. In such cases, a hyphen is sometimes written between the integer and the fraction of a mixed number; thus, 14-3/8 = $14\frac{3}{8}$; the hyphen shows that the fraction belongs to the integer.

When it is desired to indicate that the fraction is to be pronounced and it is not desired to write the name in full, the fraction is written as usual and the ending of the name of the denominator is annexed; thus, $2/3$rds, $7/12$ths, $15/22$ds, $23/31$sts, mean two-thirds, seven-twelfths, fifteen twenty-seconds, twenty-three thirty-firsts, etc. The only exception is $\frac{1}{2}$, which is always read one-half, and is always so written and printed.

REDUCTION OF FRACTIONS

89. To **reduce** a fraction is to change its form without changing its value; to *change its form* means to alter its numerator and denominator. It was shown in Arts. **82** and **83** that a fraction may be regarded as an expression of division, the numerator being the dividend and the denominator the divisor. In Art. **73,** it was shown that canceling the same factor in both dividend and divisor does not alter the value of the quotient; hence, dividing both numerator and denominator of a fraction by the *same* number does not alter the value of the fraction. For example, $\frac{18}{24} = \frac{9}{12} = \frac{3}{4}$. Here both 18 and 24 are first divided by 2, the quotients being 9 and 12, respectively. Since 9 and 12 contain the common factor 3, divide both 9 and 12 by 3, the quotients being 3 and 4, respectively. The numerator and denominator of the given fraction might both have been divided by their greatest common divisor, 6, and the same final result, $\frac{3}{4}$, obtained.

That $\frac{18}{24}$ths = $\frac{3}{4}$ths is easily shown. Thus, a gross is 144; $\frac{18}{24}$ths of a gross is 18 times $\frac{1}{24}$th of 144; $\frac{1}{24}$th of 144 is 144 ÷ 24 = 6, and $\frac{18}{24}$ths is 18 × 6 = 108. But $\frac{3}{4}$ths of a gross is 3 times $\frac{1}{4}$th of 144; $\frac{1}{4}$th of 144 = 36, and $\frac{3}{4}$ths of 144 is 3 × 36 = 108. In the same way, it is shown that $\frac{9}{12}$ths of 144 is 108. Therefore, $\frac{18}{24} = \frac{9}{12} = \frac{3}{4}$.

90. Multiplying both numerator and denominator by the *same* number does not alter (change) the value of the fraction; this is evident, since both terms of the new fraction may be divided by the number used as a multiplier, thus obtaining the original fraction. For instance, $\frac{3\times 6}{4\times 6} = \frac{18}{24}$, which, as has just been shown is equal to $\frac{3}{4}$. Similarly, $\frac{2\times 7}{5\times 7} = \frac{14}{35}$.

91. When the fraction is reduced to lower terms, that is, when the numerator and denominator are made smaller by division, the process is called **reduction descending.** When the fraction is reduced to higher terms, that is, when the numerator and denominator are made larger by multiplication, the process is called **reduction ascending.**

92. When the fraction has been reduced by division until the numerator and denominator are prime to each other (have no common factor), the fraction is said to be in its **lowest terms;** thus, $\frac{3}{4}$, $\frac{7}{12}$, $\frac{16}{25}$, etc. are fractions in their lowest terms. When a fraction in its lowest terms, it is in its **simplest form.**

93. To reduce a fraction to its lowest terms, cancel all factors that are common to the numerator and denominator. If the factors are not apparent, and it is desired to make sure that the fraction is in its lowest terms, find the greatest common divisor, if any, of the numerator and denominator and divide both terms by it.

Example 1.—Reduce $\frac{168}{252}$ to its lowest terms.

Solution.—Since both terms are multiples of 4, divide them by 4, and $\frac{168}{252} = \frac{42}{63}$. Both terms of the new fraction are multiples of 7; hence, dividing by 7, $\frac{42}{63} = \frac{6}{9}$. Both terms of the new fraction are multiples of 3; hence, dividing by 3, $\frac{6}{9} = \frac{2}{3}$. Since the terms are now prime to each other, the fraction is in its lowest terms. In practice, the work would be arranged as follows: $\frac{168}{252} = \frac{42}{63} = \frac{6}{9} = \frac{2}{3}$. *Ans.*

Example 2.—Reduce $\frac{5127}{6936}$ to its simplest form.

Solution.—Since both terms are multiples of 8 (see Art. **72**), divide them by 8, and $\frac{5127}{6936} = \frac{641}{867}$. Apparently, the terms have no common factor, but to make certain, apply the process of finding the G.C.D. of 6409 and 8671; in this case, the G.C.D. is 377. Dividing both terms by 377, $\frac{6409}{8671} = \frac{17}{23}$. *Ans.*

94. To reduce a fraction to another fraction having a given denominator, divide the given denominator by the denominator of the given fraction and multiply the terms of the fraction by the quotient. For example, to reduce $\frac{3}{8}$ to a fraction having 96

for its denominator; $96 \div 8 = 12$, and $\frac{3 \times 12}{8 \times 12} = \frac{36}{96}$. *Ans.*

The reason for dividing the given denominator by the denominator of the given fraction is evident, since the quotient must be the number by which the denominator of the given fraction must be multiplied in order to equal the given denominator. This operation is of importance in adding and subtracting fractions.

95. To reduce an integer to an improper fraction having a given denominator, multiply the integer by the given denominator, and the product will be the numerator of a fraction having the given denominator. For instance, reduce 7 to a fraction having 12 for its denominator. Here $7 \times 12 = 84$, and the required fraction is $\frac{84}{12}$. That this result is correct may be proved by dividing the numerator by the denominator, the quotient being 7, the original number. This result may also be obtained in another way; thus, 7 is evidently equal to $\frac{7}{1}$, and $\frac{7 \times 12}{1 \times 12} = \frac{84}{12}$.

96. To reduce a mixed number to an improper fraction, multiply the integral part by the denominator of the fraction, add the numerator to the product, and write the sum over the denominator. This is evidently correct, since the mixed number is obtained by dividing the dividend (numerator) by the divisor (denominator), and the remainder is written over the divisor. Thus, reduce $14\frac{3}{8}$ to an improper fraction. Here $14 \times 8 = 112$; $112 + 3 = 115$; hence, $14\frac{3}{8} = \frac{115}{8}$. Regarding $\frac{115}{8}$ ths as an indication of dividing 115 by 8, $115 \div 8 = 14\frac{3}{8}$.

97. A common denominator of two or more fractions is a common multiple of the denominators of the fractions; and the **least common denominator** is the least common multiple of the denominators. For instance, the least common denominator of $\frac{2}{3}$, $\frac{1}{4}$, and $\frac{5}{8}$ is 24, because 24 is the L.C.M. of 3, 4, and 8.

98. To reduce two or more fractions to fractions having a least common denominator, find the L.C.M. of the denominators; then, by the method of Art. **94,** reduce each fraction to a fraction having this denominator.

EXAMPLE 1.—Reduce $\frac{2}{3}$, $\frac{1}{4}$, and $\frac{5}{8}$ to fractions having a least common denominator.

SOLUTION.—The L.C.M. of 3, 4, and 8 is 24; $\frac{2}{3} = \frac{16}{24}$; $\frac{1}{4} = \frac{6}{24}$; and $\frac{5}{8} = \frac{15}{24}$. *Ans.*

EXAMPLE 2.—Reduce $\frac{14}{60}$, $\frac{57}{92}$, and $\frac{290}{161}$ to fractions having a least common denominator.

SOLUTION.—The L.C.M. of 69 and 92 is 276; the L.C.M. of 276 and 161 is 1932, which is therefore the L.C.M. of 69, 92, and 161. Then, $1932 \div 69 = 28$, and $\frac{44}{69} \times \frac{28}{28} = \frac{1232}{1932}$; $1932 \div 92 = 21$, and $\frac{57}{92} \times \frac{21}{21} = \frac{1197}{1932}$; $1932 \div 161 = 12$, and $\frac{120}{161} \times \frac{12}{12} = \frac{1440}{1932}$. Therefore, the required fractions are $\frac{1232}{1932}$, $\frac{1197}{1932}$, and $\frac{1440}{1932}$. *Ans.*

EXAMPLE 3.—Which fraction is the larger, $\frac{85}{133}$ or $\frac{100}{156}$?

SOLUTION.—To determine which is the larger, reduce them to a common denominator; then the one that has the greater numerator is the larger. Since $\frac{100}{156} = \frac{25}{39}$; reduce $\frac{85}{133}$ and $\frac{25}{39}$ to a common denominator, preferably, the least common denominator. Since 133 and 39 have no common factor, their L.C.M. is their product, or $133 \times 39 = 5187$; then $\frac{85}{133} = \frac{3315}{5187}$, and $\frac{25}{39} = \frac{3325}{5187}$. Therefore, $\frac{100}{156}$ is the larger fraction. *Ans.*

EXAMPLE 4.—There are 1760 yards in a mile; what fraction of a mile is 550 yards?

SOLUTION.—Since there are 1760 yards in one mile, the number of miles or parts of a mile in 550 yards is $550 \div 1760 = \frac{550}{1760} = \frac{55}{176} = \frac{5}{16}$. Therefore, 550 yards is $\frac{5}{16}$ths of a mile. *Ans.*

EXAMPLE 5.—Which is the greater 500 yards or $\frac{765}{}$ths of a mile?

SOLUTION.—Since there are 1760 yards in a mile, 500 yards $= \frac{500}{1760} = \frac{50}{176} = 25/88$ mile; $\frac{765}{} = \frac{15}{53}$ mile. Reducing these fractions to a common denominator, the L.C.M. of 88 and 53 is $88 \times 53 = 4664$; $\frac{15}{53} = \frac{1320}{4664}$, and $\frac{25}{88} = \frac{1325}{4664}$. Therefore, 500 yards is a little greater than $\frac{765}{}$ths of a mile. *Ans.*

EXAMPLES

(1) Reduce to its lowest terms $\frac{112}{364}$. *Ans.* $\frac{4}{13}$.

(2) Reduce to its lowest terms $\frac{231}{441}$. *Ans.* $\frac{11}{21}$.

(3) Reduce to its lowest terms $\frac{1677}{4368}$. *Ans.* $\frac{43}{112}$.

(4) Express 11 as a fraction having 24 for its denominator. *Ans.* $\frac{264}{24}$.

(5) Reduce $12\frac{5}{16}$ to an improper fraction. *Ans.* $\frac{197}{16}$.

(6) Reduce $852\frac{35}{128}$ to an improper fraction. *Ans.* $\frac{109181}{128}$.

(7) Which is the larger $\frac{90}{105}$ or $\frac{105}{123}$? *Ans.* $\frac{105}{123}$.

(8) Which is the larger $\frac{77}{96}$ or $\frac{78}{97}$? *Ans.* $\frac{78}{97}$.

(9) Which is the larger $\frac{15}{32}$ or $\frac{16}{33}$? *Ans.* $\frac{16}{33}$.

(10) Reduce to their least common denominator $\frac{3}{8}$, $\frac{5}{6}$, $\frac{5}{12}$, and $\frac{7}{16}$.
Ans. $\frac{18}{48}$, $\frac{40}{48}$, $\frac{20}{48}$, $\frac{21}{48}$.

(11) Reduce to their least common denominator $\frac{2}{5}$, $\frac{1}{3}$, $\frac{5}{9}$, $\frac{11}{14}$, and $\frac{13}{18}$.
Ans. $\frac{252}{630}$, $\frac{210}{630}$, $\frac{350}{630}$, $\frac{495}{630}$, $\frac{455}{630}$.

(12) A ream of writing paper contains 480 sheets; 328 sheets is what fraction of a ream? *Ans.* $\frac{41}{60}$th ream.

(13) How many sheets are equal to $\frac{7}{12}$ths of a ream of writing paper?
Ans. 280 sheets.

(14) Which is the larger, 200 sheets of writing paper or $\frac{27}{64}$th ream?
Ans. $\frac{27}{64}$th ream.

(15) How many sheets difference are there between 400 sheets of writing paper and $\frac{27}{32}$ds ream? *Ans.* 5 sheets.

(16) If a car of sulphur weighs 40,000 pounds, what fraction of a car-load is 26,800 pounds? *Ans.* $\frac{67}{100}$th car-load.

ADDITION OF FRACTIONS

99. The sum of $\frac{5}{16}$ and $\frac{9}{16}$ is $\frac{14}{16}$, because 5 one-sixteenths and 9 one-sixteenths = 14 one-sixteenths = $\frac{14}{16}$ths. Like numbers (see Art. 8) can be added, but unlike numbers cannot be added; thus, 4 feet cannot be added to 6 inches, but 4 feet can be added to 6 feet and 4 inches can be added to 6 inches. In an expression like $\frac{5}{16} + \frac{9}{16}$, the denominators show what is to be added, in this case 16ths, and the numerators show how many of the things indicated by the denominator are to be added; it is exactly the same operation as adding 5 dollars and 9 dollars and obtaining 14 dollars for the sum. In one case, 16ths are added, and in the other case dollars are added. Consequently, if the denominators are alike, the sum of several fractions may be found by adding the numerators and writing the sum over the denominator. For instance, $\frac{5}{16} + \frac{9}{16} + \frac{13}{16} = \frac{5 + 9 + 13}{16} = \frac{27}{16} = 1\frac{11}{16}$, the last result being obtained by dividing the numerator by the denominator.

100. If the denominators are unlike, the fractions cannot be added until they have been reduced to a common denominator, preferably, the least common denominator; thus, $\frac{2}{3}$ cannot be added to $\frac{4}{5}$, because 2 one-thirds + 4 one-fifths has no particular meaning as it stands—the fractions have no common unit. But, $\frac{2}{3} = \frac{10}{15}$, $\frac{4}{5} = \frac{12}{15}$, and $\frac{10}{15} + \frac{12}{15} = \frac{22}{15} = 1\frac{7}{15}$. That this result is correct is readily seen. Thus, a bushel of wheat weighs 60 pounds; hence, $\frac{2}{3}$ds of a bushel weighs 40 pounds; $\frac{4}{5}$ths of a bushel weighs 48 pounds; and the combined weight is 40 + 48 = 88 pounds. Now $\frac{1}{15}$th of 60 pounds is 4 pounds, and $\frac{22}{15}$ths of 60 pounds is $22 \times 4 = 88$ pounds, the same result as before.

Similarly, to add 4 feet and 6 inches, it is necessary to express the feet in inches or the inches in feet before adding. Since there are 12 inches in 1 foot, there are $12 \times 4 = 48$ inches in 4 feet; and 48 inches + 6 inches = 54 inches. If it is desired to express the sum in feet, then it is necessary to divide 54 by 12, obtaining $4\frac{6}{12} = 4\frac{1}{2}$ feet. The same result might have been obtained by dividing the number of inches, 6, by 12, thus obtaining a fraction of a foot, which can then be added to the number of feet; thus, $6 \div 12 = \frac{6}{12} = \frac{1}{2}$, that is, one-half of a foot, and 4 feet + $\frac{1}{2}$ foot = $4 + \frac{1}{2} = 4\frac{1}{2}$ feet.

101. Rule.—I. *If the fractions have a common denominator, add the numerators and write the sum over the denominator.*

II. *If the fractions do not have a common denominator, reduce them to fractions having a common denominator, preferably, their least common denominator, and then add.*

III. *If the sum is an improper fraction, reduce it to an integer or mixed number by dividing the numerator by the denominator.*

IV. *If the sum is a proper fraction or a mixed number containing a proper fraction, reduce the fraction to its lowest terms.*

EXAMPLE.—Add $\frac{7}{12}$, $\frac{11}{16}$, $\frac{17}{20}$, and $\frac{13}{24}$.

SOLUTION.—Here the least common denominator is 240. Then, $\frac{7}{12} + \frac{11}{16} + \frac{17}{20} + \frac{13}{24} = \frac{140}{240} + \frac{165}{240} + \frac{204}{240} + \frac{130}{240} = \frac{140 + 165 + 204 + 130}{240} = \frac{639}{240} = 2\frac{159}{240} = 2\frac{53}{80}$. *Ans.*

In practice, the work would be arranged as follows:

$$\frac{7}{12} + \frac{11}{16} + \frac{17}{20} + \frac{13}{24} = \frac{140 + 165 + 204 + 130}{240} = 2\frac{53}{80}. \quad \textit{Ans.}$$

Here the denominator of the sum is written only once, the numerators of the fractions being written above it and added. It is seen at a glance that the sum of the numerators is greater than the denominator; hence, they are added separately and the improper fraction reduced to a mixed number, with the fractional part in its lowest terms.

102. The Sum of Two Fractions.—When it is desired to add two fractions whose denominators are unlike and have no common factor, that is, when these are prime to each other, proceed as follows: Add $\frac{11}{13}$ and $\frac{19}{24}$. Here the denominators have no common factor; hence, the least common denominator is the product of the denominators. This product divided by either denominator gives the other denominator, which is used as a multiplier for the numerator. Therefore, multiply the denominators for a new denominator; multiply the numerator of the first fraction by the denominator of the second, and the numerator of the second fraction by the denominator of the first and add the products. Thus, $\frac{11}{13} + \frac{19}{24} = \frac{11 \times 24 + 19 \times 13}{13 \times 24} = \frac{264 + 247}{312}$

$= \frac{511}{312} = 1\frac{199}{312}$. *Ans.*

Even if the denominators have a common factor, this method of adding two fractions is generally to be preferred, because it is quicker than reducing the fractions to their least common denominator.

103. To add mixed numbers, add the integral and fractional parts separately; if the sum of the fractions is an improper fraction, reduce it to a mixed number and add to the sum of the integers.

EXAMPLE.—What is the sum of $23\frac{3}{8}$, $31\frac{13}{16}$, $28\frac{15}{32}$, and $25\frac{43}{64}$?

SOLUTION.—Arrange the numbers in the same manner as for addition of integers. The least common denominator of the fractions is evidently 64; hence, reduce the fractions to fractions having 64 for a denominator, writing them as shown. Adding the numerators, the sum is 149, and the sum of the fractions is $\frac{149}{64} = 2\frac{21}{64}$. Carry the 2 into the column of integers, which add, obtaining 109, to which annex the fraction, obtaining $109\frac{21}{64}$ for the sum of the mixed numbers. *Ans.*

$$\begin{array}{rcl} 23\frac{3}{8} & = & \frac{24}{64} \\ 31\frac{13}{16} & = & \frac{52}{64} \\ 28\frac{15}{32} & = & \frac{30}{64} \\ 25\frac{43}{64} & = & \frac{43}{64} \\ \hline 109\frac{21}{64} & & \frac{149}{64} = 2\frac{21}{64} \end{array}$$

The sum might have been obtained by reducing the mixed numbers to improper fractions and then adding by the regular rule; but this takes longer and there is greater liability of making a mistake.

As another example, add $4\frac{2}{5}$, $5\frac{1}{3}$, $7\frac{11}{12}$, and $6\frac{5}{8}$. The least common denominator is 120. Reducing the fractions to fractions having 120 for a denominator, the sum of the numerators is 273, which divided by 120 gives a quotient of $2\frac{1}{4}\frac{1}{0}$. Carrying the 2 to the sum of the integers and annexing the fraction, the sum of the mixed numbers is $24\frac{1}{4}\frac{1}{0}$; thus, $2 + 6 + 7 + 5 + 4 = 24$, and $24 + \frac{1}{4}\frac{1}{0} = 24\frac{1}{4}\frac{1}{0}$.

$$\begin{array}{rcl} 4\frac{2}{5} & = & \frac{48}{120} \\ 5\frac{1}{3} & = & \frac{40}{120} \\ 7\frac{11}{12} & = & \frac{110}{120} \\ 6\frac{5}{8} & = & \frac{75}{120} \\ \hline 24\frac{1}{10} & & Ans. \end{array}$$

EXAMPLES

(1) Add $\frac{3}{4}$, $\frac{7}{10}$, $\frac{5}{13}$. *Ans.* $1\frac{83}{260}$.

(2) Add $\frac{11}{18}$ and $\frac{9}{16}$. *Ans.* $1\frac{25}{144}$.

(3) Add $\frac{1}{4}$, $\frac{1}{5}$, $\frac{1}{6}$, $\frac{1}{8}$, $\frac{1}{12}$. *Ans.* $1\frac{9}{120}$.

(4) Add $2\frac{2}{3}\frac{9}{8}\frac{7}{7}$ and $5\frac{5}{7}\frac{3}{3}\frac{6}{8}$. *Ans.* $1\frac{46}{15}\frac{36}{86}\frac{7}{7}$.

(5) Add $11\frac{5}{16}$, $8\frac{3}{4}$, $9\frac{13}{32}$, $10\frac{1}{2}$. *Ans.* $39\frac{31}{32}$.

(6) Add $127\frac{3}{5}$, $85\frac{3}{4}$, $109\frac{5}{12}$, $96\frac{7}{8}$. *Ans.* $419\frac{77}{120}$.

(7) Three kinds of dyes were added to a beater of paper stock, and weighed $9\frac{3}{4}$ ounces, $8\frac{2}{3}$ ounces and $13\frac{5}{8}$ ounces; how much dye stuff was used? *Ans.* $32\frac{1}{24}$ ounces.

SUBTRACTION OF FRACTIONS

104. Since subtraction is the reverse of addition, fractions must be reduced to a common denominator before the subtraction can be performed. For example, $\frac{3}{4} - \frac{5}{8} = \frac{6 - 5}{8} = \frac{1}{8}$. Here the

common denominator is found as in addition, then the difference of the numerators is taken and the remainder is written over the common denominator.

EXAMPLE.—Find the difference between $\frac{106}{133}$ and $\frac{217}{268}$.

SOLUTION.—As it is not evident which fraction is the larger, assume that the first fraction is the larger; if, later, it is found not to be such, the subtrahend and minuend in the numerator can be transposed. Then, proceeding as in addition of two fractions,

$\frac{106}{133} - \frac{217}{268} = \frac{106 \times 268 - 217 \times 133}{133 \times 268} = \frac{28408 - 28861}{58156}$. This expression shows that the fraction $\frac{217}{268}$ is the larger, and the difference is $\frac{28861 - 28408}{58156}$ $= \frac{453}{586}$. *Ans.*

105. To subtract one mixed number from another, subtract the integral and fractional parts separately. For example, subtract $26\frac{1}{3}$ from $42\frac{5}{8}$. The least common denominator is 24; hence, reduce the fractions to fractions having 24 for a denominator and subtract as shown. The difference is found to be $16\frac{7}{24}$. *Ans.*

$42\frac{5}{8} = 42\frac{15}{24}$
$26\frac{1}{3} = 26\frac{8}{24}$
$16\frac{7}{24}$ $\frac{7}{24}$

EXAMPLE.—From $109\frac{5}{12}$ take $96\frac{7}{9}$.

SOLUTION.—Here the fraction in the subtrahend is larger than the fraction in the minuend; therefore, proceed exactly as in subtraction of integers when the figure in the subtrahend denotes a larger number than the figure over it in the minuend, by adding 1 to the fraction in the minuend and 1 to the integer in the subtrahend Reducing the mixed number, $1\frac{15}{36}$ to an improper fraction, $\frac{51}{36} - \frac{28}{36} = \frac{23}{36}$, and $109 - 97 = 12$; hence, the difference is $12\frac{23}{36}$.

$109\frac{5}{12} = 109\frac{15}{36}$ $1\frac{15}{36} = \frac{51}{36}$
$96\frac{7}{9} = 96\frac{28}{36}$ $\frac{28}{36}$
$12\frac{23}{36}$. *Ans.* $\frac{23}{36}$

In a similar manner, if it is desired to subtract a fraction from an integer, reduce 1 to a fraction having the denominator of the given fraction and subtract 1 from the integer. Thus, $15 - \frac{13}{17} = 14\frac{17}{17} - \frac{13}{17} = 14\frac{4}{17}$.

106. Rule.—*Reduce the fractions to fractions having a common denominator, find the difference of the numerators, and write the remainder over the common denominator; then reduce the resulting fraction to its lowest terms.*

EXAMPLES

(1) Find the difference between $\frac{47}{54}$ and $\frac{80}{181}$. *Ans.* $\frac{1205}{9754}$.

(2) From $11\frac{5}{16}$ subtract $7\frac{2}{3}$. *Ans.* $3\frac{31}{48}$.

(3) Subtract $8\frac{3}{8}$ from 13. *Ans.* $4\frac{5}{8}$.

(4) From $472\frac{73}{114}$ take $297\frac{85}{92}$. *Ans.* $175\frac{377}{5244}$.

(5) What number added to $53\frac{1}{4}$ will make $75\frac{1}{4}$? *Ans.* $21\frac{1}{2}\frac{3}{5}$.

(6) A package of dye weighs $3\frac{11}{16}$ pounds; after $1\frac{3}{4}$ pounds have been used how much remains? *Ans.* $1\frac{15}{16}$ pounds.

MULTIPLICATION OF FRACTIONS

107. To Find the Product of a Fraction and an Integer. In Art. **53,** multiplication was shown to be a short process of addition; hence, $4 \times \frac{3}{7}$ may be regarded as $\frac{3}{7} + \frac{3}{7} + \frac{3}{7} + \frac{3}{7} = \frac{3+3+3+3}{7} = \frac{4 \times 3}{7} = \frac{12}{7} = 1\frac{5}{7}$. Here it is seen that if the numerator of the fraction be multiplied by the integer, the product is the same as the product of the integer and the fraction. This same result may be arrived at in another way, thus: $\frac{3}{7}$ths of 4 is evidently 3 times $\frac{1}{7}$th of 4; $\frac{1}{7}$th of 4 is $4 \div 7 = \frac{4}{7}$, and 3 times 4 one-sevenths is 3×4 one-sevenths, or 12 one-sevenths $= \frac{12}{7} = 1\frac{5}{7}$, as before.

Again, what is the product of 5 and $\frac{11}{15}$? Here, $5 \times \frac{11}{15} = \frac{5}{1}\frac{11}{5} = \frac{11}{3} = 3\frac{2}{3}$. This same result may be obtained by cancelation; thus, $\cancel{5} \times \frac{11}{\cancel{15}_{3}} = \frac{11}{3} = 3\frac{2}{3}$. As the result of this operation, it is seen that dividing the denominator of the fraction by the integer, multiplies the fraction. This should be evident, since the smaller the denominator the larger the fraction; and if the denominator is 5 times as small, the fraction must be 5 times as large. Therefore, the product of a fraction and an integer may be obtained by multiplying the numerator of the fraction by the integer or by dividing the denominator of the fraction by the integer. If the denominator is not a multiple of the integer, but contains one or more factors common to the integer, these factors may be canceled before multiplying the numerator. For example,

$$\cancel{126}_{\cancel{21}} \times \frac{61}{\cancel{72}_{\cancel{12}_{4}}} = \frac{7 \times 61}{4} = \frac{427}{4} = 106\frac{3}{4}.$$

108. To Multiply a Fraction by a Fraction.—When the word "of" occurs between two fractions or between a fraction and an integer, it has the same meaning as the sign of multiplication; thus, $\frac{2}{3}$ of $\frac{5}{8}$ and $\frac{2}{3}$ of 12 have the same meaning as $\frac{2}{3} \times \frac{5}{8}$ and

$\frac{2}{3} \times 12$, respectively. Now $\frac{2}{3}$ is 2 times $\frac{1}{3}$; $\frac{1}{3}$ of $\frac{1}{8}$ is $\frac{1}{24}$, since $1 \times \frac{1}{8}$ is $\frac{1}{8}$, and $\frac{1}{3}$ of $\frac{1}{8}$ must be 3 times smaller, $\frac{1}{8 \times 3} = \frac{1}{24}$. Since $\frac{5}{8}$ is 5 times $\frac{1}{8}$, $\frac{1}{3}$ of $\frac{5}{8}$ must be 5 times as large as $\frac{1}{3}$ of $\frac{1}{8}$; hence, $\frac{1}{3}$ of $\frac{5}{8} = \frac{1}{24} \times 5 = \frac{5}{24}$. Since, also, $\frac{2}{3}$ is 2 times $\frac{1}{3}$, and $\frac{1}{3}$ of $\frac{5}{8}$ is $\frac{5}{24}$, $\frac{2}{3}$ of $\frac{5}{8}$ is $\frac{5}{24} \times 2 = \frac{10}{24} = \frac{5}{12}$, or $\frac{5}{\cancel{24}} \times \overset{2}{\cancel{2}} = \frac{5}{12}$.

This same result may be obtained in an easier manner by multiplying the numerators of the fractions for the numerator of the product, and multiplying the denominators of the fractions for the denominator of the product; thus, $\frac{2}{3} \times \frac{5}{8} = \frac{2 \times 5}{3 \times 8} = \frac{10}{24} = \frac{5}{12}$, or $\frac{\overset{2}{\cancel{2}}}{3} \times \frac{5}{\underset{4}{\cancel{8}}} = \frac{5}{3 \times 4} = \frac{5}{12}$.

The product of any number of fractions may be found in this same way; that is, divide the product of the numerators by the product of the denominators. For instance, $\frac{\overset{5}{\cancel{5}}}{\underset{6}{\cancel{6}}} \times \frac{\overset{3}{\cancel{3}}}{\underset{4}{\cancel{8}}} \times \frac{7}{\underset{3}{\cancel{15}}} \times \frac{\overset{2}{\cancel{12}}}{17} = \frac{7}{8}$. Cancelation should be employed whenever possible.

109. To multiply a mixed number by an integer, multiply the integral and fractional parts separately. For example, $17\frac{7}{8} \times 42 = 17 \times 42 + \frac{7}{8} \times 42$; $\frac{7}{\underset{4}{\cancel{8}}} \times \overset{21}{\cancel{42}} = \frac{147}{4} = 36\frac{3}{4}$; $17 \times 42 = 714$; and $714 + 36\frac{3}{4} = 750\frac{3}{4}$.

110. To multiply a mixed number by a mixed number, reduce both to improper fractions, and then multiply in the ordinary manner. Thus, $13\frac{3}{7} \times 10\frac{5}{16} = \frac{\overset{47}{\cancel{94}}}{\cancel{7}} \times \frac{\overset{25}{\cancel{175}}}{\underset{8}{\cancel{16}}} = \frac{1175}{8} = 146\frac{7}{8}$.

111. Rule.—I. *The product of two or more fractions is found by dividing the product of the numerators by the product of the denominators, canceling factors that are common to the numerators and denominators whenever possible before multiplying.*

II. *To find the product of two or more mixed numbers, reduce them to improper fractions before multiplying.*

EXAMPLES

(1) $\frac{2}{3}$ of $\frac{3}{8}$ of ^{5} = ? *Ans.* $\frac{5}{28}$.

(2) $\frac{25}{56} \times \frac{28}{65}$ = ? *Ans.* $\frac{5}{26}$.

(3) $68 \times 19\frac{7}{6}$ = ? *Ans.* $1348\frac{2}{3}$.

(4) $33\frac{11}{16} \times 56\frac{1}{4}$ = ? *Ans.* $1894\frac{59}{64}$.

(5) $3\frac{3}{4} \times 6\frac{2}{3} \times \frac{7}{15}$ = ? *Ans.* $11\frac{2}{3}$.

(6) $1\frac{38}{169} \times 1\frac{95}{286}$ = ? *Ans.* $\frac{345}{1703}$.

(7) From a barrel of rosin weighing 404 pounds, $\frac{11}{16}$th of the contents were taken; how many pounds were taken? *Ans.* $277\frac{3}{4}$ pounds.

(8) A car load of coal weighing 78,500 pounds was received. At the end of a certain period, $\frac{3}{8}$ths had been used; during a second period, one-half of the remainder was used; and during a third period, $\frac{7}{8}$ths of what was left at the end of the second period was burned. How many pounds were used during the three periods? *Ans.* $75{,}433\frac{19}{32}$ pounds.

(9) Referring to the last example, how many pounds were consumed during each of the three periods? *Ans.* First period, $29437\frac{1}{2}$ pounds. Second period, $24531\frac{1}{4}$ pounds. Third period, $21464\frac{27}{32}$ pounds.

(10) What is the value of $4\frac{5}{6}$ ounces of dye that is worth $\$1\frac{3}{16}$ per ounce? *Ans.* $\$5\frac{71}{96}$.

(11) From a pile of 11,670 cords of wood, $\frac{3}{8}$ths was used in one part of a plant; another part of the plant used $\frac{1}{2}$ as much as the first part, and a third part of the plant used $\frac{7}{12}$ths as much as the second part; how many cords were used in the third part? *Ans.* $1276\frac{13}{32}$ cords.

(12) Referring to the last example, how many cords were used in the first and second parts of the plant? *Ans.* First part, $4376\frac{1}{4}$ cords. Second part, $2188\frac{1}{8}$ cords.

NOTE.—Observe that the product of two proper fractions is always less than either of the fractions used in finding the product.

DIVISION OF FRACTIONS

112. To Divide a Fraction by an Integer.—Suppose it is desired to divide $\frac{6}{7}$ by 3. Since $\frac{6}{7}$ is 6 one-sevenths, 6 one-sevenths divided by 3 is 2 one-sevenths = $\frac{2}{7}$, in the same way that 6 bushels divided by 3 is 2 bushels. Hence, dividing the numerator by the integer divides the fraction. Again, the quotient of $\frac{6}{7}$ divided by 3 is evidently only one-third as much as the quotient of $\frac{6}{7}$ divided by 1, since 3 is 3 times 1; hence, the quotient of $\frac{6}{7}$ divided by 3 will be $\frac{1}{3}$ of $\frac{6}{7} = \frac{1}{3} \times \frac{6}{7} = \frac{6}{21} = \frac{2}{7}$. Note that in the first case, the numerator is divided by the integer, while in the second case, the denominator is multiplied by the integer,

the result being the same in both cases. Therefore, dividing the numerator or multiplying the denominator by an integer divides the fraction.

113. To Divide an Integer by a Fraction.—Suppose it is desired to divide 12 by $\frac{3}{4}$; for instance, how many boxes holding $\frac{3}{4}$ pound each can be filled from a package holding 12 pounds? If 12 be divided by 1, the quotient is 12, but if 12 be divided by a number smaller than 1, the quotient will evidently be greater than 12. Since 1 is 4 times as large as $\frac{1}{4}$, 12 divided by $\frac{1}{4}$ must be 4 times as large as 12 divided by 1; hence, $12 \div \frac{1}{4} = 12 \times 4 = 48$. Since $\frac{3}{4}$ is 3 times $\frac{1}{4}$, 12 divided by $\frac{3}{4}$ will be only one-third as much as 12 divided by $\frac{1}{4}$, and the quotient will be $48 \times \frac{1}{3} = 16$, or $48 \div 3 = 16 = 12 \div \frac{3}{4}$.

This same result may be obtained in a much easier manner by turning the fraction upside down (this is called **inverting the fraction**) and multiplying; thus $\overset{4}{\cancel{12}} \times \frac{4}{\cancel{3}} = 16$. Consequently, to divide an integer by a fraction, invert the fraction and multiply the integer by the inverted fraction.

114. To Divide a Fraction by a Fraction.—Suppose it is desired to divide $\frac{3}{4}$ by $\frac{2}{3}$. Since the divisor is a fraction, invert it and multiply $\frac{3}{4}$ by the inverted fraction; thus, $\frac{3}{4} \times \frac{3}{2} = \frac{9}{8} = 1\frac{1}{8}$. That this is correct is easily shown. Since $\frac{3}{4}$ is 3 times $\frac{1}{4}$, $3 \div \frac{2}{3} = 3 \times \frac{3}{2} = \frac{9}{2}$, and one-fourth of $\frac{9}{2}$ is $\frac{9}{2} \div 4 = \frac{9}{8}$, or $\frac{9}{2} \times \frac{1}{4} = \frac{9}{8} = 1\frac{1}{8}$.

EXAMPLE.—Divide $\frac{85}{112}$ by $\frac{45}{72}$.

SOLUTION.—Inverting the divisor and multiplying, $\overset{17}{\cancel{85}} \times \overset{8}{\cancel{72}} = \frac{17}{14} = 1\frac{3}{14}$. *Ans.*

115. To divide a mixed number by an integer, divide the integral part by the integer; if there is a remainder, annex the fraction to it, reduce this new mixed number to an improper fraction, and divide it by the integer.

EXAMPLE.—Divide $508\frac{3}{7}$ by 8.

SOLUTION.—Here $508 \div 8 = 63$ and 4 remainder; annexing the $\frac{3}{7}$ to 4, it becomes $4\frac{3}{7} = \frac{31}{7}$; $\frac{31}{7} \div 8 = \frac{31}{56}$. Therefore, $508\frac{3}{7} \div 8 = 63\frac{31}{56}$. *Ans.*

The mixed number might have been reduced to an improper fraction and then divided by the integer; the process here given is better, however (particularly, when the divisor is small), and it requires less work.

116. To divide a mixed number by a mixed number, reduce both to improper fractions, and then proceed in the regular manner.

EXAMPLE.—Divide $15\frac{3}{8}$ by $3\frac{3}{20}$.

SOLUTION.—$15\frac{3}{8} = 1\frac{2}{8}\frac{3}{3}$; $3\frac{3}{20} = \frac{6}{2}\frac{3}{0}$; $\frac{\overset{41}{\cancel{123}}}{\underset{2}{\cancel{8}}} \times \frac{5}{\underset{21}{\cancel{63}}} = \frac{205}{42} = 4\frac{37}{42}$. *Ans.*

117. Rule.—I. *To divide a fraction by an integer, divide the numerator or multiply the denominator by the integer.*

II. *To divide an integer or fraction by a fraction, invert the divisor and multiply the integer or fraction by it.*

III. *To divide a mixed number by an integer, divide the integral part by the divisor; if there is a remainder, annex the fractional part to it, reduce the resulting mixed number to an improper fraction, and divide it by the divisor; if there is no remainder, divide the fractional part of the mixed number by the divisor. The sum of the two quotients is the entire quotient.*

EXAMPLE.—Divide $1296\frac{2}{3}$ by 16.

SOLUTION.—$1296 \div 16 = 81$; $\frac{2}{3} \div 16 = \frac{2}{3} \times \frac{1}{\cancel{16}} = \frac{1}{24}$; hence, $1296\frac{2}{3} \div 16 = 81\frac{1}{24}$. *Ans.* That this method of dividing a fraction by an integer is correct is easily seen. Since $16 = \frac{16}{1}$, inverting the divisor makes it $\frac{1}{16}$, and multiplying by $\frac{1}{16}$ multiplies the denominator of the fraction by 16. This method of dividing by an integer is recommended, because it permits of cancelation, when possible.

EXAMPLES

(1) Divide $\frac{204}{561}$ by 12. *Ans.* $\frac{17}{33}$.
(2) Divide $\frac{57}{64}$ by $4\frac{3}{4}$. *Ans.* $\frac{3}{16}$.
(3) Divide $\frac{363}{420}$ by $\frac{11}{35}$. *Ans.* $2\frac{3}{4}$.
(4) Divide 180 by $\frac{45}{82}$. *Ans.* 328
(5) Divide $\frac{9}{16}$ by $\frac{3}{4}$. *Ans.* $\frac{3}{4}$.
(6) Divide $19\frac{7}{8}$ by $4\frac{1}{2}$. *Ans.* $4\frac{5}{12}$.
(7) Divide $4795\frac{7}{8}$ by 21. *Ans.* $228\frac{3}{8}$.

COMPLEX AND COMPOUND FRACTIONS

118. A complex fraction is one that has a fraction for its numerator or denominator or both terms are fractions; thus, $\frac{\frac{3}{8}}{7}$, $\frac{9}{\frac{3}{5}}$,

and $\dfrac{\frac{3}{8}}{\frac{3}{5}}$ are complex fractions. In order to distinguish the numerator from the denominator, the dividing line is made heavier than the dividing line of the fraction or fractions. Thus, in the first complex fraction, the numerator is $\frac{3}{8}$ and the denominator is 7, the expression meaning also $\frac{3}{8} \div 7$; in the second complex fraction, the numerator is 9 and the denominator is $\frac{3}{5}$, the expression also denoting $9 \div \frac{3}{5}$; in the third complex fraction, the numerator is $\frac{3}{8}$ and the denominator is $\frac{3}{5}$, the expression also denoting $\frac{3}{8} \div \frac{3}{5}$.

119. To simplify a complex fraction, multiply the digits or numbers above and below the heavy line by the denominator of the fraction; the product will be the denominator of the simplified fraction in the first and third cases above, and the numerator in the second case. Or, transpose the denominator of the fraction from *above* to *below* the line or from *below* to *above* the line, as the case may be, and use it as a multiplier. For example, to simplify the first of the above complex fractions, write $\dfrac{\frac{3}{8}}{7} = \dfrac{3}{7 \times 8} = \frac{3}{56}$; in the second case, $\dfrac{9}{\frac{3}{5}} = \dfrac{9 \times 5}{3} = 15$; in the third case, $\dfrac{\frac{3}{8}}{\frac{3}{5}} = \dfrac{3 \times 5}{3 \times 8} = \frac{5}{8}$. That these results are correct may be proved by performing the operations indicated. Thus, $\frac{3}{8} \div 7 = \dfrac{3}{7 \times 8} = \frac{3}{56}$; $9 \div \frac{3}{5} = \dfrac{9 \times 5}{3} = 15$; and $\frac{3}{8} \div \frac{3}{5} = \frac{3}{8} \times \frac{5}{3} = \dfrac{3 \times 5}{3 \times 8} = \frac{5}{8}$.

Either term or both terms of a complex fraction may consist of two or more fractions connected by one or more of the four signs of operation, $+$, $-$, $\times$, $\div$; thus, $\dfrac{\frac{11}{16} - \frac{3}{7}}{4}$ is a complex fraction, and it is equal to $\dfrac{\frac{29}{112}}{4} = \dfrac{29}{448}$.

120. A **compound fraction** is a fraction of a fraction. Thus, $\frac{3}{5}$ of $\frac{8}{11}$, or $\frac{3}{5} \times \frac{8}{11}$, is a compound fraction. Since division of a fraction by a fraction is changed into multiplication by inverting the divisor, $\frac{3}{5} \div \frac{8}{11}$ may also be called a compound fraction; and a compound fraction may be defined as an expression containing two or more fractions connected by signs of multiplication or division. Even the product of one or more integers and one or more fractions may be called a compound fraction; thus, $145 \times \frac{2}{3}\frac{7}{2}$, $\frac{1}{2}$ of $\frac{4}{7}$ of $147 = \frac{1}{2} \times \frac{4}{7} \times 147$, $3\frac{1}{4} \times 288 \times \frac{9}{16}$, etc. may be called compound fractions.

121. If either or both of the terms of a complex fraction is a compound fraction, the best way to simplify it is to use the method of Art. **119.** For example, simplify $\dfrac{160 \times \frac{38}{12} \times \frac{7854}{10000} \times 900 \times 225}{33000}$.

Transposing the two denominators $\dfrac{\overset{4}{\cancel{160}} \times 38 \times \overset{714}{\cancel{7854}} \times \overset{3}{\cancel{900}} \times \overset{9}{\cancel{225}}}{\underset{3}{\cancel{12}} \times \underset{100}{\cancel{10000}} \times \underset{11}{\cancel{33000}}}$.

$$= \frac{38 \times 714 \times 9}{100} = 2441\tfrac{2}{2}\tfrac{2}{5}. \quad Ans.$$

First cancel the ciphers that are common to the numerator and denominator; this is the same as dividing by 10, 100, etc. The cancelation might have been carried farther, since 38 and 714 are both multiples of 2, and 100 is a multiple of 4; but it is easier to divide by 100 than by 25, and the work was left as it stands.

As another example, find the value of $\dfrac{29\frac{5}{6}}{.5\frac{3}{8} \times 3\frac{1}{7}}$. Reducing the mixed numbers to improper fractions,

$$\frac{\frac{1}{6}\frac{7}{9}}{\frac{4}{8}\frac{3}{1} \times \frac{2}{7}\frac{2}{1}} = \frac{179 \times \overset{4}{\cancel{8}} \times 7}{43 \times 3} = 5\tfrac{0}{1}\tfrac{1}{2}\tfrac{2}{9} = 38\tfrac{1}{1}\tfrac{1}{2}\tfrac{0}{9}. \quad Ans.$$

INVOLUTION

122. The product of several equal factors is called a **power** of the number used as a factor. Powers are named *first, second, third, fourth, fifth,* etc. according to the number of equal factors considered or used. Thus, the second power of 7 is $7 \times 7 = 49$, the third power of 9 is $9 \times 9 \times 9 = 729$, the fifth power of 6 is $6 \times 6 \times 6 \times 6 \times 6 = 7776$.

123. Instead of indicating the product of the factors as above, it is customary to shorten the work by writing a small figure above and to the right of the number used as a factor, the small figure indicating the number of times the factor is to be used and corresponds with the name of the power. Thus, 6^5 is read 6 *fifth* or 6 to the *fifth power*, and means the fifth power of 6, or $6 \times 6 \times 6 \times 6 \times 6 = 7776$; 5^4 is read 5 *fourth* or 5 to the *fourth power*, and represents $5 \times 5 \times 5 \times 5 = 625$, etc.

The second and third powers are usually called the square and cube, respectively; thus, 21^2 is read 21 *square* and equals $21 \times 21 = 441$, 16^3 is read 16 *cube* and equals $16 \times 16 \times 16 = 4096$. The first power of any number is the number itself; thus $217^1 = 217$, $48^1 = 48$, etc.

The small figure that is written above and to the right of the number is called an **exponent.** The power itself is the product found by performing the multiplication; thus, the cube of 16 is 4096, the square of 21 is 441, the fifth power of 6 is 7776, the first power of 528 is 528, etc.

Involution treats of powers of numbers.

124. To indicate the power of a fraction, enclose the fraction in parenthesis and write the exponent outside the parenthesis; thus, the cube of $\frac{3}{4}$ is indicated by $(\frac{3}{4})^3$, and it equals $\frac{3}{4} \times \frac{3}{4} \times \frac{3}{4} = \frac{3 \times 3 \times 3}{4 \times 4 \times 4} = \frac{27}{64}$. Hence, to raise a fraction to any indicated power, raise the numerator and denominator separately to the power indicated. For example, $(\frac{9}{16})^4 = \frac{9 \times 9 \times 9 \times 9}{16 \times 16 \times 16 \times 16} = \frac{7461}{65536}$ in other words. $(\frac{9}{16})^4 = \frac{9^4}{16^4}$, because $\frac{9}{16} \times \frac{9}{16} \times \frac{9}{16} \times \frac{9}{16} = \frac{9 \times 9 \times 9 \times 9}{16 \times 16 \times 16 \times 16} = \frac{9^4}{16^4}$.

125. To raise 10 to any power indicated by the exponent, simply annex to 1 as many ciphers as there are units indicated by the exponent; thus, $10^5 = 100{,}000$, $10^3 = 1000$, $10^7 = 10{,}000{,}000$, etc. In the first case, the exponent 5 indicates 5 units and 5 ciphers follow 1; in the second case, 3 ciphers follow 1 because the exponent is 3; in the third case, 7 ciphers follow 1 because the exponent is 7, etc. These results may all be proved by actual multiplication.

Conversely, to express any power of 10 as 10 with an exponent, count the number of ciphers, and the number so found will be the exponent. Thus, $100 = 10^2$; $10000 = 10^4$; $1000000 = 10^6$; etc.

To raise a mixed number to the power indicated by the exponent, first reduce the mixed number to an improper fraction, and then raise the fraction to the indicated power. Thus, $(4\frac{8}{11})^2 = (\frac{52}{11})^2 = \frac{2704}{121} = 22\frac{42}{121}$. *Ans.*

EXAMPLES

(2) 746^2 = ? *Ans.* 556,516.

(2) 87^3 = ? *Ans.* 658,503.

(3) $(\frac{21}{32})^3$ = ? *Ans.* $\frac{9261}{32768}$.

(4) 100,000,000 is what power of 10? *Ans.* The 8th.

(5) 10^4 = ? *Ans.* 10000.

(6) $(29\frac{5}{8})^2$ = ? *Ans.* $877\frac{41}{64}$.

---

126. To Multiply or Divide by a Power of 10.—Consider what occurs when some integer, as 7035, is multiplied by some power of 10, say 10,000. According to Art. **58,** the product is found by multiplying by 1 and then annexing 4 ciphers, the number of ciphers to the right of 1; thus, 7035 × 10000 = 70350000. This operation is equivalent to the following: to multiply any number (integer) by a power of 10, simply annex to the number as many ciphers as there are ciphers in the given power of 10 or as many ciphers as are indicated by the exponent of 10. For instance, 10,000 = 10^4; hence, to multiply any number by 10,000 or 10^4, annex 4 ciphers to the integer.

Now any integer, as 7035, may be written 7035., the decimal point being always understood to follow the unit figure (5, in this case) whether written or not; but when it is written, any number of ciphers may be annexed to the number without altering its value. Thus, 7035.0, 7035.0000, and 7035 all have the same value, since the position of the unit figure has not been changed and the addition of the ciphers has not added anything to the number. If, now, 7035.0000 be multiplied by 10,000, the product will be the same as before, or 70350000., the decimal point being moved 4 *places to the right.* In the product, 5 no longer indicates 5 units, but 5 ten-thousands. From this, it is evident that any number may be multiplied by a power of 10 by moving (shifting) the decimal point as many places to the right as there are ciphers in the power or indicated by the exponent of 10. Thus, $3.1416 \times 10^2 = 3.1416 \times 100 = 314.16$; $3.1416 \times 10^4 = 3.1416 \times$

$10000 = 31416$; $3.1416 \times 10^7 = 3.1416 \times 10000000 = 31416000$; etc.

Rule.—*To multiply any number by a power of* 10, *shift the decimal point as many places to the right as there are ciphers in the power or indicated by the exponent of* 10, *annexing ciphers, if necessary.*

127. Since $3.1416 \times 1000 = 3141.6$, $3141.6 \div 1000$ must evidently equal 3.1416; in other words, to divide by a power of 10, shift the decimal point as many places to the *left* as there are ciphers in the power or indicated by the exponent of 10. This evidently follows also from the fact that division is the reverse of multiplication; hence, if the decimal point is shifted to the *right* for multiplication, it must be shifted to the *left* for division.

To divide 3.1416 by 10,000, it is necessary to *prefix* ciphers to the first figure, 3, in order to make it occupy a position 4 places to the right of unit's place, and $3.1416 \div 10^4 = 3.1416 \div 10000 = .00031416$. In multiplication, the unit figure is removed to the *left*; in division, it is removed to the *right*. Also, $7035 \div 10^7 = 7035 \div 10000000 = .0007035$.

Rule.—*To divide any number by a power of* 10, *shift the decimal point as many places to the left as there are ciphers in the power or indicated by the exponent, prefixing ciphers, if necessary.*

It will be noted that the 3 in 3.1416 indicates 3 units, while in .00031416, it indicates 3 ten-thousandths, a number ten thousand times smaller than 3 units. This is evidently correct, since the divisor is 10,000.

DECIMALS AND DECIMAL FRACTIONS

DEFINITIONS AND EXPLANATIONS

128. A **decimal fraction** is one that has a power of 10 for its denominator; $\frac{7}{10}$, $\frac{5236}{10000}$, $3\frac{1416}{10000}$, etc. are decimal fractions. When the numerator is divided by the denominator, the above fractions become .7, .5236, 3.1416, and are called **decimals.**

129. Any decimal may be converted into a decimal fraction by writing the decimal (considered as an integer) for the numerator of the fraction and writing for the denominator a power of 10 containing as many ciphers as there are decimal places in the

decimal. For example, .7854 = $\frac{7854}{10000}$, .00034 = $\frac{34}{100000}$, .052465 = $\frac{52465}{1000000}$, etc.

130. The value of a decimal is not changed by annexing ciphers; thus, .25000 = .25. This is evident, since nothing has been added to the number represented by the decimal, and the position of the first digit relative to the decimal point has not been changed. This may also be shown by converting both decimals into decimal fractions; thus, .25000 = $\frac{25000}{100000}$ = $\frac{25}{100}$, and .25 = $\frac{25}{100}$. Here it is seen that as many ciphers are added to the denominator as are added to the numerator, and these may be canceled in the fraction.

131. If the numerator of a decimal fraction contains the factor 2 or 5, the decimal fraction may be reduced to lower terms, thus becoming an ordinary common fraction. For example, .625 = $\frac{625}{1000}$ = $\frac{125}{200}$ = $\frac{25}{40}$ = $\frac{5}{8}$; .032 = $\frac{32}{1000}$ = $\frac{4}{125}$; .2704 = $\frac{2704}{10000}$ = $\frac{169}{625}$; etc.

If the decimal does not contain 2 or 5 as a factor, that is, if it does not end in 5 or is not an even number, the decimal fraction cannot be reduced, because since $2 \times 5 = 10$ and they are both primes, 2 and 5 are the only factors in any power of 10. Thus, $1000 = 10^3 = 10 \times 10 \times 10 = 2 \times 5 \times 2 \times 5 \times 2 \times 5 = 2 \times 2 \times 2 \times 5 \times 5 \times 5 = 2^3 \times 5^3$.

132. Addition and Subtraction of Decimals.—It has already been shown how to add decimals and numbers containing decimals; simply place the decimal points under one another, and add or subtract as in the case of integers, placing the decimal point in the result directly under the decimal point in the numbers added or subtracted. The only case that need be considered here is that in which the subtrahend contains more decimal places than the minuend. In such a case, annex ciphers to the minuend until it contains as many decimal places as the subtrahend, and then subtract.

EXAMPLE 1.—From 426.45 take 294.0847.

SOLUTION.—Here the minuend contains two decimal places and the subtrahend contains four; therefore, annexing two ciphers, which does not change the value of the minuend, the subtraction is performed as in the case of integers. This operation is equivalent to reducing the decimal fractions to a common denominator, which in this case is 10,000. In practice, the ciphers would not be written; they would simply be considered to be added.

426.4500
294.0847
132.3653 *Ans.*

EXAMPLE 2.—From 93 take 77.5652.

SOLUTION.—The work is arranged as shown in the margin with the decimal points under each other, and the ciphers that are supposed to be annexed are not written, but are understood.

```
93.
77.5652
15.4348 Ans.
```

MULTIPLICATION OF DECIMALS

133. The only difference between multiplying decimals and multiplying integers is the locating of the decimal point in the product. The number of decimal places in the product is equal to the sum obtained by adding to the number of decimal places in the multiplicand the number of decimal places in the multiplier. To understand the reason for this, multiply two decimal fractions. Thus, $.24 \times .637 = \frac{24}{100} \times \frac{637}{1000} = \frac{15288}{100000} = .15288$. Here it will be noted that the number of ciphers in the denominator of the product is equal to the sum of the number of ciphers in the denominators of the two fractions. But the number of ciphers in the denominators is the same as the number of decimal places in the factors; therefore, multiply the numbers in the same manner as though they were integers, disregarding the decimal points. The product is found to be 15288. There are 3 decimal places in the multiplicand and 2 in the multiplier; hence, there are $3 + 2 = 5$ decimal places in the product.

```
  .637
  .24
 2548
1274
.15288 Ans.
```

Had the numbers been .037 and .24, the product as integers would have been 888; pointing off 5 decimal places, the product as decimals is .00888.

134. Mixed numbers are multiplied in exactly the same way as integers, and the number of decimal places in the product is determined in the same manner as in multiplication of decimals.

EXAMPLE 1.—What is the product of 75.305 and 3.1416?

SOLUTION.—The product of the numbers is found as though they were integers. Since there are 3 decimal places in the multiplicand and 4 in the multiplier, 7 decimal places are pointed off in the product, which is, therefore, 236.578188.

```
    7 5 . 3 0 5
    3 . 1 4 1 6
  ---------------
    4 5 1 8 3 0
    7 5 3 0 5
  3 0 1 2 2 0
    7 5 3 0 5
2 2 5 9 1 5
-----------------
2 3 6.5 7 8 1 8 8 0 Ans.
```

EXAMPLE 2.—Find the product of 47,082 and .0005073.

```
      4 7 0 8 2
  . 0 0 0 5 0 7 3
  ---------------
      1 4 1 2 4 6
    3 2 9 5 7 4
  2 3 5 4 1 0 0
  ---------------
  2 3.8 8 4 6 9 6 8 Ans.
```

SOLUTION.—The numbers are multiplied as in example 1, as though they were integers. The multiplicand contains no decimal places and the multiplier contains 7; hence, 7 decimal places are pointed off in the product.

EXAMPLES

(1) $47.95 \times 126.42 = ?$ *Ans.* 6061.839.

(2) $.0903 \times .7854 = ?$ *Ans.* .07092162.

(3) $730.25 \times 36.524 = ?$ *Ans.* 26671.651.

(4) $1285 \times .0001016 = ?$ *Ans.* .130556.

(5) $.00575 \times .00036 = ?$ *Ans.* .00000207.

(6) What will be the cost of 7042 tons of coal at $7.33 per ton? *Ans.* $51,617.86.

(7) If the price of a certain dye is $1.13 per ounce, how much must be paid for 18.625 ounces? *Ans.* $210.4625, or $210.46.

NOTE.—In all monetary transactions, if the fractional part of a cent is equal to or greater than ½ the number of cents is increased by 1; otherwise, the fraction is rejected. In the last example, the fraction of a cent is .25 (found by moving the decimal point so as to follow the cent), and it is therefore rejected.

(8) What amount must be paid for 5050 pounds of paper at 12.375 cents per pound? *Ans.* 62,554 cents, or $625.54.

(9) How much freight will have to be paid on 439 tons of limestone at $4.17 per ton? *Ans.* $1830.63.

(10) If a pulp mill uses an average of 9.07 tons of soda ash per month and the cost is $45 per ton, how much will be paid for this material in a year? *Ans.* $4897.80.

DIVISION OF DECIMALS

135. Decimals are divided in exactly the same manner as integers, no attention being paid to the decimal point until all the figures of the dividend have been used. To understand how the decimal point is located in the quotient, consider carefully the following examples and their solutions, paying strict attention to the explanations.

EXAMPLE 1.—Divide 7.092162 by .0903.

```
7.092162(.0903
6 321.    78.54
 7711     Ans.
 7224
  4876
  4515
   3612
   3612
```

SOLUTION.—The division is performed as shown in the margin, the quotient being 7854 when the dividend and divisor are considered as integers. To locate the decimal point, subtract the number of decimal places in the divisor from the number of decimal places in the dividend, and the remainder will be the number of decimal places in the quotient. In the present case, the divisor contains 4 decimal places and the dividend 6; hence, there are $6 - 4 = 2$ decimal places in the quotient.

To understand the reason for above proceeding, convert the decimals into decimal fractions and divide by the rule for division of fractions. Thus, $\frac{7092162}{1000000} \div \frac{903}{10000} = \frac{7092162}{1000000} \times \frac{10000}{903}$ $= \frac{7854}{100} = 78.54$. Here 4 ciphers in the numerator of the divisor cancel 4 ciphers in the denominator of the dividend, leaving $6 - 4 = 2$ ciphers in the denominator of the quotient. Since the number of ciphers in the denominators of the fractions is the same as the number of decimal places in the corresponding numbers expressed as decimals, the number of decimal places in the quotient is always equal to the number of decimal places in the dividend minus the number in the divisor.

EXAMPLE 2.—Divide 7.092162 by 903.

SOLUTION.—Considering the dividend as an integer, the quotient is 7854, as found in the last example. Since there are no decimal places in the divisor and there are 6 in the dividend, there are $6 - 0 = 6$ decimal places in the quotient, which is therefore equal to .007854. That this is correct may be proved by multiplying the quotient by the divisor.

EXAMPLE 3.—Divide 70921.62 by .0903.

SOLUTION.—Considering both numbers as integers, the quotient is 7854. Since the divisor contains a greater number of decimal places than the dividend, annex ciphers to the dividend (this does not change its value, see Art. **130**) until it contains the same number as the divisor; in this case, 2 ciphers, then since both dividend and divisor contain the same number of decimal places, in this case 4, the quotient is an integer, because $4 - 4 = 0$, and there are no decimal places to be pointed off. Therefore, $70921.62 \div .0903 = 70921.6200 \div .0903 = 785400$, treating the dividend and divisor as integers.

The same result may also be arrived at as follows: Expressing the decimals as decimal fractions and dividing as in example 1, $\frac{7092162}{100} \times \frac{10000}{903} = \frac{7092162}{903} \times 100 = 7854 \times 100 = 785400$. Or, since multiplying both numerator and denominator by the same number does not alter the value of the fraction, $\frac{7092162}{100} \times \frac{100}{100} = \frac{709216200}{10000}$, a fraction whose denominator is the same as the denominator of the divisor, and which equals the decimal 70921.6200, which, in turn, is the dividend with 2 ciphers annexed. But, $\frac{709216200}{10000} \times \frac{10000}{903} = 785400$, the same result as before.

EXAMPLE 4.—Divide 4575.12 by 7.854.

```
4575.120(7.854
3927 0      582 62/119   Ans.
 648 12   Or, 582.521 1/119   Ans.
 628 32
  19 800
  15 708
   4 0920   4092/7854 = 62/119
   3 9270
     16500
     15708
       7920
       7854
         66   66/7854 = 1/119
```

SOLUTION.—Since the divisor contains one more decimal place than the dividend, annex a cipher to the dividend. The quotient is found to be 582, and there is a remainder of 4092; hence, the quotient is $582\frac{4092}{7854} = 582\frac{62}{119}$, a mixed number composed of an integer and a common fraction. It is generally more convenient to express the quotient in such cases as a mixed number composed of an integer and a decimal; in this case, simply annex one or more ciphers to the remainder and proceed with the division as indicated. In other words, $\frac{62}{119} = .521\frac{1}{119}$. That this is the case is readily shown. Thus, 62 = 62.000, and 62.000 ÷ 119 = $.521\frac{1}{119}$. Note that three ciphers in all were annexed to the remainders, since there were three different remainders used as dividends, and one cipher was annexed to each.

EXAMPLE 5.—Find to seven decimal places the quotient of $\frac{7}{25}\frac{48}{75}$.

```
348.0000000(25575
255 75      .0136070   Ans.
 92 250
 76 725
 15 5250
 15 3450
    180000
    179025
      9750
```

SOLUTION.—Since there are no decimal places in either dividend or divisor, annex as many ciphers to the dividend following the decimal point as there are decimal places required in the quotient, in this case 7. When all the figures in the dividend have been used, there will be 7 decimal places in the quotient, because 7 − 0 = 7. The quotient to 7 decimal places is .0136070.

136. Whenever the divisor contains a factor other than 2 or 5, there will always be a remainder, no matter to how many decimal places the quotient is carried, and as this is usually the case, it is customary to carry the division one place farther than the number of decimal places specified. If, then the extra figure is 5 or a greater digit, the preceding figure is increased by 1, and a minus sign is written after the quotient to show that it is not quite so large as written or printed; but, if the extra figure is less than 5, it is rejected, and a plus sign is written after the quotient to show that it is a little larger than written or printed. In this example, it is seen that the figure in the 8th decimal place is 3; hence, the quotient to 7 decimal places would be written .0136070 +. The quotient to 3 decimal places would be written .014 −. In practice, these signs may be omitted.

EXAMPLE.—Find the quotient of .0348 ÷ .00255 to five decimal places.

```
.03480 (.00255
 255    13.647058
  930   13.64706−  Ans.
  765
  1650
  1530
   1200
   1020
    1800
    1785
     1500
     1275
      2250
      2040
```

SOLUTION.—The divisor contains one more decimal place than the dividend; hence, annexing one cipher to the dividend, the integral part of the quotient is found to be 13. Ciphers are now annexed to the different remainders as described in example 4, and 5 + 1 = 6 figures of the decimal are found. Since the sixth figure of the decimal is 8, the preceding figure, 5, is increased by 1, and the quotient to five decimal places is 13.64706−.

137. Rule—I. *If the divisor does not contain more decimal places than the dividend, divide as though the numbers were integers; subtract the number of decimal places in the divisor from the number in the dividend, and point off in the quotient as many decimal places as are indicated by the remainder.*

II. *If the divisor contains a greater number of decimal places than the dividend, annex ciphers to the dividend until it contains the same number of decimal places as the divisor; if the dividend (with the annexed ciphers) is then larger than the divisor, both being considered as integers, the quotient when all the figures of the dividend (including the annexed ciphers) have been used will be an integer. But, if the dividend is smaller than the divisor, annex ciphers to the dividend and proceed with the division; the quotient will be a decimal, and may be pointed off as in* **I.**

III. *If there be a remainder, it may be written over the divisor, and the resulting fraction reduced to lower terms, if possible. Or, ciphers may be annexed to the remainders as found and the division continued until the quotient has been determined to any desired number of decimal places.*

EXAMPLES

(1) Divide 268.92 by .007007. *Ans.* 38378.76+

(2) Divide 304.75 by 3.125. *Ans.* 97.52.

(3) Divide 100.43 by 1000.26. *Ans.* .100404−.

(4) Divide 648.433 by 6509.85. *Ans.* .099608−.

(5) Divide .00218 by 966. *Ans.* .000002257−.

(6) The price of a certain dye is $19.25 per pound; if the bill for a purchase of dye amounts to $1398.88, how many pounds were bought?

Ans. 72.67 − pounds.

(7) The amount paid for 3490 tons of coal was $25,642.12; what was the price per ton? *Ans.* $7.35.

(8) Bought press felts at $2.16 per pound. The bill came to $546.48; what was the weight of the felt? *Ans.* 253 pounds.

DECIMALS AND COMMON FRACTIONS

138. To reduce a common fraction to a decimal, divide the numerator by the denominator. If the denominator is a power of 2, as 2, 4, 8, 16, 32, 64, etc., an exact decimal equivalent can be found for the common fraction; this will also occur when the denominator is a power of 5, as 5, 25, 125, 625, 3125, etc. But, if the denominator contains any other factor than 2 or 5, the quotient will never be exact, no matter to how many decimal places the division may be carried. In such cases, find the quotient to one more decimal place than is desired; if the extra figure is 5 or a greater digit, increase the preceding figure by 1 and annex the sign −; otherwise, reject it and annex the sign +.

EXAMPLES.—Reduce (*a*) $\frac{11}{16}$, (*b*) $\frac{17}{24}$, and (*c*) $\frac{5}{657}$ to decimal fractions:

SOLUTION.—The work is shown herewith. In (*a*), the first figure of

(*a*)		(*b*)		(*c*)	
11.0 (16		17.0 (24		5.000 (657	
9 6	.6875 *Ans.*	16.8	.70833 + *Ans.*	4 599	.0076103 + *Ans.*
1 40		200		4010	
1 28		192		3942	
120		80		680	
112		72		657	
80		80		2300	
80		72		1971	
		8		329	

the quotient evidently denotes .6, since it was necessary to annex one cipher to the dividend, 11, before dividing; and since the divisor (denominator) is a power of 2 ($2^4 = 16$), the quotient is exact, the remaining figures being found by annexing ciphers to the different remainders.

In (*b*), the first figure of the quotient denotes .7; the remaining figures are found as in (*a*). Note that the second remainder, and all succeeding remainders, is 8, and that the third figure of the quotient, and all succeeding figures, is 3.

In (*c*), it is necessary to annex 3 ciphers to the dividend (numerator) before it will contain the divisor (denominator); hence, the first figure

of the quotient denotes .007. The division is here carried to 7 decimal places. The next figure will be 5, and the correct value of the quotient to 7 decimal places is .0076104 −.

139. Mixed Fractions.—It sometimes happens that it is desirable to express a quotient exactly, even though it has been reduced to an approximate decimal. For instance, in (*b*) of the last example, the quotient might have been written $.708\frac{8}{24} = .708\frac{1}{3}$, and the quotient in (*c*) might have been written $.00761\frac{23}{657}$. Expressions of this kind are called **mixed fractions.**

A mixed fraction may be reduced to a common fraction in the same way that a mixed number is reduced to an improper fraction; that is, multiply the decimal by the denominator of the fraction, add the numerator to the product, and write the sum over the denominator. Thus, $.708\frac{1}{3} = \frac{.708 \times 3 + .001}{3} = \frac{2.124 + .001}{3} = \frac{2.125}{3}$. The numerator, 1, of the fraction belongs to the same order as the figure of the decimal that precedes it; in other words, $.708\frac{1}{3} = \frac{708}{1000} + \frac{1}{3000} = .708 + \frac{.001}{3}$. To get rid of the decimal in the numerator of the reduced fraction, note that $.125 = \frac{1}{8}$; hence, multiply both terms by 8, and $\frac{2.125 \times 8}{3 \times 8} = \frac{17}{24}$. Again, $.00761\frac{23}{657} = \frac{.00761 \times 657 + .00023}{657}$

$$= \frac{4.99977 + .00023}{657} = \frac{5}{657}.$$

In practice, the work would be performed as shown in the margin. Here the decimal is multiplied by the denominator, and the numerator is added to the product before pointing off, both the product and the numerator being treated as integers.

```
  .00761
     657
  -----
    5327
   3805
 4 566
 -------
 4 99977
      23
 -------
 5.00000
```

140. To Reduce a Decimal to a Fraction Having a Given Denominator.—To reduce a decimal to a fraction having a specified denominator, all that is necessary is to multiply the decimal by the specified denominator; the product will be the numerator of the fraction. Thus, to reduce .671875 to a fraction having 64 for its denominator, $.671875 \times 64 = 43$; hence, the fraction is $\frac{43}{64}$.

The reason for this is simple. No number is changed by multiplying it by 1; $1 = \frac{64}{64}$; and $.671875 \times \frac{64}{64} = \frac{.671875 \times 64}{64}$ $= \frac{43}{64}$. Or, reducing the decimal to a decimal fraction, $.671875 = \frac{671875}{1000000}$; now multiplying both terms of this fraction by 64, the specified denominator, $\frac{671875 \times 64}{1000000 \times 64} = \frac{43000000}{64000000} = \frac{43}{64}$.

In the case just given, the product of the decimal and the specified denominator is an integer, 43. This seldom occurs in practice, and what is usually sought is that fraction having the specified denominator that is nearest in value to the decimal. For instance, what fraction having a denominator of 32 is nearest in value to .708? Since $.708 \times 32 = 22.656$, $= 23-$, $.708 = \frac{23}{32}$, approximately. Had the decimal been .703, $.703 \times 32 = 22.496 = 22+$, and $.703 = \frac{22}{32} = \frac{11}{16}$, approximately. Here, as before, if the first figure of the decimal part of the product is 5 or a greater digit, increase the preceding figure by 1; otherwise, reject the decimal. Had it been required to express .703 as a fraction having a denominator of 64, $.703 \times 64 = 44.992$ $= 45-$, and $.703 = \frac{45}{64}$, approximately.

EXAMPLES

(1) Reduce $\frac{807}{2500}$ to a decimal. *Ans.* .80859375.

(2) Reduce .8035$\frac{11}{34}$ to a common fraction. *Ans.* $\frac{2733211}{3400000}$.

(3) Reduce $\frac{25}{4251}$ to a decimal. *Ans.* .0061597−.

(4) Reduce $\frac{569}{1525}$ to a mixed decimal. *Ans.* .0569836$\frac{4}{61}$.

(5) Express .8086 inch to the nearest 64th of an inch.
Ans. $\frac{52}{64} = \frac{13}{16}$ inch.

(6) Express as decimals $\frac{3}{8}$, $\frac{5}{8}$, $\frac{7}{8}$. *Ans.* .375, .625, .875.

(7) Express .3937 to the nearest 12th. *Ans.* $\frac{5}{12}$.

(8) Express .3937 inch to the nearest 32d inch. *Ans.* $\frac{13}{32}$ inch.

(9) Reduce .05698$\frac{22}{61}$ pound to a common fraction. *Ans.* $\frac{86905}{152500}$ pound.

SIGNS OF AGGREGATION

141. When it is desired to indicate that several numbers are to be operated upon as though they were a single number, a sign of **aggregation** is used to enclose the numbers. The word *aggregate* means to collect, to bring several things together. There are four of these signs: the vinculum $\overline{\quad}$, a straight line placed over the numbers, and the parenthesis ( ), brackets [ ], and brace { },

used to enclose the numbers. An expression like $3 \times (45 - 28)$ or $3 \times \overline{45 - 28}$ means that 28 is to be subtracted from 45 and the remainder is to be multiplied by 3. In arithmetic, only the vinculum and the parenthesis are generally used.

142. Order of Signs of Operation.—When several numbers are connected by signs of operation denoting addition and subtraction, perform the operations indicated in regular order from left to right; thus, $25 - 19 + 47 - 32 - 9 + 50 = 6 + 47 - 32 - 9 + 50 = 53 - 32 - 9 + 50 = 21 - 9 + 50 = 12 + 50 = 62$. If, however, a sign of multiplication or division occurs, the operation indicated by this sign must be performed before adding or subtracting; thus, $25 - 3 \times 5 + 42 \div 7 + 38 = 25 - 15 + 6 + 38 = 10 + 6 + 38 = 16 + 38 = 54$.

If signs of multiplication and division follow one another with no signs of addition or subtraction between them, perform the operations of multiplication and division in order from left to right before adding or subtracting; thus, $46 + 54 \div 6 \times 8 - 67 = 46 + 9 \times 8 - 67 = 46 + 72 - 67 = 118 - 67 = 51$.

Now by using signs of aggregation, the order of operations indicated by the signs of operation may be changed; thus, if desired, the last expression may be written $(46 + \overline{54 \div 6}) \times 8 - 67$. Here 54 is first divided by 6, the quotient is added to 46, the sum is multiplied by 8, and 67 is then subtracted, the result being $(46 + 9) \times 8 - 67 = 55 \times 8 - 67 = 440 - 67 = 373$. When one sign of aggregation includes another, as in this case, always consider the *inner* sign first.

EXAMPLES

(1) $159 - (8 + 5 \times 16) \div 11 - 100 = ?$ *Ans.* 51.

(2) $6 \times 13 - 119 \div 7 - 50 \div 12 = ?$ *Ans.* $56\frac{5}{6}$.

(3) $20 + (126 - 4 \times \overline{270 \div 9}) \times 15 - 35 = ?$ *Ans.* 75.

(4) $96 - 7.3 \times 11 \div 14 + 24 \times 8 = ?$ *Ans.* $282.2\frac{9}{14}$.

RATIO AND PROPORTION

RATIO

143. It is frequently desirable to ascertain the relative sizes of two numbers. For instance, suppose it is desired to know the relative sizes of 28 and 7, that is, how many times 7 is 28? Divid-

ing 28 by 7, $28 \div 7 = 4$; hence, 28 is 4 times 7, or, in other words, 28 is 4 times as large as 7. What has here been done is to *compare* 28 and 7, the comparison being done by division. If it were desired to compare 7 to 28, that is, to find what part of 28 is 7, divide 7 by 28, obtaining $7 \div 28 = \frac{1}{4}$; in other words, 7 is $\frac{1}{4}$th of 28 or 7 is $\frac{1}{4}$th as large as 28.

When two numbers are compared in this manner, by dividing the first by the second, the comparison is called a **ratio.** The language used in the first of the above cases is *the ratio of* 28 *to* 7, and in the second case, *the ratio of* 7 *to* 28; in either case, the ratio of one number to another is the first number divided by the second.

144. A ratio may be indicated as above by using the sign of division, but it is usual to use the colon (see Art. **64**), thus indicating distinctly that a ratio is implied; thus, the ratio of 57 to 36 is written 57 : 36. A ratio is also very frequently indicated in the form of a fraction; thus, the ratio of 128 to 16 is written 128 : 16 or $\frac{128}{16}$. The second, or fractional, form possesses many advantages. The ratio of 16 to 128 is written 16 : 128 or $\frac{16}{128}$.

The two numbers used in forming or expressing a ratio are called the **terms** of the ratio. The number to the left of the colon or above the dividing line is called the first term, and the other number is called the second term. In the ratio 32 : 12, or $\frac{32}{12}$, 32 is the first term and 12 is the second term.

The **value** of a ratio is the quotient obtained by dividing the first term by the second term; thus, the values of the ratios 57 : 36, 16 : 128, $\frac{32}{12}$, etc. are $1\frac{7}{12}$, $\frac{1}{8}$, $2\frac{2}{3}$, etc. respectively.

145. Ratios like the above in which the first term is named first in speaking or writing are called **direct ratios.** It is frequently convenient to name the second term first, in which case the ratio is called an **inverse ratio;** thus, the direct ratio of 24 to 4 is 24 : 4, and its value is 6; but the inverse ratio of 24 to 4 is 4 : 24, and its value is $\frac{1}{6}$. The word *direct* is seldom or never used in connection with ratio; but if the ratio is an inverse one, the word *inverse* or *inversely* is always used. If there is nothing to show that the ratio is inverse, it is always taken to be direct.

The best way of writing an inverse ratio is to write it first as if it were direct, and then invert, *i.e.*, transpose, the terms. For example, to write the inverse ratio of 36 to 90, write first 36 : 90 or $\frac{36}{90}$; now invert the terms and obtain 90 : 36 or $\frac{90}{36}$. The value of the inverse ratio of 36 to 90 is $2\frac{1}{2} = 2.5$.

146. Evidently, only like numbers can be used to make up the terms of a ratio. For instance, 5 dollars cannot be compared with 8 feet; but 5 dollars can be compared with 8 dollars, and 5 feet can be compared with 8 feet. The speed of one shaft can be compared with the speed of another shaft.

147. If both terms of a ratio be multiplied or both be divided by the same number, it will not alter the value of the ratio. Thus, the value of the ratio 32 : 12 is $2\frac{2}{3}$; multiplying both terms by 3, the ratio becomes 96 : 36, and its value is $2\frac{2}{3}$, as before; dividing both terms by 4, the ratio becomes 8 : 3, and its value is $2\frac{2}{3}$, as before. The reason for this is seen when the ratio is written in the fractional form, $\frac{32}{12}$. Now regarding this expression as a fraction, it has been shown in connection with fractions that multiplying or dividing the numerator and denominator by the same number does not alter the value of the fraction.

PROPORTION

148. If there are two ratios, each having the same value, and they are written so as to indicate that the ratios are equal, the resulting expression is called a **proportion.** Thus, the value of the ratio $\frac{5 \text{ hours}}{8 \text{ hours}}$ is $\frac{5}{8}$, and the value of the ratio $\frac{\$1.10}{\$1.76}$ is $\frac{5}{8}$; placing these two ratios equal to each other, $\frac{5 \text{ hours}}{8 \text{ hours}} = \frac{\$1.10}{\$1.76}$, an expression that is called a proportion.

It is to be noted that the value of any ratio is always an abstract number (Art. **6**); it is for this reason that the ratio of two concrete numbers can be placed equal to the ratio of two entirely different concrete numbers, as in the above case. Hence, when stating a proportion, it is not customary to write the name of the quantities, and the above proportion would ordinarily be written either as $\frac{5}{8} = \frac{1.10}{1.76}$ or as 5 : 8 = 1.10 : 1.76. Here 5 is called the **first**

term, 8 is called the **second term,** 1.10 is called the **third term,** and 1.76 is called the **fourth term.** When written in the second form above, the two *outside terms,* 5 and 1.76, are called the **extremes,** and the two *inside terms,* 8 and 1.10, are called the **means.**

149. Law of Proportion.—*In any proportion, the product of the extremes is equal to the product of the means;* thus, in the proportion just given, $5 \times 1.76 = 8.8$, and $8 \times 1.10 = 8.8$.

To understand the reason for this law, the value of the two ratios in the above proportion is .625, and the proportion may be reduced to the expression .625 = .625. Dividing both numbers by .625, the expression reduces to 1 = 1. Now writing the proportion in the form $\frac{5}{8} = \frac{1.10}{1.76}$, divide both ratios by $\frac{5}{8}$, and the result is $\frac{5}{8} \times \frac{8}{5} = \frac{1.10}{1.76} \times \frac{8}{5}$, or $1 = \frac{8.8}{8.8} = 1$. But, 8×1.10 is the product of the means and 5×1.76 is the product of the extremes, and both are equal to 8.8.

There is still another way of writing a proportion that was formerly used by the older writers on mathematical subjects; they employed the double colon in place of the sign of equality when writing the proportion in the second form; they would express the proportion $\frac{15}{12} = \frac{405}{324}$ as $15 : 12 :: 405 : 324$. Here, as before, the product of the extremes equals the product of the means, since $15 \times 324 = 12 \times 405 = 4860$. This last way of writing a proportion is not much used at this time, the sign of equality being preferred.

150. A proportion may be read in two ways. Consider the proportion $16 : 10 = 88 : 55$; this may be read 16 is to 10 as 88 is to 55, or it may be read the ratio of 16 to 10 equals the ratio of 88 to 55. Either way is correct, but the second is to be preferred when using the fractional form for expressing the ratios.

151. A proportion, like a ratio, may be *direct* or *inverse;* in a **direct proportion,** both ratios are direct, but in an **inverse proportion,** *one* of the ratios is inverse. If both ratios were inverse, the proportion would become direct again. For example, the statement that the ratio of 16 to10 equals the inverse ratio of 55 to 88 indicates an inverse proportion. To write it, first state it as though it were a direct proportion and then invert one of the

ratios; thus, $16 : 10 = 55 : 88$. Now inverting the first ratio, $10 : 16 = 55 : 88$, whence, $10 \times 88 = 16 \times 55$; or, inverting the second ratio, $16 : 10 = 88 : 55$, whence, $16 \times 55 = 10 \times 88$. The proportion as first written was not true, since $16 \times 88 = 1408$ and $10 \times 50 = 550$; but by inverting one of the ratios, it became true. The test of any proportion is the law of Art. **149.** *If the product of the extremes does not equal the product of the means, then the expression is not a proportion.*

152. To Find the Value of One Unknown Term in a Proportion. The object of any proportion is to find the value of one of the terms when the values of the other three are known; this fact will be made clearer shortly.

Let x represent the value of the term that is not known, and suppose the proportion is $14 : 8 = 49 : x$. By the law of proportion, $14 \times x = 8 \times 49$. Now, evidently, if 14 times $x = 8 \times 49$, 1 times x must equal $\frac{8 \times 49}{14} = 28$, and the proportion $14 : 8 = 49 : 28$ is true, because $14 \times 28 = 8 \times 49 = 392$. Suppose the first term had been unknown; then $x : 8 = 49 : 28$, and 1 times $x = x = \frac{8 \times 49}{28} = 14$. Here it is seen that if the unknown is one of the extremes, its value can be found by dividing the product of the means by the other extreme.

Suppose the second term had been unknown; then the proportion would have been $14 : x = 49 : 28$, from which $14 \times 28 = 49 \times x$, and the value of x is evidently $\frac{14 \times 28}{49} = x$, or $x = 8$. Lastly, suppose that the third term had been unknown; then $14 : 8 = x : 28$, and the value of x is evidently $\frac{14 \times 28}{8} = x$, or $x = 49$. Here it is seen that if the unknown is one of the means, its value can be found by dividing the product of the extremes by the known mean.

153. Proportion is used for solving a great variety of problems. For example, the statement that "the circumferences of any two circles are to each other as their diameters" or that "the circumference of a circle varies directly as its diameter" implies a proportion. In the first statement, if the diameter and circumference of any one circle are known and the diameter (or circumference) of some other circle is given, the circumference (or diameter) of that circle may be found by the method explained in Art. **152.**

Thus, the circumference of a circle whose diameter is 5 inches is 15.708 inches, very nearly; hence, to find the circumference of a circle whose diameter is 17.6 inches, first form the proportion $5 : 17.6 = 15.708 : x$, and $x = \frac{17.6 \times 15.708}{5} = 55.29216$ inches.

Note particularly the way in which the above proportion was formed. The first ratio consists of the two diameters, which are *like* quantities, and the second ratio consists of the two circumferences, which are also *like* quantities. The first and third terms in every direct proportion must belong or relate to the same thing, and the second and fourth terms must also belong or relate to the same thing; in the present case, 5 and 15.708 are the diameter and circumference of one circle, and 17.6 and 55.29216 are the diameter and circumference of the other circle. It will also be noted that the second circle is larger than the first circle; hence, its circumference must also be larger. But, if x be written for the third term of the proportion, the value that will be found for x will be smaller than the third term, thus showing again that x must be written as the fourth term. If desired, the proportion might have been written $15.708 : x = 5 : 17.6$, and the same value will be obtained for x. It is customary, however, to have the first ratio consist of numbers or quantities that are known.

Now referring to the second statement above, that the circumference of a circle varies directly as its diameter, this means that if the diameter *increases*, the circumference also *increases*, and if the diameter *decreases*, the circumference also *decreases*, both increasing or decreasing in the *same* ratio. Therefore, if the circumference of a circle whose diameter is 5 inches is 15.708 inches, and it is desired to find the circumference of the circle when the diameter is increased to 17.6 inches, form the proportion $5 : 17.6 = 15.708 : x$. Substituting the value of x in this proportion, $5 : 17.6 = 15.708 : 55.29216$. The diameter of the second circle has increased in the ratio $17.6 : 5$, whose value is 3.52, and the circumference of the second circle has increased in the ratio $55.29216 : 15.708$, whose value is 3.52; hence, the diameter and the circumference increased in the same ratio. From the foregoing, it is seen that the word *vary*, as here used, always implies a proportion or that a proportion can be formed.

In practice, instances frequently occur in which an increase in one of the terms of the first ratio results in a *decrease* in the value of the corresponding term in the second ratio, and vice versa.

Thus, suppose a certain volume of air be confined in a cylinder, and that it is made to keep this volume by means of a piston that is free to move up and down and on which is placed a weight. Now it is evident that if the weight be *increased*, the piston will move downward and the volume of the air will be *less;* or, if the weight be decreased, the piston will move upward and the volume of the air will be *greater*. In other words, the volume decreases as the pressure increases, and vice versa. This fact is expressed more elegantly by saying that *the volume varies inversely as the pressure*, which, of course, implies an inverse proportion, when a proportion is possible. As an example, it is known that when the temperature remains the same, the volume of a gas (air, for instance) varies inversely as the pressure; if the volume is 12.6 cubic feet when the pressure is 14.7 pounds per square inch, what is the volume when the pressure is 45 pounds per square inch? Forming the proportion as though it were direct, $14.7 : 45 = 12.6 : x$. Here it is seen that the value of x obtained from the proportion will be greater than 12.6, and it should be less, thus indicating an inverse proportion. Since the proportion is inverse, invert the terms of one of the ratios, say the second, obtaining $14.7 : 45 = x : 12.6$, from which $x = \frac{14.7 \times 12.6}{45} = 4.116$ cubic feet. Note that the volume is smaller than the original volume, as it ought to be.

Example 1.—If 5 men can do a certain piece of work in 22 hours, how long will it take 9 men to do the same work, if they all work at the same rate?

Solution.—It is evident that 9 men can do the work in *less* time than 5 men; hence, the proportion is inverse. Stating as a direct proportion, $5 : 9 = 22 : x$; then, inverting the second ratio, $5 : 9 = x : 22$, from which $x = \frac{5 \times 22}{9} = 12\frac{2}{9}$ hours. *Ans.*

Example 2.—If 5 men earn $48.95 in 22 hours, how much will 9 men earn in the same time at the same rate of pay?

Solution.—It is here plain that 9 men will receive a greater wage than 5 men; hence, the proportion is direct, and $5 : 9 = 48.95 : x$, from which $x = \frac{48.95 \times 9}{5} = \$88.11$. *Ans.* Note that the time, 22 hours, has nothing to do with the proportion, because it is the same in both cases.

154. Compound Proportion.—A simple proportion is one in which all the terms consist of but one number in each term; but when two of the terms or all four of the terms contain more than one number, then the proportion is said to be *compounded*, or it is called a **compound proportion.** Suppose the last example had

been stated thus: if 5 men earn \$48.95 in 22 hours, how much will 9 men earn in 15 hours? Here 5 men in 22 hours earn \$48.95, and it is required to find how much 9 men will earn in 15 hours, all being paid at the same rate. The proportion in this case should be stated as follows: $5 \times 22 : 9 \times 15 = 48.95 : x$, from which $x = \dfrac{9 \times 15 \times 48.95}{5 \times 22} = \$60.07\frac{1}{2}$. The reason for stating the proportion in this manner is that 5 men working 22 hours is the same as one man working $5 \times 22 = 110$ hours, and during this 110 hours, \$48.95 was earned. Also, 9 men working 15 hours is the same as one man working $9 \times 15 = 135$ hours, and during this 135 hours, a certain amount was earned that is represented by x. Instead of multiplying before substituting in the proportion, it is better to indicate the multiplication, so as to take advantage of any opportunity of cancelation; thus,

$$x = \frac{\overset{3}{9} \times \overset{4.45}{15} \times \overset{}{48.95}}{\underset{2}{5} \times \underset{}{22}} = 60.075.$$

Example.—If 25 men can dig a ditch 600 feet long, 4½ feet wide, and 3½ deep in a certain number of days, working 8 hours a day, how long a ditch 4 feet wide and 4 feet deep can 36 men dig when working 10 hours a day?

Solution.—If men and hours be considered in forming the first ratio, the first term is compounded of 25 men and 8 hours, representing time; the third term is compounded of 600 feet, 4.5 feet, and 3.5 feet, representing work done; the second term is compounded of 36 men and 10 hours; and the fourth term is compounded of x feet, 4 feet, and 4 feet. Then, $25 \times 8 : 36 \times 10 = 600 \times 4.5 \times 3.5 : x \times 4 \times 4$, from which

$$x = \frac{36 \times 10 \times 600 \times 4.5 \times 3.5}{25 \times 8 \times 4 \times 4} = 1063\frac{1}{8} \text{ feet.} \quad \textit{Ans.}$$

EXAMPLES

Find the value of x in the following proportions:

(1) $6 : 8 = x : 18$. *Ans.* 13.5.

(2) $20 : x = 8 : 26$. *Ans.* 65.

(3) $x : 7 = 81 : 91$. *Ans.* $6\frac{3}{13}$.

(4) $11 : 16 = 517 : x$. *Ans.* 752.

(5) $5.5 \times 18 : 7.2 \times 15 = 4.4 \times 25 : 10.5 \times \frac{20}{13} \times x$. *Ans.* $7\frac{3}{7}$.

(6) $120 \times 64 : 540 \times 328 = 110 : x$. *Ans.* $2536\frac{7}{8}$.

(7) If a certain supply of provisions will last 525 men 129 days, how long will it last 603 men? *Ans.* 112 + days.

(8) Referring to Art. **153,** suppose the volume of an air compressor is 1.95 cubic feet. If the cylinder be filled with air at a pressure of 14.7 pounds per square inch, and the air is compressed until the volume is .31 cubic feet, what is the pressure, the temperature remaining the same?

Ans. 92.47 — pounds per square inch.

(9) Referring to Art. **153.** what is the circumference of a circle whose diameter is $12\frac{3}{8}$ inches? *Ans.* 38.8773 inches.

ARITHMETIC

(PART 2)

EXAMINATION QUESTIONS

(1) What is the greatest common divisor of 15,862 and 1309?
Ans. 77.

(2) Find the G.C.D. of 45, 135, 270 and 405. *Ans.* 45.

(3) Find the L.C.M. of 45, 135, 270 and 405. *Ans.* 810.

(4) Which fraction is the larger, $\frac{60}{421}$ or $\frac{75}{526}$? *Ans.* $\frac{60}{421}$.

(5) What is the value of $\frac{3}{8} + 1\frac{7}{12} + \frac{11}{16} + \frac{11}{18} - \frac{19}{24}$?
Ans. $1\frac{67}{144}$.

(6) Reduce the following fractions to their lowest terms: (*a*) $\frac{378}{604}$; (*b*) $\frac{896}{1296}$; (*c*) $\frac{117}{446}$; (*d*) what is the difference between the fractions (*a*) and (*b*)? (*e*) what is the sum of the fractions (*b*) and (*c*)?
Ans. (*a*) $\frac{3}{4}$; (*b*) $\frac{56}{81}$; (*c*) $\frac{9}{32}$; (*d*) $\frac{19}{324}$; (*e*) $\frac{325}{648}$.

(7) What is the value of $\frac{11}{12} - \frac{11}{14} + \frac{11}{16} - \frac{11}{18} + \frac{11}{20}$?
Ans. $\frac{381}{504}$.

(8) What is the product of the sum and the difference of $4\frac{7}{8}$ and $3\frac{1}{5}$? *Ans.* $13\frac{841}{1600}$.

(9) A carload of coal weighing 47,960 pounds was delivered to a paper mill; $\frac{3}{11}$ths was used the first week, $\frac{3}{10}$ths the second week, and $\frac{3}{12}$ths the third week; how many pounds then remained?
Ans. 8502 pound.

(10) What must be paid for $8\frac{13}{16}$ ounces of dye if the cost is \$1.27 per ounce? *Ans.* \$11.19.

(11) Divide (*a*) 0.67 by 0.0007042; (*b*) $18\frac{3}{8}$ by 653.109.
Ans. (*a*) 951.43+. (*b*) .028135−.

(12) The distance across the diagonally opposite corners of a hexagonal (six-sided) nut is called the outside diameter, and for an unfinished nut is found as follows: to $1\frac{1}{2}$ times the diameter of the bolt add $\frac{1}{8}$ inch, and multiply the sum by 1.1547. What is the outside diameter of a nut for a $1\frac{1}{8}$ inch bolt? Give result to nearest 64th of an inch. *Ans.* $2\frac{6}{64} = 2\frac{3}{32}$ inches.

(13) Simplify the complex fraction, $\dfrac{147 \times \frac{91}{49} \times \frac{216}{12} \times \frac{58}{135}}{6084 \times \frac{29}{117} \times \frac{52}{225}}$.

Ans. $6\frac{3}{5}\frac{3}{2}$.

(14) The area of a circle is .7854 timet the square of the diameter; what is the area of a circle whose diameter is $5\frac{3}{16}$?

Ans. 21.135+.

(15) What is the value of $6\{9 - [14 - 4(12 - 7)(11 + 5) \div 48] + 7(45 - \overline{51 - 13})\}$? *Ans.* 304.

(16) Find the value of x in the proportions: (*a*) $15 : 21 = 48 : x$; (*b*) $18 : 8 = x : 54$; (*c*) $12 : x = 128 : 96$.

Ans. (*a*) $x = 67.2$. (*b*) $x = 121.5$. (*c*) $x = 72$.

(17) If 5 men can do a certain piece of work in 8 days, how long will it take 10 men to do 3 times as much work?

Ans. 12 days.

(18) If the pressure of steam in an engine cylinder varies inversely as the volume, and the pressure is 110 pounds per square inch when the volume is 0.546 cubic feet, what is the pressure when the volume is 2.017 cubic feet?

Ans. 29.78− pounds per square inch.

ARITHMETIC

(PART 3)

SQUARE ROOT

155. The *power* of a number has been previously defined; it is the continued product of as many equal factors as are indicated by the exponent; a very important problem is: given the power, to find what equal factor was used to produce the power. The number so found is called the **root** of the given number. The roots are named in the same manner as the powers. For example, if two equal numbers are used to form the power, one of them is called the **square root** of the given number; if three equal factors are used to form the power, one of them is called the **cube root;** if four equal factors are used to form the power, one of them is called the **fourth root;** etc. Thus, the square root of 9 is 3, because $3 \times 3 = 9$; the cube root of 125 is 5, because $5 \times 5 \times 5 = 125$; etc.

156. The root of a number is indicated by writing before it what is called the radical sign $\sqrt{\ }$, and to specify what root, a small figure is written in the opening of the sign; thus, $\sqrt[2]{\ }$, $\sqrt[3]{\ }$, $\sqrt[5]{\ }$, etc. indicate the square root, cube root, and fifth root, respectively. The square root is indicated so frequently that it is customary to omit the small figure, which is called the **index** of the root, using only the sign; hence, $\sqrt{9}$, $\sqrt{81}$, $\sqrt{144}$, etc. indicate respectively the square root of 9, the square root of 81, the square root of 144, etc. The index cannot be omitted when indicating any other root than the square root. It is also customary to use the vinculum in connection with the radical sign. Thus, $\sqrt[3]{1728}$, indicates the cube root of 1728; $\sqrt[5]{7776}$ indicates the fifth root of 7776; $\sqrt{24 \times 54}$ indicates the square root of the product of 24 and 54. If it were desired to indicate the product of 54 and the square root of 24, it may be done in two ways, either as $54\sqrt{24}$ or as $\sqrt{24} \times 54$. It will be observed that in the first form, the sign of multiplication is omitted between 54 and the radical sign; this is customary, and when so written, multiplication is always understood.

The root of a number is also frequently indicated by using a fractional exponent, the denominator of the fraction indicating the root. For example, $196^{\frac{1}{2}}$ has the same meaning as $\sqrt{196}$, $243^{\frac{1}{5}} = \sqrt[5]{243}$, $343^{\frac{1}{3}} = \sqrt[3]{343}$, etc. If the numerator of the fractional exponent is some number other than 1, it indicates that the number is to be raised to the power indicated by the numerator and the root taken that is indicated by the denominator. Thus, $243^{\frac{4}{5}}$ indicates that 243 is to be raised to the fourth power and the fifth root is then to be found, or it means that the fifth root of 243 is to be found and the result raised to the fourth power; the final result will be the same. For instance, $\sqrt[5]{243} = 3$, and $3^4 = 81$; also, $343^4 = 3{,}486{,}784{,}401$ and $\sqrt[5]{3{,}486{,}784{,}401} = 81$, because $81^5 = 3{,}486{,}784{,}401$. In other words, $243^{\frac{4}{5}} = (\sqrt[5]{243})^4$ or $\sqrt[5]{243^4}$, and the value of both these expressions is 81. Both expressions may also be written $(243^{\frac{1}{5}})^4$ or $(243^4)^{\frac{1}{5}}$.

157. A number is said to be a *perfect square*, a *perfect cube*, a *perfect fifth power*, etc., when its square root, cube root, fifth root, etc., can be expressed exactly; for instance, 196 is a perfect square, because $\sqrt{196} = 14$; 343 is a perfect cube, because $\sqrt[3]{343} = 7$; 3,486,784,401 is a perfect fifth power, because $\sqrt[5]{3{,}486{,}784{,}401} = 81$. Only comparatively few numbers are perfect powers; thus, between 1 and 100, the only perfect powers are 1, 4, 8, 9, 16, 25, 27, 32, 36, 49, 64, 81, and 100, a total of 13 only. Numbers that are not perfect powers are called **imperfect powers;** thus 7, 12, 26, 47, etc. are imperfect powers. It is to be noted that a number may be perfect for some particular power, but not for others; in fact, this is usually the case. For example, 243 is a perfect fifth power, but it is not perfect for any other power; $16 = 2^4$ and 4^2, and is a perfect fourth power and a perfect square; $64 = 2^6 = 4^3 = 8^2$, and is a perfect sixth power, a perfect cube, and a perfect square. Numbers that are perfect for more than one power are rare.

The root of an imperfect power is never exact; the root of such a number may be calculated to any number of figures, in the same way that the quotient may be carried to any number of decimal places in division when the divisor contains some factor other than 2 or 5.

158. The square root of a number is very frequently desired; occasionally, some other root is required, but the process of finding any root other than the square is so laborious, and such roots

are required so seldom, that only the method for finding the square root of any number is described here. When other roots are desired, they are usually found by using tables of logarithms. A method for finding cube and fifth roots is described in *Elementary Applied Mathematics*.

159. There are many methods of finding the square root of a number, the best general method being that known as Horner's method, which is the one that will be explained here.

The first step, no matter what method is used, is to point off the number whose root is to be found into periods of two figures each, beginning at the decimal point and going to the left, and to the right also, in the case of mixed numbers and pure decimals. For this purpose, it is best to use a tick—a mark something like an apostrophe. For example, the number 11,778,624 is pointed off as 11′77′86′24; the numbers .7854 and .0003491 would be pointed off as .78′54 and .00′03′49′10; the number 755.29216 would be pointed off as 7′55.29′21′60. When the right hand period of the decimal is not *complete*, that is, does not contain two figures, add a cipher. The left-hand period of the integral part may contain either one or two figures, according to whether the number of figures in the integral part is even or odd.

Suppose the square root of 11,778,624 is required. First point off the number into periods of two figures each. The work is done in two columns, as follows:

3	11′77′86′24(3432
3	9
60	277
4	256
64	2186
4	2049
680	13724
3	13724
683	
3	
6860	
2	
6862	

The first period, 11, of the given number is not a perfect square, and the largest perfect square less than 11 is 9, the square root of which is 3. Write 3 as the first figure of the root, in the same manner as when finding the quotient in division, and also write it at the head of the first column. Now multiply the 3 in the first column by the 3 in the root, and write the product under the first period; subtract, obtaining a remainder of 2. Add the first figure of the root to the number in the first column, and the sum is 6, to which annex a cipher, making it 60; also annex the second period of the given number to the remainder, 2, in the second

column, obtaining as a result 277. Divide the last number in the second column, 277, by the last number in the first column, 60, and the quotient is 4, which is probably the next figure of the root. Write 4 for the second figure of the root, add it to 60, the last number in the first column, obtaining 64; multiply 64 by 4, the second figure of the root, and subtract the product, 256, from the last number in the second column, 277, obtaining 21 for the remainder. Then add the second figure of the root, 4, to 64, the last number in the first column, and the sum is 68, to which annex a cipher, making it 680. Also annex the third period, 86, to the remainder 21, in the second column, making it 2186. Divide 2186 by 680, and the quotient, 3, is probably the next, or third, figure of the root. Write 3 for the third figure of the root, add it to 680 in the first column, obtaining 683, and multiply 683 by the third figure of the root; the product, 2049, is subtracted from 2186, and the remainder is 137. Add the third figure of the root, 3, to 683, obtaining 686, to which annex a cipher, making it 6860. Annex the fourth (and last) period of the given power to the last remainder, making it 13724; divide this by 6860, and the quotient 2, is the fourth figure of the root. Add the fourth figure of the root to 6860, obtaining 6862; multiplying this by the fourth figure of the root, the product is 13724, which subtracted from the last number in the second column gives a remainder of 0. Therefore, $\sqrt{11,778.624} = 3432$. *Ans.*

Note that the first column is formed entirely by adding, and that two additions are made for each figure of the root. The above explanation of the method will be made much clearer to the reader if he will take pencil and paper and set down the various numbers exactly as they occur in the explanation. After a few examples have been solved, the method will be clear, and it will be found easy to remember; in fact, the work will be found to be but little harder than ordinary division.

160. Referring to the last example, the numbers in the first column (the ones to which the ciphers have been annexed) that are used as divisors to determine figures of the root are called **trial divisors;** the numbers that they divide are called **trial dividends,** and the numbers that are obtained by multiplying the trial divisors by the root figures may be called, for the want of a better term, the **partial squares** or **partial powers.** When the given number is a perfect square, the sum of the partial powers, added as they stand, must equal the given power; thus,

the sum of 9, 256, 2049, and 13724, the partial powers, added as they stand, is 11,778,624, the given number.

9
256
2049
13724
11778624

In this example, the first trial divisor is 60, and the first trial dividend is 277; the second trial divisor is 680, and the second trial dividend is 2186; etc. The numbers obtained by adding the root figures to the trial divisors are called the **complete divisors;** 64, 683, and 6862 are the complete divisors.

When finding the second figure of the root, it may happen that the product of the complete divisor and the second figure of the root is greater than the partial power; in such case, try a number one unit smaller for the second figure of the root. If the product of the new complete divisor and the new second figure of the root is still greater than the trial divisor, reduce the second figure of the root one unit more. It will never be necessary to make more than two trials, and seldom more than one.

EXAMPLE.—Find the square root of 12,054,784.

3	12′05′47′84 (3472. *Ans.*	SOLUTION.—The work is almost exactly the same as in the preceding example. It is to be noted, however, that the quotient obtained by dividing the first trial dividend by the first trial divisor is 5; but when 5 is added to 60 for the complete divisor, and this is multiplied by 5, the product is greater than the trial dividend; hence, 4 is tried for the second figure of the root.
3	9	
60	305	
4	256	
64	4947	
4	4809	
680	13884	
7	13884	
687		
7		
6942		

161. If the given number whose root is to be found contains a decimal there will be as many integral places in the root as there are *periods* in the integral part of the given number. Thus, the square root of 1205.4784 contains two integral places; the square root of 43206.231 contains three integral places, because when pointed off, it becomes 4′32′06.23′10, and there are three periods in the integral part; etc.

If the given number is a pure decimal, the root will also be a pure decimal; and if there are ciphers between the decimal point and the first digit, there will be as many ciphers between the decimal point and the first digit of the root as there are *periods* containing *no* digits. Thus, the square root of .000081 is .009, because when pointed off, the given number becomes .00′00′81,

and there are two periods containing no digits; the square root of .000196 is .014, because when pointed off, the given number becomes .00'01'96, and there is one period containing no digit; etc. To prove this statement, square the roots; thus, $.009^2 = .000081$, and $.014^2 = .000196$.

EXAMPLE 1.—What is the square root of 844.4836?

SOLUTION.—On dividing the first trial dividend, 444, by the first trial divisor, 40, the quotient is 11; but, the second figure of the root cannot be greater than 9; hence, try 9 for the second figure. The second trial divisor is 580, and it is larger than the second trial dividend, which is 348; consequently, annex another cipher to the trial divisor, making it 5800, and annex another period to the trial dividend, making it 34836, which contains the trial divisor 6 times. As there are two periods in the integral part of the given number, there are two figures in the integral part of the root.

2	8'44.48'36 (29.06. *Ans.*
2	4
40	444
9	441
49	34836
9	34836
5800	
6	
5806	

EXAMPLE 2.—Find the square root of 356 to three decimal places.

SOLUTION.—The first figure of the root is 1, since the first period is less than 4. When dividing the first trial dividend by the first trial divisor, the quotient is $256 \div 20 = 12+$; but the second figure of the root cannot exceed 9. Trying 9, the complete divisor is 29, and $29 \times 9 = 261$, which is greater than the partial power, 256; hence, try 8 for the second figure of the root. The remainder is 256, showing that the given number is an imperfect power. The work is now continued by annexing cipher periods as shown. The sixth figure of the root, the figure in the fourth decimal place, is 9; hence, the root correct to three decimal places is 18.868−. Adding the partial powers, first writing them under the last, 264089, the sum is 355.963689, which is the square of 18.867; if the last remainder, 36311, disregarding the decimal point, be added to this sum, the total is 356, the given number, showing that the work is correct.

1	3'56. (18.8679
1	1
20	256
8	224
28	3200
8	2944
360	25600
8	22596
368	300400
8	264089
3760	3631100
6	264089
3766	22596
6	2944
37720	224
7	1
37727	35596 3689
7	36311
377340	356000000

162. If the given number is a common fraction, the root may be found by extracting the square root of the numerator and denominator separately; thus, $\sqrt{\frac{9}{16}} = \frac{3}{4}$. But, unless both numerator and denominator are perfect squares, it is better to reduce the fraction to a decimal, and find as many figures of the

root as are desired; usually, 4 or 5 figures of the root of an imperfect power (not counting ciphers between the decimal point and the first digit of pure decimals) are sufficient for practical purposes.

EXAMPLE.—Find the square root of $\frac{7}{8}$ correct to four decimal places.

9	.87′50 (.93541 *Ans.*
9	81
180	650
3	549
183	10100
3	9325
1860	77500
5	74816
1865	268400
5	.81
18700	549
4	9325
18704	74816
4	.87497316
187080	2684
	.87500000

SOLUTION.—Reducing $\frac{7}{8}$ to a decimal, it becomes .875. According to Art. **161,** the root is a pure decimal and the first figure of it is a digit. After finding the first two figures of the root, there are no more periods to the given number, and the work is continued by annexing cipher periods to the different trial divisors, each period containing two ciphers. It is evident that the fifth figure of the root is 1; hence, the root correct to 4 decimal places is .9354. To prove that no mistake has been made in the work, add the partial powers, obtaining $.87497316 = .9354^2$; adding the last remainder the sum is .875; the given number, which shows that no mistake has been made. Furthermore, when expressed to four figures, .87497316 = .8750, which is also correct. It is well to check the work in this manner, as it prevents mistakes.

163. If the reader has followed each step of the foregoing examples with pencil and paper, he should be able to extract the square root of any number.

Rule I.—*Beginning at the decimal point, point off the given number into periods of two figures each, including the decimal part, if any.*

II. *Arrange the work in two columns, the second column containing the given number. The first figure of the root is the square root of largest square that does not exceed the first period.*

III. *Write the first figure of the root as the first number in the first column, multiply it by the first root figure, and subtract the product from the first period, and annex to the remainder the second period; this is the first trial dividend. Add the first root figure to the number in the first column, and annex a cipher, thus obtaining the first trial divisor.*

IV. *Divide the trial dividend by the trial divisor, and the first figure of the quotient (if less than* 10*) will probably be the second figure of the root; add this figure to the trial divisor, obtaining the*

complete divisor, which multiply by the second root figure, and subtract the product from the trial dividend, to which annex the next period to form the next trial dividend. But if this product is greater than the trial dividend, try a figure one unit less than the quotient just obtained, adding it to the trial divisor, and multiplying as before. If the product is yet greater than the trial divisor, try a root figure one unit less than the last. Having found a satisfactory complete divisor, add to it the root figure last found, and annex a cipher to form a new trial divisor. Divide the second trial dividend by the second trial divisor, and the integral part of the quotient will be the next figure of the root.

V. *Proceed in this manner until all the periods of the given number have been used. If the number is an imperfect square, limit the root to five figures (counting the first digit as one), unless more figures are especially desired, annexing cipher periods of two figures each, if necessary.*

VI. *If at any time, the trial divisor is larger than the trial dividend, annex a cipher to the trial divisor and annex another period to the trial dividend, placing a cipher in the root. Proceed in this manner until the root has been found or as many figures have been found as are desired.*

VII. *If the quotient obtained by dividing the first trial dividend by the first trial divisor is greater than 9, try 9 for the second figure of the root. The sum of the partial powers added as they stand, must a ways be equal to the square of the root as found, if no mistake has been made in the work, and this sum plus the last remainder must equal the given number. It is a good plan to check the work in every instance by ascertaining if this is the case.*

EXAMPLES

(1) Find the square root of 293,005.69. *Ans.* 541.3.

(2) Find $\sqrt{10}$ to four decimal places. *Ans.* 3.1623−.

(3) Find $\sqrt{3.1416}$ to four decimal places. *Ans.* 1.7725−.

(4) Find $\sqrt{36\frac{43}{64}}$ to four decimal places. *Ans.* 6.0557+.

(5) Find $\sqrt{.02475}$ to five decimal places. *Ans.* .15732+.

(6) Find $\sqrt{\frac{2}{3}}$ to five decimal places. *Ans.* .81650−.

(7) Find $\sqrt{.0000000217}$ to five decimal places. *Ans.* .00014731−.

APPLICATIONS OF SQUARE ROOT

164. In problems relating to mensuration, mechanics, strength of materials, and engineering generally, it is required very frequently to find the square root of numbers. A few applications will be given here by means of examples.

EXAMPLE 1.—If the area of a circle is known or given, the diameter of the circle can be found by multiplying the square root of the area by 1.1284. What is the diameter of a circle having an area of 56.28 square inches? Give result to four decimal places.

SOLUTION.—Since the result is required to four decimal places, and there are four decimal places in the number 1.1284 and one integral place, making five figures in all, find the square root of 56.28 to 5 + 1 = 6 figures, obtaining 7.50200−. Then, the diameter is $1.1284 \times 7.502 = 8.4652568$, or 8.4653− inches to four decimal places. *Ans.*

EXAMPLE 2.—When a heavy body falls freely, it strikes the ground with a velocity in feet per second equal to 8.02 times the square root of the height of the fall in feet. If a certain body, say a cannon ball, falls from a height of 750 feet, what will be its velocity when it strikes the ground?

SOLUTION.—The square root of 750 is 27.386+, and $8.02 \times 27.386 = 219.64-$ feet per second, or about 2.5 miles per minute. *Ans.*

EXAMPLE 3.—The intensity of light varies inversely as the square of the distance of the light from the object illuminated. If the intensity of illumination of a certain object 5 feet from the source of light is 32 candlepower, at what distance will the intensity of illumination be 18 candlepower?

SOLUTION.—Expressed as a direct proportion, $32 : 18 = 5^2 : x^2$. It is necessary to square the distances 5 and x, because the intensity varies inversely as the *square* of the distance. Inverting the terms in the second ratio, $32 : 18 = x^2 : 5^2$, from which $x^2 = \frac{32 \times 25}{18} = 44.4444+$. Now if $x^2 = 44.4444$, x must equal the square root of 44.4444, that is $x = \sqrt{44.4444} = 6.6667-$ feet. *Ans.* This result might also have been obtained as follows: $\frac{32 \times 25}{18} = \frac{400}{9}$ and $\sqrt{\frac{400}{9}} = \frac{20}{3} = 6\frac{2}{3} = 6.6667-$ feet. The above result means this: if an object is illuminated with an intensity of 32 candlepower when 5 feet from the light, it will be illuminated with an intensity of only 18 candlepower when $6\frac{2}{3}$ feet from the light.

EXAMPLE 4.—The strength of a simple beam (one that is merely supported at its ends) varies directly as its breadth, directly as the square of its depth, and inversely as its length. If a simple beam made of hemlock is 20 feet long, has a breadth of 3 inches, a depth of 8 inches, and will safely carry a load of 960 pounds, uniformly distributed over the beam, what must be the depth of a similar beam having a length of 16 feet and a breadth of 2 inches to carry safely a uniform load of 1250 pounds?

SOLUTION.—This is evidently a problem in compound proportion. Stated as a direct proportion, $3 \times 8^2 \times 20 : 2 \times x^2 \times 16 = 960 : 1250$. It is necessary to square 8 and x, because the strength varies as the *square* of the depth

But the strength varies *inversely* as the length; hence, transposing 20 and 16, the lengths, $3 \times 8^2 \times 16 : 2 \times x^2 \times 20 = 960 : 1250$, from which $x^2 = \dfrac{3 \times 64 \times 16 \times 1250}{2 \times 20 \times 960} = 100$. But if $x^2 = 100$, $x = \sqrt{100} = 10$; hence, the depth of the beam must be 10 inches. *Ans.*

The problems just given will suffice to show the importance of knowing some method of extracting the square root of numbers.

PERCENTAGE

165. It is frequently desirable to compare numbers or quantities not in relation to each other, but in relation to some fixed number, called the **base.** For example, the sum of 7, 6, and 12 is 25. Now to compare 7, 6, and 12 with 25, form the ratios 7 : 25, 6 : 25, and 12 : 25. The values of these ratios are found by dividing the first terms by the second, thus obtaining $\frac{7}{25} = .28$, $\frac{6}{25} = .24$, and $\frac{12}{25} = .48$. Note that the sum of the fractions is $\frac{7}{25} + \frac{6}{25} + \frac{12}{25} = 1$, and the sum of the decimal equivalents of the fractions is $.28 + .24 + .48 = 1.00 = 1$, also, as it must. In the case of the ratios, the base is 25; but in the case of the fractions and decimals, the base is 1, a much more convenient number, and one that does not change, as will continually be the case with ratios.

In business transactions, and in many other cases that arise in practice, it is convenient to have $\frac{1}{100} = .01$ as the base, thus making the values of the ratios 100 times as large as those obtained above. With .01 as the base, the values of the above ratios become $.28 \div \frac{1}{100} = .28 \times 100 = 28$, $.24 \times 100 = 24$, $.48 \times 100 = 48$, and $28 + 24 + 48 = 100$. In the last case, the three numbers added are called 28 *per cent*, 24 *per cent*, and 48 *per cent*, respectively, of 25, which is 100 *per cent* of 25.

The term **per cent** is an abbreviation of the Latin words *per centum*, which mean *by the hundred*, and **percentage** means a certain number of hundredths of some number. Thus, 28 per cent of 25 is $25 \times \frac{28}{100} = 25 \times .28 = 7$, and 7 is the percentage obtained by multiplying 25 by 28 hundredths. Also, 7 per cent of 438 is $438 \times \frac{7}{100} = 438 \times .07 = 30.66$, and 30.66 is the percentage obtained by multiplying 438 by 7 hundredths.

166. The sign or symbol that is used to denote per cent is %; thus, 7% is read 7 per cent, 11¼% is read 11¼ per cent, etc. The number that is placed before the symbol and shows how

many hundredths are to be taken or considered is called the **rate per cent;** thus, in the last sentence, 7 and $11\frac{1}{4}$ are rates per cent. When the rate per cent is expressed decimally or fractionally, thus denoting its actual value, it is called the **rate.** For instance, if the rate per cent is 5%, the rate is .05 or $\frac{5}{100}$; if the rate per cent is 58.7%, the rate is .587 or $\frac{58.7}{100} = \frac{587}{1000}$, etc.

The rate, therefore, is always equal to the rate per cent divided by 100; *and the rate per cent is* 100 *times the rate.*

167. The rate can frequently be expressed as a simple fraction by reducing the common-fraction form of the rate to its lowest terms. For instance, $6\frac{1}{4}\% = \frac{6\frac{1}{4}}{100} = \frac{25}{400} = \frac{1}{16}$, or $6\frac{1}{4}\% = \frac{6.25}{100} = \frac{625}{10000} = \frac{1}{16}$. In the table below, some of the rates per cent commonly used, with their decimal and common fraction equivalents, are given.

Rate Per Cent	Rate	Rate Per Cent	Rate
$1\frac{1}{2}$	$.015 = \frac{15}{1000}$	25	$.25 = \frac{1}{4}$
2	$.02 = \frac{1}{50}$	$33\frac{1}{3}$	$.33\frac{1}{3} = \frac{1}{3}$
$3\frac{1}{3}$	$.03\frac{1}{3} = \frac{1}{30}$	$37\frac{1}{2}$	$.375 = \frac{3}{8}$
4	$.04 = \frac{1}{25}$	40	$.4 = \frac{2}{5}$
$4\frac{1}{6}$	$.04\frac{1}{6} = \frac{1}{24}$	50	$.5 = \frac{1}{2}$
5	$.05 = \frac{1}{20}$	$62\frac{1}{2}$	$.625 = \frac{5}{8}$
$6\frac{1}{4}$	$.0625 = \frac{1}{16}$	$66\frac{2}{3}$	$.66\frac{2}{3} = \frac{2}{3}$
8	$.08 = \frac{2}{25}$	75	$.75 = \frac{3}{4}$
10	$.1 = \frac{1}{10}$	$83\frac{1}{3}$	$.83\frac{1}{3} = \frac{5}{6}$
$12\frac{1}{2}$	$.125 = \frac{1}{8}$	$87\frac{1}{2}$	$.875 = \frac{7}{8}$
$16\frac{2}{3}$	$.16\frac{2}{3} = \frac{1}{6}$	100	$1 = 1$
20	$.2 = \frac{1}{5}$	250	$2.5 = 2\frac{1}{2}$
$\frac{1}{8}$	$.00125 = \frac{1}{800}$	475	$4.75 = 4\frac{3}{4}$

168. The majority, if not all, of the fractions in the above table may be used to advantage in computing the percentage instead of their decimal equivalents. For example, to find $12\frac{1}{2}\%$ of 35.164, simply divide 35.164 by 8, obtaining 4.3955; this is correct, since $12\frac{1}{2}\% = \frac{1}{8}$, and $35.164 \times \frac{1}{8} = 35.164 \div 8$. Similarly, for the same reasons, $83\frac{1}{3}\%$ of $439.2 = 439.2 = \frac{5}{6}$ $= \frac{439.2 \times 5}{6} = 366$. It is evidently easier to multiply by the

fractions than it is to multiply by their decimal equivalents, and there is less liability of making mistakes.

169. The *base* may now be defined as the number that is multiplied by the rate to obtain the percentage. In the first case of Art. **168,** 35.164 is the base and 4.3955 is the percentage; in the second case, 439.2 is the base and 366 is the percentage. Consequently,

Rule.—*To find the percentage, multiply the base by the rate.*

Example.—Out of a lot of 1500 reams of paper, 37% were sold the first month and 43% were sold the second month; how many were sold in the two months?

Solution.—This problem may be solved in two ways: 1st method. The number of reams sold the first month is $1500 \times .37 = 555$; number sold the second month is $1500 \times .43 = 645$; number sold in the two months is then $555 + 645 = 1200$. *Ans.* 2d method. If 37% were sold the first month and 43% were sold the second month, 37% + 43% = 80% were sold in the two months; and $1500 \times .80 = 1200$ reams were sold in the two months. *Ans.*

170. If the product of the base and the rate equals the percentage, the rate must equal the percentage divided by the base, since the product of two factors divided by one of the factors must give the other factor for the quotient. Therefore,

Rule.—*To find the rate, divide the percentage by the base. The rate per cent is* 100 *times the rate.*

Example.—Out of a lot of 1500 reams of paper, 555 were sold; what per cent of the paper was sold?

Solution.—Here 555 is the percentage and 1500 is the base, since it is the number which, multiplied by some rate, gives a product of 555. Hence, $555 \div 1500 = .37$ = the rate, and $.37 \times 100 = 37$, the rate per cent. Therefore, the per cent of paper sold was 37%. *Ans.*

171. If the rate and percentage are known and it is desired to find the base, divide the percentage by the rate. This is evidently correct, since, if the product of the base and rate equals the percentage, the percentage divided by the rate must equal the base. Consequently,

Rule.—*To find the base, divide the percentage by the rate.*

Example.—In a certain month, 43% of a certain lot of pulp was sold; if the number of bales sold was 645, how many bales were in the lot?

Solution.—Here the rate is .43 and the percentage is 645; hence, the base is $645 \div .43 = 1500$, the number of bales in the lot. *Ans.*

172. It is to be noted that the rate per cent and the percentage really represent the same thing. The rate per cent is the number of parts in 100 parts of the base, while the percentage is the actual

number of parts of the base. In other words, the rate per cent is found on the assumption that the base is always 100, while the percentage is computed on the actual value of the base.

173. There are two other terms used in percentage—the *amount* and the *difference*. The **amount** is equal to the sum of the base and percentage, the **difference** is equal to the remainder obtained by subtracting the percentage from the base. To illustrate the meaning of these terms, suppose that the price of alum is \$42.00 per ton, and that the price was increased $12\frac{1}{2}\%$; what is the new price? $\$42 \div 8 = \$5.25 = 12\frac{1}{2}\%$ of \$42.00; then the new price is evidently \$42.00 + \$5.25 = \$47.25 = the *amount*, since it is equal to the sum of the base (\$42.00) and the percentage (\$5.25). Again, suppose, as before, that the price is \$42.00, but that the price is reduced $12\frac{1}{2}\%$, what is the new price? Since $12\frac{1}{2}\%$ of \$42.00 is \$5.25, the new price is \$42.00 − \$5.25 = \$36.75 = the *difference*, since it is equal to the base minus the percentage.

174. The amount may be found in an easier way. Since the base always represents 1 or 100%, the amount may be represented by 1 + rate or by 100% + rate per cent; hence, if the base and rate are given, the amount may be found by multiplying the base by 1 + rate. Thus, referring to Art. **173,** the new price after the increase is $\$42 \times (1 + .125) = \$42 \times 1.125 = \$47.25$, since $12\frac{1}{2}\% = .125$. Therefore,

Rule.—*The amount equals the base multiplied by* 1 *plus the rate.*

EXAMPLE.—If a man's wages is \$3.20 per day, and he receives an increase of 15%, how much does he then receive per day?

SOLUTION.—The base is \$3.20, the rate is .15, and the new rate of wages is the amount, which is $\$3.20 \times 1.15 = \$3.68$. *Ans.*

175. If the amount and the rate are known, and it is desired to find the base on which the rate was computed, divide the amount by 1 plus the rate. This is evidently correct, since the amount is equal to the base multiplied by 1 plus the rate. Hence,

Rule.—*To find the base, divide the amount by* 1 *plus the rate.*

EXAMPLE.—If a man receives \$3.68 cents per day in wages, and this is 15% more than he formerly received, how much did he formerly receive?

SOLUTION.—Here \$3.68 is some number plus 15% of that number; that is, \$3.68 is the amount and 15% is the rate per cent. Therefore, he formerly received $\$3.68 \div 1.15 = \$3.20$. *Ans.*

176. If the base and amount are given and it is desired to know the rate, divide the amount by the base and subtract 1 from the quotient. This is evidently correct, since dividing the amount

by the base gives a quotient that equals 1 plus the rate, and subtracting 1 from this leaves the rate.

Rule.—*To find the rate when the base and amount are known, divide the amount by the base and subtract* 1 *from the quotient.*

EXAMPLE.—If a man's wages are $3.68 per day and he formerly received $3.20 per day, what rate per cent. increase did he receive?

SOLUTION.—Here $3.68 is the amount, since it equals $3.20 plus a certain percentage of $3.20, the base. Consequently, $3.68 \div 3.20 = 1.15$; $1.15 - 1 = .15$, the rate; and $.15 \times 100 = 15\%$. *Ans.* The solution may also be obtained as follows: $3.68 − $3.20 = $0.48, the actual increase per day that he received, and which is the percentage. Hence, the rate is $.48 \div 3.20 = .15$, and the rate per cent is $.15 \times 100 = 15\%$. Therefore, also,

Rule.—*To find the rate when the base and the amount are known, subtract the base from the amount and divide the remainder by the base.*

The second rule is rather easier to remember and apply than the first rule.

177. The rules just given concerning the amount may also be used when the difference is given, by subtracting the rate instead of adding it. Thus, referring to Art. **173,** the new price after the old price had been reduced $12\frac{1}{2}\%$ is $\$42 \times (1 - .125) = \$42 \times .875 = \$36.75$. Therefore,

Rule.—*To find the difference, multiply the base by* 1 *minus the rate.*

In connection with problems relating to money and prices, the amount deducted from a fixed price or amount (the base) is called the **discount.** Insofar as percentage is concerned, the words *percentage* and *discount* mean the same thing, when finding the difference.

EXAMPLE.—If a certain article is priced at $4.75 and it is sold at a discount of 8%, how much was received for it?

SOLUTION.—The base is $4.75, the rate is .08, and the difference is required. Applying the rule, $\$4.75 \times (1 - .08) = \$4.75 \times .92 = \$4.37$. *Ans.* The solution may also be obtained as follows: $\$4.75 \times .08 = \$0.38$, the discount; $\$4.75 - \$0.38 = \$4.37$. *Ans.* Either method may be used, whichever appears to be easier.

178. If the difference and rate are known, and it is desired to find the base, divide the difference by 1 minus the rate. For, since the product of the base and 1 minus the rate equals the difference, the base must equal the difference divided by 1 minus the rate. Consequently,

Rule.—*To find the base when the rate and difference are known, divide the difference by* 1 *minus the rate.*

EXAMPLE.—$4.37 was paid for a certain article that was bought at a discount of 8%; what was the original price of the article?

SOLUTION.—Here $4.37 is the difference and .08 is the rate; the base = the original price = $4.37 ÷ (1 − .08) = $4.37 ÷ .92 = $4.75. *Ans.*

179. If the difference and base are known, and it is desired to find the rate, subtract the difference from the base and the remainder will be the discount; divide the discount by the base, and the quotient will be the rate.

EXAMPLE.—If an article is bought for $4.37 and the original price was $4.75, what was the per cent of discount received?

SOLUTION.—The actual discount received is $4.75 − $4.37 = $0.38, and $4.75 is the base; hence, 0.38 ÷ 4.75 = .08 = 8% of the original price = per cent of discount. *Ans.*

180. Chain Discount.—Certain manufacturers that deal in goods that are subject to rapid changes in prices issue catalogues in which the prices are quoted at a much higher figure than they think will ever be asked. They then issue what are called *discount sheets*, which are quickly printed, and are subject to change, in accordance with the state of the market. When more than one discount is quoted on any one article, it is called a **chain discount.** In computing a chain discount, that quoted first is deducted from the list price, the second discount is deducted from the remainder, the third discount from the last remainder, etc. *It is never allowable to add the rates of discount and then deduct.*

As an example, suppose that the price (catalog) of a certain article is $26.60, and that discounts of 60,10 and 5% are offered; what is the real price of the article?

$26.60 × (1 − .60) = $10.64, the price after 60% has been deducted. $10.64 × (1 − .10) = $9.576, or $9.58, the price after deducting 60 and 10%. $9.58 × (1 − .05) = $9.101 or $9.10, the price after all the discounts have been taken out.

This same result may be obtained by multiplying $26.60 by the continued product of 1 minus the different discounts, that is by (1 − .60) × (1 − .10) × (1 − .05) = .40 × .90 × .95 = .342; thus, $26.60 × .342 = $9.0972, or $9.10, as before. The real discount in this case is, therefore, 100 − 34.2 = 65.8%, which may be called the **equivalent discount,** and 1 − .342 = .658 may be called the **equivalent discount rate.**

Rule.—*To find the equivalent discount rate for any chain discount, subtract all the discount rates from* 1 *and find their product; then subtract this product from* 1. *The equivalent discount equals the equivalent discount rate multiplied by* 100. *The net price or*

net cost may be obtained by subtracting all the discount rates from 1, *finding their product, which multiply by the given price or cost.*

EXAMPLE.—A bill of goods amounting to $102.04 is subject to a chain discount of 87½, 10, 5, and 2½%; what is the equivalent discount per cent and how much must be paid to settle the bill?

SOLUTION.—The equivalent discount rate is $1 - (1. - .875) \times (1 - .10) \times (1 - .05) \times (1 - .025) = 1 - .125 \times .9 \times .95 \times .975 = 1 - .104203125 = .895796875$, or 89.5796875%. *Ans.* The amount to be paid to settle the bill is $\$102.04 \times .104203125 = \$10.63+$. *Ans.*

181. Gain or Loss Per Cent.—If an article is bought for a certain amount and is sold for another amount, there is a gain or loss equal to the difference between the two amounts. To find the gain or loss per cent, divide the gain or loss by the cost. Thus, if a manufacturer finds that it costs him $2.43 to turn out a certain article, and he sells it for $3.15, he gains $0.72, and the gain per cent is $.72 \div 2.43 = .2963$; $.2963 \times 100 = 29.63\%$. But if he had sold it for $2.25, he would have lost $\$2.43 - \$2.25 = \$0.18$, and the loss per cent. $= .18 \div 2.43 = .0741$;. $0741 \times 100 = 7.41\%$.

Again, suppose that the transmission system of a certain power plant is found to absorb 4.35 horsepower, but after making certain changes, it absorbs only 3.08 horsepower; what is the saving in per cent of horsepower wasted in transmission? The saving in horsepower is $4.35 - 3.08 = 1.27$; the horsepower wasted before the change is the base in computing the per cent; hence, $1.27 \div 4.35 = .292-$; and $.292 \times 100 = 29.2\%$. In other words, 29.2% of the power formerly wasted is saved by the change.

In calculations of this kind, it is sometimes a little difficult to determine which of the two given numbers is the base; this can always be determined correctly by remembering that a gain or loss involves a change of some kind; in the case of buying and selling, the selling is a change (of ownership); in the case of the power plant, 4.35 horsepower was changed to 3.08 horsepower. The number used to divide the gain or loss is the number that is *changed;* in the first illustration above, the number changed was $2.43, and in the second illustration it was 4.35.

Rule.—*To find the gain or loss per cent, divide the gain or loss by the number that is changed and multiply the quotient by* 100.

EXAMPLE 1.—Suppose the indicated horsepower of a certain non-condensing steam engine is 168, and that it is 204 after a condenser has been attached. What is the gain per cent in horsepower?

SOLUTION.—The horsepower before the change was 168, and after the

change it was 204; the gain is 204 − 168 = 36; 36 ÷ 168 = .2143, and .2143 × 100 = 21.43%, the gain per cent. *Ans.*

EXAMPLE 2.—A certain business is valued at $234,517.00; three years later, it is valued at $187,250; what was the depreciation in per cent?

SOLUTION.—The actual depreciation was $234,517 − $187,250 = $47,267; the value before the change was $234,517; 47,267 ÷ 234,517 = .2016−; hence, the depreciation in per cent was .2016 × 100 = 20.16%. *Ans.*

EXAMPLES

(1) What is 4¾% of $683.32 to the nearest cent? *Ans.* $32.46.

(2) If 475 is 62½% of some number, what is the number? *Ans.* 760.

(3) What is ⅜% of $4521? *Ans.* $16.95.

(4) What per cent of 840 is 119? *Ans.* 14⅙%.

(5) If an automobile was bought for $1350 and after being used for a year was sold for $925, what was the loss per cent? *Ans.* 31.48%.

(6) Bought some dye stuff for $21.85, receiving a discount of 5% from the selling price; what was the selling price? *Ans.* $23.00.

(7) A machinist turned 47 bolts in one day, which was almost 7% more than he turned the day before; how many did he turn the day before? *Ans.* 44.

(9) Bought a line of supplies, the bill amounting to $428.73 and subject to a discount of 33⅓, 10, and 3% if settled within ten days; how much is required to settle in ten days? *Ans.* $249.52.

(10) A test showed that the coal consumption in the boiler used to furnish steam for a non-condensing engine was 660 pounds per hour; after attaching a condenser, only 541 pounds of coal per hour were required. What was the saving per cent? *Ans.* 18+%.

(11) The average daily production of a paper mill in 1917 was 94 tons; in 1918, it was 105 tons; what was the per cent of increase? *Ans.* 11.7%.

(12) A mill was using 1.4 cords of wood per ton of paper; as the result of certain changes, a saving of 4% of wood was effected. What amount of wood was then used per ton? *Ans.* 1.344 cords per ton.

(13) A pulp mill increased its production 43%, producing 160 tons per day; how much did it formerly produce? *Ans.* 112 tons per day.

(14) If 165 pounds of clay is used in an order of 2240 pounds of paper, what per cent of the finished product is clay? *Ans.* 7.37%.

(15) A sample of paper weighs 9.372 grams, of which 0.621 grams are water and 8.751 grams are fiber; what is the percentage of water and fiber in the paper expressed as per cent? *Ans.* { 6.63% of water. 93.37% of fiber.

(16) A sample of coal shows 11.3% ash; assuming that all the combustible part of the coal is consumed, how many pounds of ashes must be handled per ton of 2240 pounds of coal? *Ans.* 253.12 pounds.

(17) After having been in use for some time, it was found that a 58-foot belt had stretched 3%; what was the length of the belt after being stretched? *Ans.* 59.74 feet.

(18) A paper shrinks 1.62% from wet end to calenders; if it was 164 inches wide on the wire, how wide is it when dry? *Ans.* 161.34 inches.

(19) How much bone dry fiber is contained in 793 tons of wet pulp, the moisture content being 43%? *Ans.* 452 tons.

(20) The bone dry weight of pulp is 90% of the air dry weight, which is the basis of payment. Referring to example 19, what is the equivalent air dry pulp? *Ans.* 502.22 tons.

COMPOUND NUMBERS

182. A **compound number** is one that requires more than one unit to express it; thus, if the length of a piece of hose is stated to be 12 feet 7 inches, 12 feet 7 inches is a compound number, because two units—the foot and the inch—are required to express the length. Had the length been stated as 12 $\frac{7}{12}$ feet, the number would be called a **simple number,** since only one unit—the foot—is required to express it.

Compound numbers are usually denominate numbers, a **denominate number** being one having its unit or units *denominated*, or named.

183. A denominate number is always a concrete number (see Art. 7), and when only one unit is named, as 5 yards, 8 pounds, etc., it is a simple number. An abstract number is usually a simple number, but it may be treated as a compound denominate number if desired. Thus, 364 may be regarded as 3 hundreds 6 tens 4 units.

184. In the case of abstract numbers, each figure belongs to a denomination that is ten times as large as the denomination of the next figure on its right and one-tenth as large as the denomination of the next figure on its left. In connection with denominate numbers, however, this is seldom or never the case. For instance, in the compound denominate number 4 yards 2 feet 8 inches, it takes 12 inches to make 1 foot, the next higher denomination, and it takes 3 feet to make 1 yard, the next denomination higher than feet. For this reason, it is necessary to memorize certain tables showing the relation of the different denominations for different compound numbers.

In order to save time and space in writing, the names of the units are abbreviated, and these abbreviations are given in the tables that follow.

185. The tables that follow should all be thoroughly committed to memory. Only the tables in common use are given here.

Under each table is a subsidiary table that shows the relation between the different units; it is not necessary to memorize these, although it will be found convenient to remember some of the principal equivalents, as, for example, that 5280 feet make a mile, that 36 inches make a yard, etc.

TABLE I

LINEAR MEASURE

12 inches (in.)	=	1 foot	ft.									
3 feet	=	1 yard	yd.									
5½ yards	=	1 rod	rd.									
40 rods	=	1 furlong	fur.									
8 furlongs (320 rd.)	=	1 mile	mi.									

mi.		fur.		rd.		yd.		ft.		in.
1	=	8	=	320	=	1760	=	5280	=	63,360
		1	=	40	=	220	=	660	=	7,920
				1	=	5.5	=	16.5	=	198
						1	=	3	=	36
								1	=	12

186. Another abbreviation for feet and inches, much used by draftsmen, mechanics, etc. is (′) for feet and (″) for inches; hence, 4 feet 8 inches may be written either 4 ft. 8 in. or 4′ 8″. When the latter form is used, it is advisable to place a dash between the feet and inches; thus, 4′—8″. The subsidiary table is useful in expressing higher units in terms of the lower units, and vice versa. For example, if it were desired to express 37 rd. in inches, the table shows that 1 rd. = 198 inches; hence, 37 rd. = 37 × 198 = 7326 in. Again, what fraction of a mile is 1360 feet? From the table, 1 mi. = 5280 ft.; hence, 1360 ft. = $\frac{1360}{5280}$ = $\frac{17}{66}$ mi. = .2576 − mi.

TABLE II

SQUARE MEASURE

144 square inches (sq. in.)	=	1 square foot	sq. ft.									
9 square feet	=	1 square yard	sq. yd.									
30¼ square yards	=	1 square rod	sq. rd.									
160 square rods	=	1 acre	A.									
640 acres	=	1 square mile	sq. mi.									

sq. mi.		A.		sq. rd.		sq. yd.		sq. ft.		sq. in.
1	=	640	=	102,400	=	3,097,600	=	27,878,400	=	4,014,489,600
		1	=	160	=	4,840	=	43,560	=	6,272,640
				1	=	30.25	=	272.25	=	39,204
						1	=	9	=	1,296
								1	=	144

187. A plot of ground in the form of a square, each side of which measures 208.71 feet, say 208 ft. 9 in., contains one acre.

TABLE III

CUBIC MEASURE

1728 cubic inches (cu. in.)	=	1 cubic foot	cu. ft.
27 cubic feet	=	1 cubic yard	cu. yd.
128 cubic feet	=	1 cord (wood)	cd.
24¾ cubic feet	=	1 perch (stone, masonry)	P.

cu. yd.		cu. ft.		cu. in.
1	=	27	=	46,656
		1	=	1,728

188. The cord is used only in measuring wood. A pile of wood 8 ft. long, 4 ft. wide, and 4 ft. high contains one cord. The perch is used in measuring stone and brick walls and other masonry. Some contractors allow 25 cubic feet to the perch, but 24 ¾ cubic feet is the correct value.

TABLE IV

AVOIRDUPOIS WEIGHT

437½ grains (gr.)	=	1 ounce	oz.
16 ounces	=	1 pound	lb.
100 pounds	=	1 hundredweight	cwt.
20 hundredweight (2000 lb.)	=	1 ton	T.

T.		cwt.		lb.		oz.		gr.
1	=	20	=	2000	=	32,000	=	14,000,000
		1	=	100	=	1,600	=	700,000
				1	=	16	=	7,000
						1	=	437.5

189. The ton of 2000 pound, called the **short ton,** is the one commonly used. The ton of 2240 pounds is called the **long ton,** and is used to weigh coal, pig iron, and other coarse commodities; it is the basis of freight rates on foreign exports. In connection with the long ton, 14 pounds make a stone, 2 stones make a quarter, 4 quarters make a hundredweight, and 20 hundredweight make a ton; hence,

LONG TON

T.		cwt.		qr.		st.		lb.
1	=	20	=	80	=	160	=	2240
		1	=	4	=	8	=	112
				1	=	2	=	28
						1	=	14

190. For measuring medicines, jewelry, gold, silver, etc., the Troy ounce, which contains 480 grains is used. The Troy pound contains 12 Troy ounces or 5760 grains. The Troy pound is therefore, only $\frac{5760}{7000} = \frac{144}{175}$th of an avoirdupois pound. A pound of gold thus weighs $5760 \div 437.5 = 13\frac{29}{175} = 13.1657 +$ avoirdupois ounces.

TABLE V.

LIQUID MEASURE

4	gills (gi.)	=	1 pint	pt.						
2	pints	=	1 quart	qt.						
4	quarts	=	1 gallon	gal.						
31½	gallons	=	1 barrel	bbl.						
2	barrels (63 gallons)	=	1 hogshead	hhd						

hhd.		bbl.		gal.		qt.		pt.		gi.
1	=	2	=	63	=	252	=	504	=	2016
		1	=	31.5	=	126	=	252	=	1008
				1	=	4	=	8	=	32
						1	=	2	=	8
								1	=	4

191. The United States, or wine, gallon contains 231 cubic inches, and a gallon of water weighs very nearly $8\frac{1}{3}$ pounds. A cubic foot contains $1728 \div 231 = 7.481$ gallons, or, roughly, $7\frac{1}{2}$ gallons. The British imperial gallon, used in Great Britain and Canada, contains 277.463 cubic inches, and a gallon of water at a temperature of 62 degrees Fahrenheit weighs exactly 10 pounds. The British imperial gallon is equal to 1.2 U. S. gallons, very nearly.

What is known as the fluid ounce is the weight of $\frac{1}{16}$th of a pint of water, or $\frac{1}{128}$th of a gallon of water. Since a gallon of water weighs $8\frac{1}{3}$ pounds, a fluid ounce weighs $8\frac{1}{3} \times 16 \div 128 = 1\frac{1}{24} = \frac{25}{24}$ ounces.

TABLE VI

DRY MEASURE

2 pints (pt.)	=	1 quart	qt.						
8 quarts	=	1 peck	pk.						
4 pecks	=	1 bushel	bu.						

bu.		pk.		qt.		pt.
1	=	4	=	32	=	64
		1	=	8	=	16
				1	=	2

192. The unit of dry measure is the Winchester bushel, which contains 2150.42 cubic inches; hence, the dry quart contains

$2150.42 \div 32 = 67.2$ cubic inches, while the liquid quart contains $231 \div 4 = 57\frac{3}{4}$ cubic inches. A box 14 inches square and 11.7 (say $11\frac{3}{4}$) deep, inside measurement, holds one bushel. The bushel is used in measuring charcoal and, sometimes, lime and coal. The British bushel is equal to 8 British imperial gallons; it therefore contains $277.463 \times 8 = 2219.704$ cu. in. and one British bushel equals $2219.704 \div 2150.42 = 1.03222$ — Winchester bushels. A cylinder $18\frac{1}{2}$ in. in diameter and 8 in. deep holds exactly one bushel.

TABLE VII

ANGULAR MEASURE

60 seconds (″) ..... = 1 minute ..... ′
60 minutes ..... = 1 degree ..... °
90 degrees ..... = 1 quadrant ..... ∟
4 quadrants (360°) ..... = 1 circle ..... cir.

cir.		quad. (∟)		deg. (°)		min. (′)		sec. (″)
1	=	4	=	360	=	21,600	=	1,296,000
		1	=	90	=	5,400	=	324,000
				1	=	60	=	3,600
						1	=	60

193. Table VII is very important in connection with all problems in which the measurement of angles is necessary for their solution. The circle is divided into 360 equal parts called **degrees;** each degree is divided into 60 equal parts called **minutes;** and each minute is divided into 60 equal parts called **seconds.** When the circle is divided into four equal parts, each part is called a **quadrant,** and the 4 equal angles so formed are called **right angles.** A quadrant and a right angle contain $360° \div 4 = 90°$.

194. Units of Measurement.—It should be evident from Art. 1 that before any measurement can be made it is necessary to establish a unit. For linear measurements (Table I), the fundamental unit, from which the other units are derived, is the **yard;** the yard is divided into three equal parts each of which is called **one foot;** the foot is divided into twelve equal parts, each of which is called **one inch.** The higher units, rods, furlongs, and miles, are obtained by taking a certain number of yards.

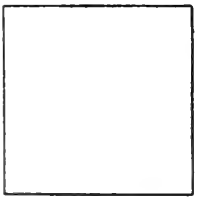

FIG. 2.

The units for square and cubic measure are obtained from those for linear measure; thus, the **square inch** is a square, every side of which measures 1 inch (see Fig. 2).

The **square foot** is a square every edge of which measures 1 foot or 12 inches. If a square foot be divided into 12 equal parts by lines *ab*, *cd*, etc., Fig. 3, and again divided into 12 equal parts by lines *mn*, *pq*, etc., every one of the little squares that are thus formed will be a square inch. Between *a* and *b*, there are 12 inch-squares, between *c* and *d*, 12 inch-squares, etc. Consequently, the foot-square has been divided into $12 \times 12 = 144$ inch-squares, and there are 144 square inches in 1 square foot. A *square yard* may be similarly divided into 9 foot-squares; hence, there are 9 square feet in 1 square yard. Note that $12 \times 12 = 12^2$ and $3 \times 3 = 3^2$; therefore, since there are 5.5 yards in a rod, a *square rod* contains $5.5^2 = 30.25 = 30\frac{1}{4}$ square yards; etc. The number of square units in any square may be found by squaring the length of the side of the square. It is for this reason that the second power of a number is usually called the *square*.

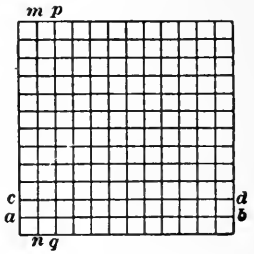

Fig. 3.

A cube measuring 1 inch on every edge is called a **cubic inch** (see Fig. 4). A **cubic foot** is a cube measuring 1 foot on every edge. Such a cube may be divided into 12 equal layers, each of which measures 12 inches on each side and 1 inch high. Each layer may therefore be divided into 12^2 equal cubes measuring 1 inch on each edge; that is, each layer may be divided into 12×12 inch-cubes; and since there are 12 layers, a cube measuring 12 inches (= 1 foot) on every edge may be divided into $12 \times 12 \times 12 = 12^3$ little cubes measuring 1 inch on every edge. Similarly, a **cubic yard** is a cube measuring 1 yard on every edge and may be divided into $3^3 = 27$ small cubes measuring 1 foot on every edge. Hence, a cubic foot contains $12^3 = 1728$ cubic inches, and a cubic yard contains $3^3 = 27$ cubic feet $= 36^3 = 46{,}656$ cubic inches. The number of cubic units in any cube may be found by cubing the length of one of the edges. It is for this reason that the third power of a number is called the *cube*.

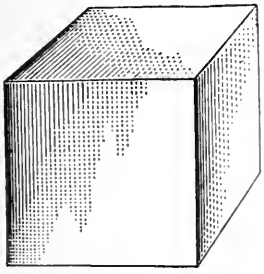
Fig. 4.

The fundamental unit of weight is the **pound avoirdupois**; the

other units of weight are found by dividing or multiplying the pound. The fundamental unit of liquid measure in the United States is the United States or wine gallon, which contains 231 cubic inches. In Canada the law allows the use of the Imperial gallon only for a commercial unit. Since the fundamental unit of dry measure is the Winchester bushel, which contains 2150.42 cubic inches, the units of both liquid and dry measures depend upon the unit of linear measure.

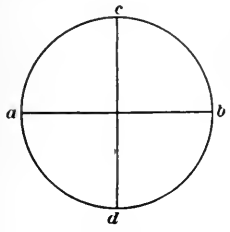

FIG. 5.

The fundamental unit of angular measure is the **quadrant** or the **right angle.** The circle is divided into 2 equal parts by a line drawn through the center called a *diameter*, as *ab*, Fig. 5. Each half is then divided into 2 equal parts by another diameter *cd*, thus dividing the entire circle into 4 equal parts. Each of these four equal parts is then divided into 90 equal parts to obtain degrees.

TABLE VIII

UNITED STATES MONEY

10 mills (m.)	=	1 cent	ct. or ¢.
10 cents	=	1 dime	d.
10 dimes (100c.)	=	1 dollar	dol. or $
10 dollars	=	1 eagle	E.

E.	$	d.	ct.	m.
1 =	10 =	100 =	1000 =	10,000
	1 =	10 =	100 =	1,000
		1 =	10 =	100
			1 =	10

NOTE.—With the exception of the mill and the eagle, the Canadian unit of money have the same names and relative values.

196. The fundamental unit of United States money is the **gold dollar,** which is defined as 25.8 grains of gold nine-tenths fine; that is, the gold dollar contains $25.8 \times .9 = 23.22$ grains of pure gold. It will be noted that the scale in the table of United States money is 10, the same as in the Arabic system of notation; it is therefore called a **decimal scale,** and numbers may be expressed in different units by simply shifting the decimal point. Thus, $12.43 = 1243c, and $978c = $9.78. Since there are 100¢ in $1, to change dollars to cents, multiply by 100, that is, shift the decimal point two places to the *right;* and to change cents to dollars, shift the decimal point two places to the *left.*

TABLE IX

TIME

60 seconds (sec.)	=	1 minute	min.
60 minutes	=	1 hour	hr.
24 hours	=	1 day	da.
7 days	=	1 week	wk.
365 days	=	1 year	yr.

yr.	da.	hr.	min.	sec.
1 =	365 =	8760 =	525,600 =	31,536,000
	1 =	24 =	1,440 =	86,400
		1 =	60 =	3,600
			1 =	60

197. The fundamental unit of time, universally used, is the **second.** The year does not contain exactly 365 days, but 365.242216 days = 365¼ days very nearly; hence, every fourth year, one day is added, making 366 days in what are called *leap years.*

TABLE X

MISCELLANEOUS

12 of anything	=	1 dozen	doz.
12 dozen	=	1 gross	gr.
12 gross	=	1 great gross	g. gr.

24 sheets of paper	=	1 quire	qr.
20 quires (480 sheets)	=	1 ream	rm.

198. A gross is evidently equal to $12 \times 12 = 144$. It is now quite common practice to consider a ream as 500 sheets, except for stationery papers.

THE METRIC SYSTEM

199. The **metric system** is thus called because it is based on the **meter** (also spelled metre), which is equal to 39.370113 inches. By Act of Congress, the meter contains 39.37 inches. Subdivisions of the meter are the *decimeter, centimeter,* and *millimeter,* and multiples of it are *dekameter, hektometer, kilometer,* and *myriameter.* The scale of the system is a decimal one, the same as with ordinary numbers and United States money. The prefixes *deci, centi,* and *milli* denote respectively one-tenth, one-hundredth, and one-thousandth of the unit to which they are prefixed, the same as the dime, cent, and mill denote one-tenth, one-hundredth, and one-thousandth of a dollar. The prefixes *deka, hekto, kilo,*

and *myria*, denote respectivly 10, 100, 1000, and 10,000 times the unit to which they are prefixed.

TABLE XI

LINEAR MEASURE

10 millimeters (mm.)	=	1 centimeter	cm.
10 centimeters	=	1 decimeter	dm.
10 decimeters	=	1 meter	m.
10 meters	=	1 dekameter	Dm.
10 dekameters	=	1 hektometer	Hm.
10 hektometers	=	1 kilometer	Km.
10 kilometers	=	1 myriameter	Mm.

200. The fundamental unit in the foregoing table is the *meter;* the other units that are principally used are the millimeter and centimeter for short lengths and the kilometer for long distances. The following table gives English equivalents for these units.

1 millimeter	= .03937 in.	= $\frac{5}{127}$ in. very nearly	= .04 inch roughly.
1 centimeter	= .3937 in.	= $\frac{25}{64}$ in. very nearly	= .4 in. roughly.
1 meter	= 39.37 in.	= $39\frac{3}{8}$ in. very nearly	= 40 in. roughly.
1 kilometer	= 39,370 in.	= $\frac{41}{64}$ mi. very nearly	= $\frac{5}{8}$ mile roughly.
1 meter	= 3.281 ft. nearly	= 1.094 yd. nearly.	

It will be observed that the abbreviations for the multiples of the principal unit begin with a capital letter, while those for the sub-multiples and for the principal unit itself begin with a lower case letter.

TABLE XII

SQUARE MEASURE

100 square millimeters (mm^2)	=	1 square centimeter	$cm.^2$
100 square centimeters	=	1 square decimeter	$dm.^2$
100 square decimeters	=	1 square meter	$m.^2$

201. This table does not include measures of land, the principal unit of which is the **Are** = 100 $m.^2$ The **hectare,** which equals 100 ares, or 100 × 100 = 10,000 square meters, takes the place of the English acre, and is equivalent to 2.471 acres, say $2\frac{1}{2}$ acres, roughly. 1 square meter = 1550 square inches, very nearly = 10.7641 square feet, say $10\frac{3}{4}$ square feet, roughly.

TABLE XIII

CUBIC MEASURE

1000 cubic millimeters ($mm.^3$)	=	1 cubic centimeter	c.c. or $cm.^3$
1000 cubic centimeters	=	1 cubic decimeter	$dm.^3$
1000 cubic decimeters	=	1 cubic meter	$m.^3$

1 cubic meter = 35.3156 cubic feet = 1.308 cubic yards.

TABLE XIV

LIQUID MEASURE

10 milliliters (ml.)	=	1 centiliter	cl.
10 centiliters	=	1 deciliter	dl.
10 deciliters	=	1 liter	l.
10 liters	=	1 dekaliter	Dl.
10 dekaliters	=	1 hektoliter	Hl.
10 hektoliters	=	1 kiloliter	Kl.

202. The principal units of liquid measure are the liter and the hectoliter. The **liter** is equal in volume to 1 cubic decimeter = 61.0254 cubic inches = 1.0567 quarts = $1\frac{17}{100}$ quarts. The hectoliter = 26.4179 gallons = .9435 barrel. The milliliter is used by physicians, chemists, scientists, and others for measuring small amounts. Since a milliliter is $\frac{1}{1000}$ of a liter, and since a liter equals a cubic decimeter = 1000 cubic centimeters, a milliliter = 1 cubic centimeter, and it is customary to call this unit a cubic centimeter instead of a milliliter. A teaspoon contains $\frac{1}{8}$ of a fluid ounce. 1 liter = 1 dm^3 = 61.0254 cu. in.; 1 quart = 57.75 cu. in. = 16 × 2 = 32 fluid ounces; $\frac{1}{8}$ of a fluid ounce = 57.75 ÷ 32 ÷ 8 = .225586 cu. in.; 1 milliliter = 1 cubic centimeter = 61.0254 ÷ 1000 = .0610254 cu. in. Therefore, 1 teaspoon = .225586 ÷ .0610254 = 3.6966, say 3.7 cubic centimeters, and 1 c.c. = .27052 teaspoon, or a little more than $\frac{1}{4}$ teaspoon. Also, 1 fluid ounce = 3.6966 × 8 = 29.5728 cubic centimeters = 30 c.c., nearly.

TABLE XV

MEASURES OF WEIGHTS

10 milligrams (mg.)	=	1 centigram	cg.
10 centigrams	=	1 decigram	dg.
10 decigrams	=	1 gram	g.
10 grams	=	1 dekagram	Dg.
10 dekagrams	=	1 hektogram	Hg.
10 hektograms	=	1 kilogram	Kg.
1000 kilograms	=	1 tonne	T.

204. The fundamental unit of weight in the metric system is **gram,** which is the weight of 1 cubic centimeter of water, weighed under certain conditions, and is equal to 15.432 grains, (more accurately, 15.432356 gr.). The **kilogram** (frequently called the **kilo**) = 1000 grams = the weight of 1 liter of water = 2.2046 pounds (more accurately, 2.20462234 pounds). The **tonne** (also called *metric ton*) = 1000 kilograms = the weight of

1 cubic meter of water = 2204.6 pounds. The metric ton is therefore approximately equal to the English long ton. The milligram is used by chemists for weighing minute quantities; it is equal to $\frac{1}{65}$ of a grain approximately, or $\frac{1}{64.8}$ gr. very accurately.

REDUCTION OF COMPOUND NUMBERS

205. To **reduce** a compound number is to change it so that the denominations used to express it will be different without changing the value of the number. For example, it may be desirable to express a certain number of miles, rods and feet as feet or inches; or it may be desired to express the number in miles and fraction of a mile. All such changes are called **reduction** or reducing the number to lower or higher denominations.

206. Reducing to Lower Denominations.—The process is best illustrated by means of an example. Thus, express 3 mi. 126 rd. 9 ft. in feet. Arranging the work as shown, multiply the number of rods in a mile (320) by the number of miles in the given number, in this case 3, and the product is the number of rods in 3 miles. To this add the number of rods in the given number, and the sum, 1086, is the number of rods in 3 mi. 126 rd. Since there are $16\frac{1}{2}$ feet in a rod, the product of 1086 and $16\frac{1}{2}$ = 17919 is the number of feet in 1086 rd. To this add the 9 ft. in the given number, and the sum is 17,928 ft., the number of feet in 3 mi. 236 rd. 9 ft. Had it been desired to reduce the number to inches, the last result would have been multiplied by 12, and as there are no inches in the given number, the final result would have been 17928 × 12 = 215,136 in. = 3 mi. 126 rd. 9 ft.

mi.	rd.	ft.
3	126	9
320		
960 rd.		
126		
1086 rd.		
$16\frac{1}{2}$		
543		
6516		
1086		
17919 ft.		
9 ft.		
17928 ft.	*Ans.*	

207. Rule.—*To reduce a compound number to lower denominations, find the product of the number representing the highest denomination in the given number and the number of units of the next lower denomination that will make one unit of the next higher denomination, and add to this product the number of units of that lower denomination, (if any) in the given number. Repeat this process*

to reduce to the next lower denomination, continuing in this manner until the required denomination has been used.

EXAMPLE 1.—Reduce 32° 47′ 19″ to seconds.

32° 47′ 19″
60
1920′
47
1967
60
118020″
19″
118039″ *Ans.*

SOLUTION.—The work is shown in the margin, and should be evident. Since there are 60 minutes in 1 degree, the product of 60 and 32 is first found, to which is added the 47.′ Since there are 60″ in 1 minute, the product of 60 and 1967 is then found, to which is added the 19″. The number is now reduced to the denomination required. Note that like numbers are added—minutes to minutes and seconds to seconds. It is not customary to write the abbreviations when reducing.

EXAMPLE 2.—Express 156 m., 5 cm., 2 mm. in millimeters.

SOLUTION.—Write the number without abbreviations, with a period following the number of units of the highest denomination, and with ciphers in place of any denomination that is missing. Since there are no decimeters, 156 m. 5 cm. 2 mm. = 156.052 meters. The process is exactly the same as writing a number in the Arabic system of notation. To reduce 156.052 m. to millimeters, multiply by 1000 by shifting the decimal point 3 places to the right, and 156.052 m. = 156.052 mm. *Ans.*

Had it been desired to express the above number in decimeters, multiply it by 10 by moving the decimal point 1 place to the right, obtaining 1560.52 dm.; to express it in centimeters, move the decimal point two places to the right, obtaining 15605.2 cm.

208. Reducing to Higher Denominations.—The process is best illustrated by an example. Thus, reduce 215,136 in. to higher denominations.

215136 in. (12
17928.0 ft. (16.5
165 1086
1428
1320
1080
990
90 = 9.0 ft.
1086 rd. (320
960 3 mi.
126 rd.
3 mi. 126 rd. 9 ft. *Ans.*

Since there are 12 inches in 1 foot, the number of feet in 215,136 inches may be found by dividing 215,136 by 12; there is no remainder, and the quotient is 17,928 ft. There are 16.5 feet in 1 rod; hence, the number of rods in 17,928 feet is found by dividing 17,928 by 16.5. The quotient is 1086 rd., and the remainder is apparently 90 ft. In reality, however, it is 9 ft., because the cipher in 90 is the one following the decimal point in the dividend, and has no value. Since there are 320 rods in 1 mile, divide

1086 rods by 320 to find how many miles there are in 1086 rd.; the quotient is 3 mi., and the remainder is 126 rd. Therefore, 215,136 in. = 3 mi. 126 rd. 9 ft.

Note that after any division has been completed, the remainder is of the same denomination as the dividend; this is necessarily the case, since the remainder is a part of the dividend. The quotient, however, is of a higher denomination than the dividend.

209. Suppose that instead of reducing the inches to a compound number the highest denomination of which, in this case, is a mile, it had been desired to express the number in miles and a fraction (decimal) of a mile. In such case, proceed in exactly the same manner as before, except that the quotient will in all cases be a mixed number (when there is a remainder), the division being carried to as many decimal places as is desired. Thus, in the example just given, 9 ft. = 9 ÷ 16.5 = .545454+ rd. Adding this to the 126 rd., the sum is 126.545454+ rd. Then, 126.545454 ÷ 320 = .39545454+ mile, which added to the 3 mi. makes 3.3954545 mi.

210. To reduce a decimal of one denomination to units of a lower denomination, proceed exactly in accordance with the rule of Art. **207.** Thus, .3954545 mi. = .3954545 × 320 = 126.54544 rd.; .54544 × 16.5 = 8.99976, say 9 ft. The result would have been exactly 9 ft. if instead of expressing the rods and feet as a decimal of a mile they are reduced to a fraction of a mile. Thus, $9 \div 16.5 = \frac{9}{16.5} = \frac{18}{33} = \frac{6}{11}$ rd.; $126 + \frac{6}{11} = 126\frac{6}{11} = \frac{1392}{11}$ rd. $\frac{1392}{11} \div 320 = \frac{1392}{3520} = \frac{87}{220} = .39\frac{6}{11}$ mi. This last expression will reduce to 126 rd. 9 ft. exactly.

211. Rule I.—*To reduce a denominate number to higher denominations, begin with the lowest denomination of the given number and divide the number of units of that denomination by the number of units required to make one unit of the next higher denomination, forming either a common fraction (which reduce to its lowest terms) or carrying the quotient to any desired number of decimal places. Add the quotient thus obtained to the number of units in the given number of the same denomination as the quotient (if any), and divide the sum by the number of units required to make one unit of the next higher denomination. Proceed in this manner until the desired denomination is reached.*

II. *If, however, it is desired to reduce a given number of units of a lower denomination to a compound number of higher denomination, divide the given number by the number of units required to make one unit of the next higher denomination; the quotient will be of the next higher denomination, and the remainder (if any) will be of the same denomination as the dividend. If the quotient is larger than the number of units required to make a unit of the next higher denomination, divide it by the number of units required to make one unit of the next higher denomination. Proceed in this manner until the highest denomination is reached or a quotient is obtained that is smaller than the number of units required to make a unit of the next higher denomination.*

Example.—Reduce 123,456″ to a compound number; also express it in degrees and decimal of a degree to 5 decimal places.

60)123456″
60)2057′ + 36″
34° + 17′
34° 17′ 36″. *Ans.*

60)123456″
60)2057.6′
34.29333° + *Ans.*

Solution.—Dividing first by 60, the quotient is 205/′ and the remainder is 36″. Dividing again by 60, since there are 60′ in 1°, the quotient is 34° and the remainder is 17′. Since 34° is less than 90°, the number of degrees necessary to make a quadrant, the work ceases, and 123,456″ = 34° 17′ 36″. The work for reducing to degrees and decimal of a degree is evident.

Example 2.—Express 3250615 milligrams in kilograms.

Solution.—Beginning with the right hand figure, move the decimal point one place to the left for each higher denomination until the desired denomination is reached. Thus, say milligrams, centigrams, decigrams, grams, dekagrams, hektograms, kilograms, placing the pencil point on the position occupied by the decimal point in each case, it being to the right of the milligrams in the beginning. When kilograms is reached, the pencil point will fall between 5 and 3; consequently, 5320615 mg. = 5.320615 Kg. *Ans.*

This same method may be used in reducing metric numbers (except those for square and cubic measure) to lower denominations. For square measure, move the decimal point two places each time the name of a denomination is pronounced, and for cubic measure, move it three places. For instance, 59308726 mm^2 = 59.308726 m^2, and 607849358 c.c. = 607.849358 m^3. Also, 78.06342 m^2 = 780634.2 cm^2 = 78063420 mm^2, and 9.50783 m^3 = 9507830 c.c. = 9507830000 mm^3.

212. Another way of reducing the lower units of a compound number to a decimal or fraction of higher denomination is the following: To express 23 rd. 3 yd. 1 ft. 8 in. as a decimal of a mile, first reduce the compound number to the lowest denomination in the given number, in this case inches, and 23 rd. 3

rd.	yd.	ft.	in.
23	3	1	8
5.5			
115			
115			
126.5			
3			
129.5 yd.			
3			
388.5			
1			
389.5 ft.			
12			
4674.0			
8			
4682 in.			

yd. 1 ft. 8 in. = 4682 in. Referring to Table I, and consulting the subsidiary table, it is seen that there are 63360 inches in a mile; hence, 4682 in. is $\frac{4682}{63360}$th of a mile. Reducing this fraction to a decimal, $\frac{4682}{63360}$ = .073895+. Therefore, 23 rd. 3 yd. 1 ft. 8 in. = .073895 mi.

This method is to be preferred to the former one, when reducing to a decimal or a fraction of a higher denomination, since it entails no more work, if as much, and is, in general, more accurate.

EXAMPLES

(1) Reduce 5 mi. 3 fur. 36 rd. 4 yd. 2 ft. 7 in. to inches. *Ans.* 347,863 in.
(2) Reduce the number in (1) to miles and decimal of a mile. *Ans.* 5.490276 mi.
(3) Reduce 13 bbl. 23 gal. 1 pt. to pints. *Ans.* 3,461 pt.
(4) Reduce the number in (3) to barrels and decimal of a barrel. *Ans.* 13.73413 bbl.
(5) Reduce 3 T. 13 cwt. 71 lb. 12 oz. to ounces. *Ans.* 117,948 oz.
(6) Reduce the number in (5) to tons and decimal of a ton. *Ans.* 3.685875 T.
(7) Reduce 14° 9′ 54″ to seconds. *Ans.* 50,994″.
(8) Express 14° 9′ 54″ in degrees and decimal of degree. *Ans.* 14.165°.
(9) Reduce 75,906″ to a compound number. *Ans.* 21° 5′ 6″.
(10) Reduce 75,906″ to degrees. *Ans.* 21.085°.
(11) Reduce 50,000 in. to a compound number. *Ans.* 6 fur. 12 rd. 2 yd. 2 ft. 8 in.

OPERATIONS WITH COMPOUND NUMBERS

213. Addition.—Compound numbers are added in practically the same manner as abstract numbers. The numbers to be added are arranged under one another with like denominations in the same columns. Then, beginning with the lowest denomination, add the numbers in that column; if the sum is greater than the number of units required to make a unit of the next higher denomination, reduce it to the next higher denomination and carry to the next column the number of units so found of that next

higher denomination. The process is repeated for the second and subsequent columns.

EXAMPLE 1.—Add 15° 20′ 36″, 21° 53′ 46″, 8° 49′ 28″, and 76° 51′ 17″.

SOLUTION.—The numbers are arranged as shown in the margin, with seconds under seconds, minutes under minutes, etc. The sum of the second's column is 127″ = 2′ 7″; write the 7″ and carry the 2′ to the next column, adding the 2′ to the numbers in that column. The sum thus obtained is 175′ = 2° 55′. The 2° is carried to the next column, making the sum 122°, and the sum of all the numbers is 122° 55′ 7″. It is not customary to write the sums of the columns, as shown here; only the final results are written, unless there are fractions as in the next example.

15°	20′	36″
21	53	46
8	49	28
76	51	17
122	175	127

122° 55′ 7″. *Ans.*

EXAMPLE 2.—Add 11 rd. 4 yd. 2 ft. 4 in., 34 rd. 1 yd. 9 in., 27 rd. 3 yd. 1 ft. 6 in., and 17 rd. 1 yd. 1 ft. 2 in.

SOLUTION.—The numbers are arranged as in example 1, and the sum as found is 2 fur. 10 rd. 4.5 yd. 2 ft. 9 in. Since it is inconvenient to have a fraction in any but the lowest denomination, reduce the .5 yd. obtaining 1 ft. 6 in., which is added as shown, making the final sum 2 fur. 10 rd. 5 yd. 1 ft. 3 in.

	rd.	yd.	ft.	in.
	11	4	2	4
	34	1		9
	27	3	1	6
	17	1	1	2
	90	10	5	21
2 fur.	10	4½	2	9
		5yd. =	1	6

2 fur. 10 rd. 5 yd. 1 ft. 3 in. *Ans.*

Rule.—*Place the numbers to be added under each other, with like denominations in the same columns. Add each column, beginning with that of the lowest denomination. If the sum of the numbers in any column is greater than the number of units required to make a unit of the next higher denomination, reduce the sum to the next higher denomination before adding the next column. When the sum has been found, if the number of units in any denomination contains a fraction, reduce the fraction of a unit to lower denominations and add to the units of lower denomination in the sum previously found.*

214. Subtraction.—The operation of subtraction is practically the same as in subtraction of abstract numbers. Place the subtrahend under the minuend, with like denominations under each other. If the number of units of any denomination in the subtrahend is larger than the number above it, reduce one unit of the next higher denomination to the next lower, add it to the number of units of that denomination in the minuend, and then

subtract. Add 1 to the number of units in the next column of the subtrahend before subtracting. This process is exactly similar to that employed in subtracting abstract numbers.

EXAMPLE 1.—Subtract 34° 27′ 17″ from 90°.

SOLUTION.—Placing the subtrahend under the minuend, there are no seconds in the minuend; hence, 1′ = 60″ is added to the minuend, and 60″ − 17″ = 43″. Adding 1′ to 27′, the sum is 28′, and 60′ − 28′ = 32′. Adding 1° to 34°, the sum is 35°, and 90° − 35° = 55°. The remainder, therefore, is 55° 32′ 43″.

90° 00′ 00″	
34 27 17	
55° 32′ 43″.	*Ans.*

EXAMPLE 2.—From 34 rd. 1 yd. 9 in. subtract 27 rd. 3 yd. 1 ft. 6 in.

SOLUTION.—Arranging the numbers as in example 1, 1 ft. cannot be subtracted from 0 ft.; hence, 1 yd. = 3 ft. is added to the minuend, and 3 ft. − 1 ft. = 2 ft. Adding 1 to the 3 yd. makes 4 yd.; but 4 yd. cannot be subtracted from 1 yd.; hence, 1 rd. = 5½ yd. is added to the minuend, making 1 + 5½ = 6½ yd., and 6½ yd. − 4 yd. = 2½ yd. Finally, 27 rd. + 1 rd. = 28 rd., and 34 rd. − 28 rd. = 6 rd. The ½ yd. is reduced to 1 ft. 6 in. and added, the sum being 3 ft. 9 in. But 3 ft. = 1 yd.; hence, the number of yards is increased by 1, making the final sum 6 rd. 3 yd. 9 in.

rd.	yd.	ft.	in.	
34	1	0	9	
27	3	1	6	
6	2½	2	3	
		1	6	
6 rd.	3 yd.		9 in.	*Ans.*

Rule.—*Place the subtrahend under the minuend, with like denominations in the same columns. Beginning with the column of lowest denomination, subtract the numbers in the bottom row from those above them. If the number in any column of the subtrahend is larger than the number above it in the minuend, reduce one unit of the next higher denomination to the next lower denomination, add it to the minuend, then subtract, and add* 1 *to the number in the column of the next higher denomination in the subtrahend. Continue in this manner until the entire remainder has been found.*

215. Multiplication.—A compound number may be multiplied by an abstract number in two ways: 1*st.*, by multiplying the units of each denomination separately, and reducing the products to higher denominations; this is advisable when the multiplier is a small number. 2*d*, reduce the compound number so that it will be expressed in units of one denomination, preferably, the lowest denomination in the compound number, then multiply, and reduce the product to higher denominations; this process is preferred when the multiplier is a large number, say greater than 12, or when it contains a fraction or a decimal.

EXAMPLE 1.—Multiply 56 T. 13 cwt. 72 lb. by 8.

SOLUTION.—The product of 8 and 72 lb. is 576 lb. = 5 cwt. 76 lb. Then 13 cwt. × 8 = 104 cwt., to which is added the 5 cwt. carried from the first product, making 109 cwt. = 5 T. 9 cwt. Lastly, 56 T. × 8 = 448 T., to which is added the 5 T. carried from the preceding product, making 453 T. The final product is 453 T. 9 cwt. 76 lb.

T.	cwt.	lb.
56	13	72
		8
453	109	576

453 T. 9 cwt. 76 lb. *Ans.*

EXAMPLE 2.—Multiply 7 gal. 3 qt. 1 pt. by 53.

SOLUTION.—Reducing to pints, 7 gal. 3 qt. 1 pt. = 63 pt.; 63 pt. × 53 = 3339 pt. = 6 hhd. 1 bbl. 7 gal. 3 qt. 1 pt. When reducing 3339 pt. to higher denominations, the first result obtained is 6 hhd. 1 bbl. 7½ gal. 1 qt. 1 pt. Since ½ gal. = 2 qt., the final result without fractions is 6 hhd. 1 bbl. 7 gal. 3 qt. 1 pt. *Ans.*

Rule I.—*Begin with the lowest denomination in the given number, and multiply the number of units of that denomination by the multiplier; reduce the product to the next higher denomination by dividing by the number of units required to make* 1 *of the next higher denomination, and add the quotient to the product of the number of units in the next higher denomination and the multiplier. Proceed in this manner until the complete product has been found. If a fraction occurs in connection with any product, reduce it to lower terms.*

II. *If the multiplier is greater than* 12, *or if it contains a fraction or a decimal, reduce the multiplicand to the lowest denomination given, multiply, and reduce the product to higher denominations.*

EXAMPLE.—Multiply 5 yd. 2 ft. 9 in. by 11.7.

SOLUTION.—Reducing to inches, 5 yd. 2 ft. 9 in. = 213 in.; 213 in. × 11.7 = 2492.1 in. = 69 yd. 8.1 in., or 12 rd. 3 yd. 8.1 in. *Ans.*

216. Division.—There are two cases of division: dividing a compound number by an abstract number, in which case, the quotient is a compound number; or dividing a compound number by a compound number of the same kind, in which case, the quotient is an abstract number. The simplest method of performing the division (and in most cases, the easiest) is to reduce the dividend to the lowest denomination in the given number, divide, and reduce the quotient to higher denominations. If the divisor is also compound, reduce it to the same denomination as the dividend, and divide as in division of abstract numbers, the quotient being abstract.

EXAMPLE 1.—What is $\frac{1}{7}$th of 143° 25′ 41″?

SOLUTION.—143° 25′ 41″ = 516,341″; 516,341″ ÷ 7 = 73,763″ = 20° 29′ 23″. *Ans.* A somewhat easier method of performing this division

(which may be used whenever the divisor is small) is shown in the margin. Here proceed as in short division. Then, $143° \div 7 = 20° + 3°$ remainder; $3° = 180'$, which added to the $25'$, makes $205'$. $205' \div 7 = 29' + 2'$ remainder; $2' = 120''$, which added to the $41''$, makes $161''$; and $161'' \div 7 = 23''$. The work may be arranged as shown or the additions may be performed mentally. The latter practice is not recommended, however, as it tends to increase the liability of making a mistake.

$$\begin{array}{r} \overset{205}{180}\ \overset{161}{120} \\ 7)143°\ 25'\ 41'' \\ \hline 20°\ 29'\ 23''. \end{array} \quad \textit{Ans.}$$

Example 2.—How many flasks holding 2 gal. 1 qt. 1 pt. may be filled from a cask holding 52 gal. 1 qt.?

Solution.—Reducing both numbers to pints, 2 gal. 1 qt. 1 pt. = 19 pt.; 52 gal. 1 qt. = 418 pt.; $418 \div 19 = 22$; hence, 22 flasks may be filled. *Ans.*

Rule.—*If the divisor is abstract, reduce the dividend to the lowest denomination in the given number, divide, and reduce the quotient to higher denominations. If both dividend and divisor are compound, reduce them to the lowest denomination in either number and divide; the quotient will be abstract.*

EXAMPLES

(1) Find the sum of 17 cwt. 26 lb. 9 oz., 15 cwt. 83 lb. 11 oz., 22 cwt. 55 lb. 6 oz., 24 cwt. 71 lb. 8 oz., and 18 cwt. 48 lb. 5 oz. *Ans.* 4 T. 18 cwt. 85 lb. 7 oz.

(2) What is $\frac{1}{11}$th of 360°? *Ans.* $32°\ 43'\ 38\frac{2}{11}''$.

(3) Add 19 rd. 4 yd. 1 ft. 4 in., 31 rd. 2 yd. 9 in., 26 rd. 5 yd. 2 ft. 6 in., and 35 rd. 1 yd. 1 ft. 10 in. *Ans.* 2 fur. 33 rd. 3 yd. 5 in.

(4) The sum of the three angles of any plane triangle is 180°; if two of the angles of a triangle are $36°\ 13'\ 26''$ and $64°\ 45'\ 40''$, what is the other angle? *Ans.* $79°\ 0'\ 54''$.

(5) A piece of tape line 2 rd. 1 yd. 2 ft. 5 in. long was used to measure the distance between two points about one mile apart. The tape was applied 172 times; what was the distance between the points?

Ans. 1 mi. 2 fur. 2 yd. 1 ft. 8 in.

(6) The distances between the centers of the faces of a number of pulleys on a main shaft were as follows: 5 ft. $8\frac{1}{2}$ in., 8 ft. $6\frac{1}{4}$ in., 7 ft. $3\frac{1}{2}$ in., 10 ft. $9\frac{3}{4}$ in., 9 ft. $4\frac{1}{2}$ in., 6 ft. $7\frac{1}{4}$ in. What was the distance between the first and last pulleys? *Ans.* 48 ft. $3\frac{3}{4}$ in.

(7) A coal hod was found to hold 38 lb. 13 oz. of coal; how many times will a ton of coal fill the hod? *Ans.* 51.5+times.

(8) Bought a car of pulp weighing 47,526 lb. on which the freight rate was 17 cents per hundredweight; how much was the bill for freight? Remember that all freight rates are computed on the basis of 2240 pounds to the ton, hence, a hundredweight here contains 112 pounds. *Ans.* \$72.14.

(9) The weight of a cargo of pulp was 3923 tons 1458 pounds; what was the freight bill, if the rate was \$12.75 per ton? *Ans.* \$50,026.55.

(10) What was the cost of a belt 95 ft. $7\frac{1}{2}$ in. long at 32¢. per foot? *Ans.* \$30.60.

(11) A machine makes 1836 pounds of paper per hour; in what time will it make $27\frac{1}{2}$ tons of 2240 pounds. *Ans.* 33 hr. 33 min.

THE ARITHMETICAL MEAN

217. The **arithmetical mean** of several numbers (or quantities) is the quotient obtained by dividing the sum of the numbers (or quantities) by the number of numbers (or quantities); it is the same as the **average** of several numbers (or quantities), and is usually called the **mean.** For example, if goods were bought from three different firms at discounts of 32%, 35%, and 36½%, the mean, or average, discount is $(32 + 35 + 36.5) \div 3 = 34.5\%$. This result presupposes that the same amounts were bought from each firm.

Now suppose that from one firm, the bill was \$126.40 and the discount was 32%; from another firm, the bill was \$87.65 and the discount was 35%: from the third firm, and bill was \$68.83 and the discount was 36.5%; what was the mean discount? Here it is necessary to multiply the amount of each bill by the discount

(*a*)

$$\begin{aligned} 126.40 \times 32\% &= 4044.8\% \\ 87.65 \times 35 &= 3067.75 \\ 68.83 \times 36.5 &= 2512.295 \\ \hline 282.88 \times x &= 9624.845 \end{aligned}$$

$$9624.845 \div 282.88 = 34.024\% = x$$

$$\$282.88 \times (1 - .34024) = \$186.63.$$

\$126.40 × .68	= \$ 85.95
87.65 × .65	= 56.97
68.83 × .635	= 43.71
	\$186.63

and then divide the sum of the products by the sum of the bills. The result as shown herewith is a mean discount of 34.024%. To prove that this is correct, multiply the amount of each bill by 1 minus the discount and add the products; the sum will evidently be the total amount to be paid, and it must equal the total amount less the mean discount, which is shown to be true, both being equal to \$186.63. The process is exactly the same as would be followed in finding the average (mean) price paid for 126.4 lb. of some article at 32 cents per pound, 87.65 lb. at 35 cents per pound, and 68.83 lb. at 36.5 cents per pound. The reason for the process is easily found. If the discount on \$1 is 32%, the discount on \$126.40 is $126.4 \times 32\% = 4044.8\%$. The total discount on \$282.88 is 9624.845%; hence, the average, or mean, discount is $9624.845\% \div 282.88 = 34.024\%$ on \$1.

EXAMPLE 1.—A machinist receives 52¢ per hour in wages. For every hour he works over 8 hours a day, he receives time-and-a-half. His overtime for one week was: Monday, 2½ hr.; Tuesday, 2 hr.; Wednesday, 3 hr.; Thursday, 2 hr.; Friday, 1½ hr.; Saturday, 1 hr. What was his average rate per hour for that week?

SOLUTION.—The total number of regular hours of work was $6 \times 8 = 48$, for which he received $48 \times 52¢ = \$24.96$. The number of hours that he worked overtime was $2.5+2+3+2+1.5+1=12$; his rate for overtime was $1.5 \times 52¢ = 78¢$; and he received for overtime work $12 \times 78¢ = \$9.36$. The total amount that he received for the week was $\$24.96 + \$9.36 = \$34.32$. The total number of hours worked was $48 + 12 = 60$. Therefore, his average, or mean, rate per hour for that week was $\$34.32 \div 60 = \$.572 = 57.2$ cents. *Ans.*

EXAMPLE 2.—It was desired to measure very accurately the distance between two punch marks. The result of measurements by five different persons was as follows: 10 ft. 8.1 in.; 10 ft. 8.16 in.; 10 ft. 7.97 in.; 10 ft. 8.21 in.; 10 ft. 8.05 in. Which of these measurements is nearest to the mean, or average, of all the measurements?

SOLUTION.—The sum of all the measurements is 50 ft. 40.49 in. The number of measurements is 5; hence, the mean is 50 ft. 40.49 in. ÷ 5 = 10 ft. 8.098 in. which is very nearly equal to the first measurement, and is nearer that than any of the others. The probable correct value is 10 ft. 8.1 in. Note that the 40 in. was not reduced to feet, because it is to be divided by 5.

	10 ft.	8.1 in.
	10	8.16
	10	7.97
	10	8.21
	10	8.05
5)	50	40.49
	10 ft.	8.098 in.

Ans.

EXAMPLE 3.—The floor area of a room in which 36 clerks are employed is 2960 square feet; what is the average number of square feet per clerk?

SOLUTION.—Evidently, the average number of square feet per clerk is $2960 \div 36 = 82\frac{2}{9}$, or a space about 9 ft. square for each clerk, since $9^2 = 81$. *Ans.*

EXAMPLES

(1) The daily production of a paper machine for one week was as follows: 97.6 T., 101.2 T., 98.5 T., 90 T., 103.1 T., 96.4 T.; what was the average daily production for the week? *Ans.* 97.8 T.

(2) The amount of sulphur used in making sulphite pulp was: In January, 149,721 lb. of sulphur for 508 tons of pulp; in February, 141,176 lb. for 476 T.; in March, 152,148 lb. for 519 T.; in April, 148,635 lb. for 493 T.; in May, 147,204 lb. for 527 T.; in June, 153,630 lb. for 468 T.; in July, 152,582 lb. for 483 T.; in August, 151,796 lb. for 479 T.; in September, 154,881 lb. for 492 T.; in October, 150,300 lb. for 512 T.; in November, 153,714 lb. for 483 T.; in December, 149,566 lb. for 506 T. What was the average amount of sulphur used per ton for the year? *Ans.* 303.625− lb. per T.

(3) Sold 1250 lb. of paper at 22¢ per pound; 6700 lb. at 20¢; 10,000 lb. at 18¢; 5500 lb. at 21¢; and 15,000 lb. at 17¢. What was the average price received per pound. *Ans.* 18.5176−¢.

ARITHMETIC

(PART 3)

EXAMINATION QUESTIONS

(1) Referring to example 1, Art. **164,** what is the diameter to the nearest 64th of an inch of a circle whose area is 218.7 sq. in.? *Ans.* $16\frac{4}{64} = 16\frac{1}{16}$ in.

(2) Referring to example 2, Art. **164,** with what velocity will a ball of lead strike the ground if it fall from a height of 338 ft.?

Ans. 147.45— ft. per sec.

(3) The area of a circle is proportional to the square of the diameter. The area of a circle whose diameter is $29\frac{7}{8}$ in. is 701 sq. in.; what is the diameter of a circle whose area is 500 sq. in., to the nearest 64th of an inch? *Ans.* $25\frac{15}{64}$ in.

(4) The price paid for a certain dye was $1.36 per ounce. This represented a dealer's profit of $33\frac{1}{3}\%$, a wholesaler's profit of $12\frac{1}{2}\%$, an importer's profit of $8\frac{1}{3}\%$, and a manufacturer's profit of 20%; what was the cost of manufacturing, after allowing 4 cents for handling, packing, etc.? Give result to the nearest cent. *Ans.* 66 cents per ounce.

(5) A bill for rubber hose amounted to $235.40, list price; discounts of 70, 30, 10 and 5% were allowed; (*a*) how much was actually paid to settle this bill? (*b*) what was the equivalent single discount?

Ans. { (*a*) $42.27. (*b*) 82.045%.

(6) A sample of coal shows 10.83% ash; if the weight of ashes obtained in one day is 1632 lb., actual weight, about how many long tons of coal were burned?

Ans. 6 T. 1629 lb. = 6.727 T.

(7) A firm desires to pay a special bonus of 2% on the commissions earned by its salesmen when the sales are in excess of a certain fixed amount; but the 2% is to be computed on the sales (commissions) after deducting the special bonus. What is the actual bonus, expressed as a per cent? *Ans.* 1.96+%.

(8) In a certain mill 35 men receive 42¢ per hour, 64 receive 73¢ per hour, 15 men receive 87½¢ per hour, and 5 men receive $1.12½ per hour; (*a*) what was the average wage per hour per man? (*b*) if they all received an increase of 12½%, what was the average wage per hour per man?

Ans. { (*a*) 67.37¢ per hr. (*b*) 75.79¢ per hr.

(9) By making certain changes, a pulp mill increased its daily production from 88 tons to 95 tons. The total cost of operation increased 25% and the price was increased 12½%; what was (*a*) the profit per cent after the change, and (*b*) what was the gain or loss per cent in profits, if the profit when the daily production was 88 tons was 18%?

Ans. { (*a*) 14.65− % (*b*) 18.6+ % loss.

(10) How many gallons are equivalent to 9.24 cu. ft.?

Ans. 69.12 gal.

(11) Add 5 yd. 2 ft. 7 in., 3 yd. 1 ft. 8 in., 4 yd. 9 in. and 3 yd. 2 ft. 10 in. *Ans.* 3 rd. 1 yd. 4 in.

(12) The sum of the three angles of any plane triangle is 180°; if two of the angles of a certain triangle are 36° 14′ 43″ and 65° 27′ 13″, what is the other angle? *Ans.* 78° 18′ 4″.

(13) Express 4.807 mi. in miles and lower denominations.

Ans. 4 mi. 6 fur. 18 rd. 1 yd. 11.52 in.

(14) Express 75° 18′ 18″ as a decimal part of 360°.

Ans. $0.2091805\frac{5}{9}$.

(15) What is (*a*) the weight in ounces of 57 c.c. of water? (*b*) what is the equivalent volume in cubic inches.

Ans. { (*a*) 2.0106+ oz. (*b*) 3.4784+ cu. in.

(16) Divide 26 mi. 6 fur. 22 rd. 3 yd. 2 ft. 6 in. by 15.

Ans. 1 mi. 6 fur. 12 rd. 2 ft. 11.6 in.

(17) Reduce (*a*) 1 mi. 6 fur. 12 rd. 2 ft. 11.6 in. to inches; (*b*) express this number in yards.

Ans. { (*a*) 113,291.6 in. (*b*) $3146\frac{88}{90}$ yd.

SECTION 2

ELEMENTARY APPLIED MATHEMATICS

(PART 1)

MATHEMATICAL FORMULAS

DEFINITIONS

1. A mathematical formula, or, more simply, a **formula, is an** expression composed of ordinary arithmetical numbers and quantities indicated by letters, which shows at a glance what operations (addition, subtraction, multiplication, division, powers, and roots) are required to be performed in order to obtain a certain desired result. Roughly speaking, a formula is a short, concise expression of a rule, law, or principle. For instance, refer to Fig. 1, which represents a cylinder with a round hole throughout its entire length. The rule for finding the weight of this hollow cylinder may be stated as follows:

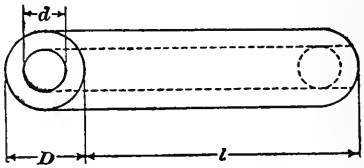

FIG. 1.

Rule.—*Multiply the sum of the diameters of the cylinder and hole by their difference; multiply this product by the length of the cylinder, by the weight in pounds of a cubic inch of the material of which the cylinder is composed, and by .7854, all measurements to be taken in inches. The final product will be the weight of the cylinder in pounds.*

To express this rule by a formula,

let W = weight of cylinder in pounds;

w = weight in pounds of a cubic inch of the material composing cylinder;

D = diameter of cylinder in inches;
d = diameter of hole in inches;
l = length of cylinder in inches;

then $$W = .7854wl(D + d)(D - d)$$

This last expression is a formula, and it shows at a glance just what operations are required in connection with the quantities w, l, D, d, and the number .7854 in order to find the value of W, the weight of the cylinder. All that is necessary in order to use the formula is to substitute in it the values of the quantities represented by the letters. Thus, suppose the diameter of the cylinder is 12 in., diameter of hole is 8 in., length of cylinder is 30 in., and that it is composed of cast iron, a cubic inch of which weighs .2604 pounds; what is the weight of the cylinder? Here $D = 12$, $d = 8$, $l = 30$, $w = .2604$; substituting these values for their corresponding letters in the formula,

$$W = .7854 \times .2604 \times 30(12 + 8)(12 - 8)$$
$$\text{or, } W = .7854 \times .2604 \times 30 \times 20 \times 4 = 490.8+ \text{ lb.}$$

2. When two or more letters in a formula are written with no sign of addition or subtraction between them or when a letter follows a number, *multiplication* is understood; multiplication is also understood when a letter precedes or follows a sign of aggregation when there is no + or − sign between or when two different signs of aggregation follow each other; therefore, $.7854wl(D + d)(D - d)$ has the same meaning as though written $.7854 \times w \times l \times (D + d) \times (D - d)$. Obviously, the sign of multiplication cannot be omitted between two numbers, since it would not then be possible to distinguish between the numbers.

3. Positive and Negative Quantities.—Before going further, it is necessary to make a distinction between quantities that indicate exactly *opposite* directions or meanings. For example, suppose two men start from the same position, one walking due north and the other due south; they are evidently walking in exactly opposite directions. To indicate this fact mathematically, one man is said to walk in a **positive** direction, while the other is said to walk in a **negative** direction. Suppose that north is taken as the positive direction; then if one man walks 6 miles due north and the other walks 6 miles due south, the first man is said to walk + 6 miles, and the second man is said to walk −6 miles. Positive quantities are always indicated by the *plus sign* and negative quantities by the *minus sign*. A negative quantity is

just as real as a positive quantity; it simply indicates a direction or meaning exactly opposite in character to that indicated by the positive quantity.

A man's income may be considered as positive and his expenditures as negative. If *going up* hill be considered positive, *going down* hill will be negative. When the mercury in a thermometer is *above* zero, the reading is considered positive; when it is *below* zero, the reading is negative; hence, 65 degrees above zero is written $+ 65°$, and 12 degrees below zero is written $- 12°$. If a *push* be considered positive, a *pull* will be negative. Many other instances may be cited; all that is necessary is that if any particular state, meaning, or direction be considered as positive, the state, meaning, or direction that is directly opposite in character will be negative. For instance, the direction in which the hands of a clock move, called *clockwise*, may be considered as positive; then if the hands are moved backward, or *counter-clockwise*, this direction will then be negative.

4. In connection with arithmetical problems, it is always possible to ascertain which of two numbers is the larger; or, if several numbers are under consideration, it is always possible to arrange them in their relative order of magnitude. But when quantities are represented by letters, it is seldom possible to arrange them in this manner, and it frequently happens that the subtraction of a larger quantity from a smaller may be indicated in a formula. The distinction between positive and negative quantities becomes of great importance when the quantities are represented by letters. For this reason, it is necessary to know how to add, subtract, multiply, and divide positive and negative quantities that are represented by letters.

When quantities are represented by letters, they are called **literal quantities,** to distinguish them from those represented by figures only or figures combined with a name (concrete numbers), which are called **numerical quantities.** The **numerical value** of any quantity is its value when expressed by figures. Thus, in Art. **1,** the numerical value of D was 12; of d, 8; of w, .2604, etc.

5. Coefficients and Exponents.—It was stated in Art. **2** that an expression like $5a$ means $5 \times a$. The number 5 which multiplies a is called the **coefficient** of a; the coefficient of any literal quantity is always a *multiplier* of the quantity. In $3\frac{1}{2}m$, $18apq$, $3(a + 7b)$, etc., $3\frac{1}{2}$, 18, 3, etc. are the coefficients of m, apq, $(a + 7b)$, etc.

It is frequently convenient to represent the coefficients by letters; thus, the area of a circle is expressed by the formula $A = \pi r^2$ in which π represents 3.141592+ (usually taken as 3.1416), and r represents the radius of the circle. In $18apq$, $18a$ may be considered as the coefficient of pq, and $18ap$ may be considered as the coefficient of q. Here 18 is the *numerical coefficient* of apq, while a and ap are *literal coefficients* of pq and q, respectively. In general, however, the word coefficient refers only to the numerical coefficient. If no numerical coefficient is given, it is always understood to be 1. Thus, the coefficient of mn is $+1$, and $mn = +1mn$; the coefficient of $-ay$ is -1, and $-ay = -1ay$. Note that when no sign is prefixed to a literal expression, it is always understood to be $+$; thus, $18\,apq = +18apq$. The minus sign, however, is never omitted; hence, the numerical coefficient in $-23bx$ is -23.

6. Exponents have the same meaning in connection with literal quantities that they have when used with numbers. For instance, $an^2 = a \times n \times n$; $-4a^2b^3 = -4 \times a \times a \times b \times b \times b$; $8xy = 8 \times x^1 \times y^1$; etc. Note particularly that any quantity, whether numerical or literal, that has 0 for an exponent is always equal to 1; thus, $m^0 = 1$, $56^0 = 1$, etc. The reason for this will be explained in connection with division of literal quantities.

Exponents may also be negative, in which case, the quantity affected with a negative exponent is always equal to 1 divided by the quantity when the exponent is the same, but positive; thus, $x^{-2} = \frac{1}{x^2}$, $-15ay^{-3} = \frac{-15a}{y^3}$, etc. When no sign is prefixed to a number or exponent, it is always understood to be $+$; hence, $2 = +2$, $x^2 = x^{+2}$, etc. 1 divided by a number or quantity is called the **reciprocal** of that number or quantity; thus, the reciprocal of 2.5 is $\frac{1}{2.5}$, the reciprocal of x^2 is $\frac{1}{x^2}$, etc. Therefore, any quantity affected with a negative exponent is equal to the reciprocal of that quantity affected with an equal positive exponent.

OPERATIONS WITH LITERAL QUANTITIES

7. Addition.—When several literal expressions are connected with one another by the signs $+$ and $-$, their sum is always understood. For instance, in the expression $27a^3 - 54a^2y +$

$36ay^2 - 8y^3$, the different parts connected by the signs + and − are called **terms.** The first term, $27a^3$ is understood to be $+27a^3$, the second term is $-54a^2y$, etc. The expression is equivalent to $+27a^3 + (-54a^2y) + 36ay^2 + (-8y^3)$.

8. Like terms are those having the same literal quantities affected with the same exponents, regardless of the coefficients; thus, $5ay^2$ and $8ay^2$ are like terms, and $-bm$ and $11bm$ are also like terms. In the expression of Art. **7,** no two of the terms are alike, whence they are called **unlike terms.** It might be thought at first that the second and third terms were alike, but they are not, since the letters do not have the same exponents.

9. Like terms may be added, but unlike terms cannot be added —the addition of unlike terms can only be indicated as above.

I. When adding literal quantities, a slightly different meaning is given to the term *addition* from that employed in arithmetic, because all numbers used in arithmetic are positive. Referring to Fig. 2, suppose a man desires to walk toward the point B;

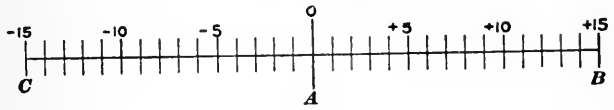

FIG. 2.

then any movement that takes him in the direction to the *right* may be called positive or +, and any movement that takes him in the opposite direction or toward the *left* will be negative or −, regardless of the point started from. Suppose he starts from A and takes 6 steps toward B; the distance advanced is then +6 steps. If he now takes 9 steps more in the same direction, he will advance +9 steps. The total distance advanced toward B is evidently +15 steps; therefore, the sum of +6 and +9 is +15. This case corresponds to ordinary addition in arithmetic.

II. Suppose, however, instead of walking toward B; he had walked toward C, starting from A, as before. If he takes first 6 steps and then 9 steps toward C, his first advance is −6 steps and his second advance is −9 steps, and his total advance is −15 steps; from which it is seen that $-6 + (-9)$, or $-6 - 9$, $= -15$. That is, *to find the sum of two negative quantities, add them and prefix the minus sign.*

III. Suppose he had walked first 6 steps toward B and then 9 steps toward C; he would evidently stop at −3, since counting

9 steps to the left from $+6$ makes him pause at -3. Therefore, $+6-9 = -3$ or $-9+6 = -3$.

IV. Suppose he had walked 6 steps toward C and then 9 steps toward B; he would evidently stop at $+3$. Therefore, $-6+9 = +3$ or $+9-6 = +3$.

From the foregoing, it is seen that *when two numbers have the same sign, their sum is the sum of the two numbers prefixed by the common sign; but when the numbers have unlike signs, the sum is equal to the difference of the two numbers prefixed by the sign of the greater number.*

10. To add two like terms having one or more literal quantities in them, all that is necessary is to add their coefficients and prefix to the sum the sign of the greater. For instance, $7ax + 4ax = 11ax$; $-3ax + 7ax = 4ax$; $12mn - 19mn = -7mn$; etc.

If there are more than two like terms to be added, find the sum of those having positive and those having negative coefficients separately, and then add the two sums; thus, $3a - 8a - a + 6a - 11a + 4a = -7a$, since $3a + 6a + 4a = 13a$, $-8a - a - 11a = -20a$, and $13a - 20a = -7a$.

To show that the sum may be found by simply adding the coefficients, consider the expression, $7c + 4c = 11c$. Suppose c represents 5 inches; then $7c = 7 \times 5$ in. $= 35$ in., $4c = 4 \times 5$ in. $= 20$ in., and 35 in. $+ 20$ in. $= 55$ in. But $7c + 4c = 11c = 11 \times 5$ in. $= 55$ in. In other words, 7 of something plus 4 of something is equal to $7 + 4$ or 11 of something, and it makes no difference what this something is, whether it is 1 in. or 5 in. or 105 in.; all that is necessary is that the terms be *alike*.

11. Subtraction.—Subtraction may be defined as the *difference* between two quantities; it may also be defined as that quantity which when added to the subtrahend will give the minuend for the sum. Thus, the difference between 15 and 6 is 9, and 9 is the number that will produce 15 for the sum when it is added to 6; here 6 is the subtrahend and 15 is the minuend. The second definition is the better one to use in connection with subtraction of literal quantities.

Referring to Fig. 2, call movement toward B positive or $+$ and movement toward C negative or $-$, as before.

I. Suppose two men to start from A; let one man walk 9 steps toward B, and the other 15 steps toward B; how far are they

apart? The distance between them is evidently $15 - (+9) = 6$, since $9 + 6 = 15$.

II. Suppose they had walked toward C the same number of steps; then the distance between them is $-15 - (-9) = -6$, since $-9 + (-6) = -15$.

III. Suppose one of the men had walked 9 steps toward B and the other 15 steps toward C; then the distance between them is $-15 - (+9) = -24$, the -24 meaning that the man at $+9$ would have to take -24 steps to place him at -15. Also note that $9 + (-24) = -15$.

IV. Suppose that one of the men had walked 15 steps toward B and the other 9 steps toward C; then the distance between them is $15 - (-9) = 24$, that is, the man at -9 would have to walk $+24$ steps to get to $+15$. Also note that $-9 + 24 = +15$.

It will be observed in the foregoing four cases that the difference may be found in each case by changing the sign of the subtrahend and proceeding as in addition. Thus, in **I**, the sign of the subtrahend is $+$; changing it to $-$ and adding, $15 - 9 = +6$. In **II**, $-15 + 9 = -6$; in **III**, $-15 - 9 = -24$; and in **IV**, $15 + 9 = +24$.

Therefore, *to subtract one term from another, change the sign of the subtrahend and proceed as in addition.* For example, $18ar - (7ar) = 11ar$; $12bd - (22bd) = -10bd$; $6m^2 - (-31m^2) = +37m^2$; $-22b^2y^3 - (-34b^2y^3) = +12b^2y^3$.

12. Multiplication.—The general rule for the signs in multiplication is: *If the coefficients of two terms that are multiplied have like signs, the sign of the coefficient in the product will be $+$; if they have unlike signs (one $+$ and the other $-$), the sign of the coefficient in the product will be $-$.* Thus, $+3 \times +5 = +15$, and $-3 \times -5 = +15$; also $-3 \times +5 = -15$, and $+3 \times -5 = -15$.

A little consideration will make this rule clear. Call a man's debts negative and his savings positive; then any tendency to increase the debts will be negative, and any tendency to increase the savings or to make the debts less will be positive. Now suppose the man saves 3 dollars each week for 5 weeks; at the end of 5 weeks, he will have saved $3 \times 5 = 15$ dollars. The 3 dollars and the 15 dollars are necessarily positive, representing savings; the factor 5 is also positive, because it indicates that 3 dollars was *saved* 5 times. Hence, $+3 \times +5 = +15$. In the same way, $+3 \times -5 = -15$, because this

operation indicates that 3 dollars was *spent* 5 times, the total amount spent being 15 dollars. Also, $-3 \times +5 = -15$, because this operation indicates that a debt of 3 dollars was *increased* 5 times, and an increase must be considered as positive, the total increase in *debt* being 15 dollars. Finally, $-3 \times -5 = +15$; here a debt of 3 dollars is *decreased* 5 times, because, if $+5$ indicates an increase, -5 must indicate a decrease; hence, if a man's debt decreases, the value of his assets increase, that is, there is a *positive* change, which amounts to $+15$ dollars. A similar line of reasoning may be applied to any similar case involving positive and negative, or opposite, changes or quantities.

The product must contain all the literal quantities in both multiplicand and multiplier; thus, $6b \times 9ay = 54aby$, the coefficient of the product being equal to the product of the coefficients of the factors. Hence, $-7a^2x \times 2ax^3 = -14a^2axx^3 = -14a^3x^4$. In other words, *if the same literal quantity occurs in both factors, it will have an exponent in the product equal to the sum of the exponents in the two factors.* In the last case, the exponent of a in the product is equal to $2 + 1 = 3$, and the exponent of x is equal to $1 + 3 = 4$. This is always the case, whatever the exponents, and whether positive or negative. Thus, $c^2z^5 \times c^{-4}z^{-2} = c^{-2}z^3$, since $2 - 4 = -2$, and $5 - 2 = 3$; also, $2.1d^{.79} \times 3.4d^2 = 7.14d^{2.79}$, since $2.1 \times 3.4 = 7.14$, and $2 + .79 = 2.79$.

13. Division.—The general rule for signs in division is very similar to that for multiplication. *If the dividend and divisor have like signs, the sign of the quotient is* $+$; *if they have unlike signs, the sign of the quotient is* $-$. To find the quotient, divide the coefficient of the dividend by the coefficient of the divisor, and the result will be the coefficient of the quotient; to this annex the literal quantities in both dividend and divisor, but changing the signs of the exponents in the divisor, and then add the exponents of like quantities. If any exponent then becomes 0, the value of the quantity having that exponent is 1, and it thus disappears from the quotient. For example, $48a^2b^3c \div -12a^2b = -4b^2c$, since $48 \div -12 = -4$, and $a^2b^3ca^{-2}b^{-1} = a^0b^2c = 1b^2c = b^2c$.

The proof for the law of signs in division is simple: As in arithmetic, the product of the divisor and quotient is the dividend (no remainder being considered). Letting d represent the dividend, p, the divisor, and q the quotient, $d = p \times q$. If d and p are both positive, q will also be positive, because $+p$

$\times + q = + pq = + d$; also, if d and p are both negative, q will be positive, because $- p \times + q = - pq = - d$. Further, if d is positive and p negative, q is negative, because $-p \times -q = + pq = + d$; also if d is negative and p positive, q is negative, because $+ p \times - q = - pq = - d$. Therefore, if the signs of the dividend and divisor are alike, the quotient is positive; if they are unlike, the quotient is negative.

In practice, the exponents of the literal quantities in the divisor are subtracted from the exponents of like quantities in the dividend; this produces the same result as changing the signs of the exponents. Thus, in the last example, the exponent of a in the quotient is $2 - 2 = 0$; of b, $3 - 1 = 2$; and as c does not occur in the divisor, it goes into the quotient unchanged.

To prove that any number having 0 for an exponent is equal to 1, let n represent any number or quantity, then $n \div n = 1$; but $n \div n = n^{1-1} = n^0$. Since the only way that 0 can be obtained for an exponent is to divide a number or quantity by itself, it follows that any number or quantity having 0 for an exponent is equal to 1. Similarly, $n^5 \div n^5 = n^{5-5} = n^0 = 1$.

14. Operations with Polynomials.—An expression consisting of but one term is called a **monomial** (the prefix *mo* is a contraction of *mon* meaning *one*); an expression consisting of but two terms is called a **binomial** (*bi* means *two*); an expression consisting of more than two terms is called a **polynomial** (*poly* means *many*).

Before performing any of the operations of addition, subtraction, multiplication, or division, it is always advisable to arrange the polynomials according to the **descending** powers of one of the letters; this is done by writing first that term containing the highest power of the letter chosen, then the term containing the next highest power, etc. until all the terms have been written. For example, arrange $2x^3y - 2axy^3 + x^5 - y^4 + x^2y^2 - a^2x^4$ according to descending powers of x. The term containing the highest power of x is x^5, that containing the next highest power of x is $-a^2x^4$, etc. consequently, the polynomial arranged according to descending powers of x is $x^5 - a^2x^4 + 2x^3y + x^2y^2 - 2axy^3 - y^4$. If it were desired to arrange the polynomial according to descending powers of y, the result would then be $-y^4 - 2axy^3 + x^2y^2 + 2x^3y - a^2x^4 + x^5$. Note that in the first polynomial as arranged, the last term does not contain x, and in the second arrangement, the last two terms do not include y.

15. To add two or more polynomials, first arrange the one containing the most terms according to the descending powers of one of the letters; then place under this the other polynomials, with like terms in the same columns, and add each column separately as in addition of monomials.

EXAMPLE 1.—Find the sum of $x^2 - 3xy + y^2 + x + y - 1$, $2x^2 + 4xy - 3y^2 - 2x - 2y + 3$, $3x^2 - 5xy - 4y^2 + 3x + 4y - 2$, and $6x^2 + 10xy + 5y^2 + x + y$.

SOLUTION.—Arrange the first polynomial according to descending powers of x, and then place under it the other polynomials with like terms in the same columns. When adding polynomials, it is customary to begin at the *left*, instead of at the right, as in arithmetic, and this can be done because there is never anything to *carry* from one column to the next. The sum of the coefficients in the first column is 12, and the first term of the sum is $12x^2$.

$$\begin{array}{r} x^2 - 3xy + x + y^2 + y - 1 \\ 2x^2 + 4xy - 2x - 3y^2 - 2y + 3 \\ 3x^2 - 5xy + 3x - 4y^2 + 4y - 2 \\ 6x^2 + 10xy + x + 5y^2 + y \\ \hline 12x^2 + 6xy + 3x - y^2 + 4y. \quad Ans. \end{array}$$

The sum of the coefficients in the second column is $10 + 4 - 5 - 3 = 6$, and the second term of the sum is $6xy$. The sum of the coefficients in the third column is $1 + 3 + 1 - 2 = 3$, and the third term of the sum is $3x$. The sum of the coefficients in the fourth column is $5 + 1 - 4 - 3 = -1$, and the fourth term of the sum is $-y^2$. The sum of the coefficients in the fifth column is $1 + 4 + 1 - 2 = 4$, and the fifth term of the sum is $4y$. The sum of the numbers in the sixth column is $3 - 2 - 1 = 0$, and the entire sum is $12x^2 + 6xy + 3x - y^2 + 4y$.

EXAMPLE 2.—Find the sum of $4a - 5b + 3c - 2d$, $a + b - 4c + 5d$, $3a - 7b + 6c + 4d$, and $a + 4b - c - 7d$.

$$\begin{array}{r} 4a - 5b + 3c - 2d \\ a + b - 4c + 5d \\ 3a - 7b + 6c + 4d \\ a + 4b - c - 7d \\ \hline 9a - 7b + 4c. \quad Ans. \end{array}$$

SOLUTION.—Since the letters in all these polynomials have the same exponents, 1, arrange them according to the order of their letters, *i.e.*, alphabetically. The sum is then found in the same manner as in Example 1.

16. To subtract one polynomial from another, arrange the minuend according to descending powers of one of the letters, place the like terms of the subtrahend under it in the same columns, and subtract each term of the subtrahend from the term above it in the minuend, as in subtraction of monomials. If the subtrahend contains a term not in the minuend, change its sign and write it in the remainder; and if the minuend contains a term not in the subtrahend, write it in the remainder with its sign unchanged.

EXAMPLE 1.—From $4x^3 - 2x^2 + 3x^4 - 1 + 7x$ subtract $6x + 1 - x^4 + 2x^3 - 2x^2$.

SOLUTION.—Arranging the minuend according to descending powers of x, and writing the subtrahend under it with like terms in the same columns, begin at the left and subtract each term of the subtrahend from that above it in the minuend. Since $3 - (-1) = 4$, the first term in the remainder (difference) is $4x^4$. The second term of the difference is evidently $2x^3$, the third term is 0, the fourth term is x, and the coefficient of the fifth term is $-1 - (+1) = -1 - 1 = -2$. The final result obtained for the difference is $4x^4 + 2x^3 + x - 2$.

$$\begin{array}{l} 3x^4 + 4x^3 - 2x^2 + 7x - 1 \\ -x^4 + 2x^3 - 2x^2 + 6x + 1 \\ \hline 4x^4 + 2x^3 \qquad + x - 2. \quad Ans. \end{array}$$

EXAMPLE 2.—From $8am^5 - 13a^3m^3 + 18a^4m^2 - 29$ subtract $8am^5 + 4a^2m^4 + 14a^4m^2 - 24a^5m - 38$.

SOLUTION.—The arrangement according to descending powers of m, and allowing for missing powers in both subtrahend and minuend is shown below.

$$\begin{array}{llll} 8am^5 & - 13a^3m^3 + 18a^4m^2 & - 29 \\ 8am^5 + 4a^2m^4 & + 14a^4m^2 - 24a^5m - 38 \\ \hline - 4a^2m^4 - 13a^3m^3 + & 4a^4m^2 + 24a^5m + & 9. \quad Ans. \end{array}$$

As there is no term in the minuend over the second term of the subtrahend, change its sign and write it in the difference. There is no term in the subtrahend under the second term of the minuend; hence, bring it down into the difference as it stands. There is no term in the minuend over the fourth term of the subtrahend; hence, change its sign and bring it down into the difference. The rest of the work is evident, and the difference sought is $-4a^2m^4 - 13a^3m^3 + 4a^4m^2 + 24a^5m + 9$. That the result as obtained is correct may be proved by adding the difference to the subtrahend, using the work as it stands; the sum is the minuend.

17. To multiply a polynomial by a monomial, simply multiply separately each term of the polynomial by the multiplier. It is customary to arrange the multiplicand according to the descending powers of one of the letters and begin the multiplication with the term containing the highest power, *i.e.*, begin at the left.

EXAMPLE.—Multiply $5x^3 - 2ax^2 + 7a^2x - 14a^3$ by $4a^2x^3$.

SOLUTION.—The multiplicand is already arranged according to the descending powers of x. Multiplying each term separately by $4a^2x^3$, the product is $20a^2x^6 - 8a^3x^5 + 28a^4x^4 - 56a^5x^3$. The product is easily found in this case without placing the multiplier under the multiplicand, but this has been done in the margin to show how the work is arranged. Beginning at the left and taking each term of the multiplicand in succession, $5x^3 \times 4a^2x^3 = 20a^2x^6$, $-2ax^2 \times 4a^2x^3 = -8a^3x^5$, etc.

$$\begin{array}{l} 5x^3 - 2ax^2 + 7a^2x - 14a^3 \\ 4a^2x^3 \\ \hline 20a^2x^6 - 8a^3x^5 + 28a^4x^4 - 56a^5x^3. \quad Ans. \end{array}$$

18. To multiply a polynomial by a binomial or another polynomial, arrange both multiplicand and multiplier according to

descending powers of one of the letters, placing the first term of the multiplier under the first term of the multiplicand. Then multiply each term of the multiplicand by the first term of the multiplier; the result will be the first partial product. Multiply each term of the multiplicand by the second term of the multiplier; the result will be the second partial product, which is written under the first partial product with like terms under each other. Proceed in this manner until all the terms of the multiplier have been used. Now add the partial products, and the sum will be the entire product.

EXAMPLE 1.—Multiply $4a^2 - 5ab + 6b^2$ by $a - 3b$.

SOLUTION.—Multiplying the multiplicand by a, the product is $4a^3 - 5a^2b + 6ab^2$, which is written under the multiplier. Now multiplying by $-3b$, the product of $4a^2$ and $-3b$ is $-12a^2b$, which is written in the same column as the $-5a^2b$ of the first partial product. Then $-5ab \times -3b = 15ab^2$, which is written in the column containing $6ab^2$. $6b^2 \times -3b = -18b^3$, which is written to the right of the preceding product. Adding the two partial products, the entire product is $4a^3 - 17a^2b + 21ab^2 - 18b^3$.

$$
\begin{array}{l}
4a^2 - 5ab + 6b^2 \\
a - 3b \\
\hline
4a^3 - 5a^2b + 6ab^2 \\
\quad - 12a^2b + 15ab^2 - 18b^3 \\
\hline
4a^3 - 17a^2b + 21ab^2 - 18b^3. \quad Ans.
\end{array}
$$

EXAMPLE 2.—Multiply $D + d$ by $D - d$.

SOLUTION.—The work is shown in the margin, and should be evident without any special explanation. The entire product is $D^2 - d^2$. It is to be noted that D and d are to be treated as though they were two different letters. This result shows that the product of the sum and difference of two numbers or quantities is equal to the difference of their squares, and the formula in Art. 1 may be written $A = .7854ul\,(D^2 - d^2)$. In the example that is given in connection with this formula, $D = 12$ and $d = 8$; $D^2 = 12^2 = 144$ and $d^2 = 8^2 = 64$; $144 - 64 = 80$. But $D + d = 12 + 8 = 20$; $D - d = 12 - 8 = 4$; $(D + d)\,(D - d) = 20 \times 4 = 80$, the same result in either case.

$$
\begin{array}{l}
D + d \\
D - d \\
\hline
D^2 + Dd \\
\quad - Dd - d^2 \\
\hline
D^2 \qquad - d^2. \quad Ans.
\end{array}
$$

EXAMPLE 3.—Multiply $x^4 + 2x^3 + x^2 - 4x - 11$ by $5x^2 - 2x + 3$.

SOLUTION.—The work is shown below and requires no special explanation.

$$
\begin{array}{l}
x^4 + 2x^3 + x^2 - 4x - 11 \\
5x^2 - 2x + 3 \\
\hline
5x^6 + 10x^5 + 5x^4 - 20x^3 - 55x^2 \\
\quad - 2x^5 - 4x^4 - 2x^3 + 8x^2 + 22x \\
\qquad\quad 3x^4 + 6x^3 + 3x^2 - 12x - 33 \\
\hline
5x^6 + 8x^5 + 4x^4 - 16x^3 - 44x^2 + 10x - 33. \quad Ans.
\end{array}
$$

It will be observed here that when the multiplicand and multiplier are arranged according to the descending powers of some letter, each partial product begins one place farther to the right than the preceding partial product, and that all terms of the partial products follow in regular order.

EXAMPLE 4.—Suppose the multiplier in the last example had been $x^2 - 2x + 3$; what would the product have been?

SOLUTION.—The work is shown herewith. This example has been selected

$$\begin{array}{l} x^4 + 2x^3 + x^2 - 4x - 11 \\ x^2 - 2x + 3 \\ \hline x^6 + 2x^5 + x^4 - 4x^3 - 11x^2 \\ \quad - 2x^5 - 4x^4 - 2x^3 + 8x^2 + 22x \\ \qquad\quad 3x^4 + 6x^3 + 3x^2 - 12x - 33 \\ \hline x^6 \qquad\qquad\qquad\qquad + 10x - 33. \quad Ans. \end{array}$$

to show how terms will sometimes disappear in multiplication, the product in this case being $x^6 + 10x - 33$, the terms containing x^5, x^4, x^3, and x^2 having disappeared.

19. To divide a polynomial by a monomial, arrange the polynomial according to the descending powers of one of the letters and divide each term separately by the divisor. Thus, to divide $21a^4b^2 - 12a^3b^3 + 24a^2b^4 - 33ab^5$ by $3ab^2$, arrange the work in exactly the same manner as for short division in arithmetic.

$$3ab^2)\overline{21a^4b^2 - 12a^3b^3 + 24a^2b^4 - 33ab^5}$$
$$7a^3 - 4a^2b + 8ab^2 - 11b^3. \quad Ans.$$

Beginning with the first term of the dividend and dividing it by $3ab^2$, the quotient is $7a^3$, which is the first term of the quotient sought. The other terms are found in the same way, the quotient being $7a^3 - 4a^2b + 8ab^2 - 11b^3$.

20. To divide a polynomial by a binomial or by a polynomial, arrange the dividend and divisor according to descending powers of one of the letters, placing them in the same relative positions as for long division in arithmetic. Divide the first term of the dividend by the first term of the divisor, and the result will be the first term of the quotient; multiply the divisor by the first term of the quotient and subtract the product from the dividend. Divide the first term of the remainder just found by the first term of the divisor, and the result will be the second term of the quotient, which multiply into the divisor and subtract the product from the remainder first found. Proceed in this manner until a remainder of 0 is obtained or until the first term of the last remainder is of *lower degree* than the first term of the divisor, in which case, write the remainder as the numerator of a fraction whose denominator is the divisor.

EXAMPLE 1.—Divide $a^3 - 2ab^2 + b^3$ by $a - b$.

SOLUTION.—Arranging the dividend and divisor according to the descending powers of a, place the divisor to the right of the dividend, with a curved line between, and draw a line under the divisor to separate it from the quotient. Then, $a^3 \div a = a^2$, the first term of the quotient. Multiplying the divisor by a^2 and subtracting the product from the dividend, the remainder is shown at (A), which is arranged according to descending powers of a. Then, $a^2b \div a = ab$, the second term of the quotient. Multiplying the divisor by ab and subtracting the product from the remainder (A), the new remainder is shown at (B). Then, $-ab^2 \div a = -b^2$, the third term of the quotient. Multiplying the divisor by $-b^2$ and subtracting the product from the remainder at (B), the difference is 0, showing that the division is exact. The quotient sought is $a^2 + ab - b^2$.

$$
\begin{array}{ll}
a^3 - 2ab^2 + b^3 & (a - b \\
\underline{a^3 - a^2b} & \qquad a^2 + ab - b^2. \quad Ans. \\
\quad a^2b - 2ab^2 + b^3 & (A) \\
\quad \underline{a^2b - ab^2} & \\
\qquad - ab^2 + b^3 & (B) \\
\qquad \underline{- ab^2 + b^3} & \\
\qquad\quad 0 \quad 0 & (C)
\end{array}
$$

EXAMPLE 2.—Divide $64x^5 - 486a^5$ by $2x - 3a$.

SOLUTION.—The work is shown below and requires no special explanation.

$$
\begin{array}{l}
64x^5 - 486a^5 \ (2x - 3a \\
\underline{64x^5 - \ 96ax^4} \qquad 32x^4 + 48ax^3 + 72a^2x^2 + 108a^3x + 162a^4. \quad Ans. \\
\qquad\quad 96ax^4 - 486a^5 \\
\qquad\quad \underline{96ax^4 - 144a^2x^3} \\
\qquad\qquad\quad 144a^2x^3 - 486a^5 \\
\qquad\qquad\quad \underline{144a^2x^3 - 216a^3x^2} \\
\qquad\qquad\qquad\quad 216a^3x^2 - 486a^5 \\
\qquad\qquad\qquad\quad \underline{216a^3x^2 - 324a^4x} \\
\qquad\qquad\qquad\qquad\quad 324a^4x - 486a^5 \\
\qquad\qquad\qquad\qquad\quad \underline{324a^4x - 486a^5}
\end{array}
$$

That the quotient as obtained is correct may be proved by multiplying it by the divisor; the product will be the dividend.

EXAMPLE 3.—Divide $9n^4 + 11cn^2 + 17c^2n$ by $3n^2 + 4c$.

SOLUTION.—To obtain the second term of the quotient, note that

$$
\begin{array}{ll}
9n^4 + 11cn^2 + 17c^2n & (3n^2 + 4c \\
\underline{9n^4 + 12cn^2} & \qquad 3n^2 - \tfrac{1}{3}c + \dfrac{c^2(51n + 4)}{9n^2 + 12c}. \quad Ans. \\
\quad - cn^2 + 17c^2n & \\
\quad \underline{- cn^2 - \tfrac{4}{3}c^2} & \\
\qquad \dfrac{17c^2n + \tfrac{4}{3}c^2}{3n^2 + 4c} = \dfrac{51c^2n + 4c^2}{9n^2 + 12c} = \dfrac{c^2(51n + 4)}{9n^2 + 12c} &
\end{array}
$$

$-cn^2 \div 3n^2 = -\frac{1}{3}c$. Note further that the exponent of n in the first term of the second remainder, $17c^2n$, is smaller than the exponent of n in the divisor; hence, the remainder is said to be of **lower degree** than the divisor, and the division ceases, the remainder being written as the numerator of a fraction whose denominator is the divisor. The numerator contains the fraction $\frac{4}{3}$; to get rid of it, multiply both numerator and denominator of the

entire fraction by 3 (as shown in arithmetic, this does not alter the value of the fraction), and the result is $\frac{51c^2n + 4c^2}{9n^2 + 12c}$. It is readily seen that $51c^2n + 4c^2 = c^2(51n + 4)$, since if the parenthesis be removed and the terms within it are multiplied by c^2, the product will be the binomial $51c^2n + 4c^2$. Therefore, the quotient is $3n^2 - \frac{1}{3}c + \frac{c^2(51n + 4)}{9n^2 + 12c}$.

21. Signs of Aggregation.—The signs of aggregation are used much more freely in connection with literal quantities than with numerical quantities, the reason being that numerical quantities can be readily combined to form a single number, which is not possible with literal quantities, unless the terms are alike. The rule given in arithmetic for removing the signs of aggregation applies to both numerical and literal quantities. Thus, $a + [b + (c - d)] = a + [b + c - d] = a + b + c - d$. Here, as in arithmetic, when one sign of aggregation includes another, the *inner* one is removed first. This is particularly advisable when some of the signs are negative. Thus, $a - [b - (c - d)] = a - [b - c + d] = a - b + c - d$.

EXAMPLE 1.—Remove the signs of aggregation from $2x - \{3y - [4x - (5y - 6x)]\}$.

SOLUTION.—$2x - \{3y - [4x - (5y - 6x)]\} = 2x - \{3y - [4x - 5y + 6x]\} = 2x - \{3y - [10x - 5y]\} = 2x - \{3y - 10x + 5y\} = 2x - \{8y - 10x\} = 2x - 8y + 10x = 12x - 8y$. First remove the parenthesis; since the quantities enclosed by it are subtracted from $4x$, their signs must be changed, thus making the expression within the brackets $4x - 5y + 6x$, which is equal to $10x - 5y$. Next remove the brackets, obtaining for the expression within the brace $3y - 10x + 5y$, which is equal to $8y - 10x$. Now removing the brace, the original expression has reduced to $2x - 8y + 10x$, which is equal to $12x - 8y$. *Ans.*

EXAMPLE 2.—Remove the signs of aggregation from

$$5m\{(a - b)[a^2 - 4b(a^2 - b^2)]\}$$

SOLUTION.—$5m\{(a - b)[a^2 - 4b(a^2 - b^2)]\} = 5m\{(a - b)[a^2 - 4a^2b + 4b^3]\} = 5m\{a^3 - 4a^3b + 4ab^3 - a^2b + 4a^2b^2 - 4b^4\} = 5ma^3 - 20ma^3b - 5ma^2b + 20ma^2b^2 + 20mab^3 - 20mb^4$. *Ans.* Having removed the parenthesis, the polynomial within the brackets is multiplied by the binomial, $a - b$, and the brackets are removed. Now removing the brace and multiplying the last product by $5m$, clears the expression of all the signs of aggregation.

22. When two or more terms of an expression have a common factor, the terms may be included in a parenthesis or other sign of aggregation and the common factor placed outside as a multiplier. For instance, the polynomial $x^2 + 2ax + a^2$ may be written $x(x + 2a) + a^2$ or $x^2 + a(2x + a)$, if desired. When the

first term within the parenthesis has the minus sign before it, as in $x^2 - 2ax + a^2 = x^2 + a(-2x + a)$, it is desirable to have the first term positive, and this may be done in the present case by changing the order of terms, writing the expression $x^2 + a(a - 2x)$. If, however, it is not desired to change the order of terms or if both terms are negative, *place the minus sign outside the parenthesis and change the signs of all the terms within it;* in such case, the last expression becomes $x^2 - a(2x - a)$. That this is correct will be clear when it is noted that the expression as it stands means that $a(2x - a)$ is to be subtracted from x^2, and in subtraction, the signs of the subtrahend are changed, thus making the expression $x^2 - 2ax + a^2$, the original form when the parenthesis is removed.

Suppose it were desired to divide $x^3 - x^2y + xy^2 - y^3$ by $x - y$. This may be done in the regular way, but a somewhat easier method in this case is the following: $x^3 - x^2y + xy^2 - y^3 = x^2(x - y) + y^2(x - y) = (x - y)(x^2 + y^2)$, and this last expression divided by $x - y$ gives $x^2 + y^2$ for the quotient. That $x^2(x - y) + y^2(x - y) = (x - y)(x^2 + y^2)$ is evident, because $x - y$ is a factor common to both terms, and if the parenthesis be removed from $(x^2 + y^2)$, the expression reduces to the preceding one.

If more than one of the signs of aggregation are used, the inner one is used first and the terms enclosed by it are treated as a single term when employing the next sign. For example, $3m^3 - 12m^2n - 6mn^2 - 18n^3 = 3m^3 - 12m^2n - 6n^2(m + 3n) = 3m^3 - 6n[2m^2 + n(m + 3n)] = 3\{m^3 - 2n[2m^2 + n(m + 3n)]\}$. Note that the signs of the terms within the parenthesis are not changed when the brackets are written, the entire expression, $n(m + 3n)$, being treated as though it were a single letter.

23. The Signs of a Fraction.—A fraction has **three** signs, one for the numerator, one for the denominator, and one for the entire fraction, the latter showing whether the fraction is to be added or subtracted. Thus, let a be the numerator and b the denominator, then the fraction may have one of the following forms: $+\frac{+a}{+b} = \frac{a}{b}$, $+\frac{-a}{+b} = -\frac{a}{b}$, $+\frac{+a}{-b} = -\frac{a}{b}$, $-\frac{+a}{+b} = -\frac{a}{b}$, $-\frac{-a}{+b} = \frac{a}{b}$, $-\frac{+a}{-b} = \frac{a}{b}$, $-\frac{-a}{-b} = -\frac{a}{b}$.

To prove that these results are correct, apply the law that if any quantity be multiplied and divided by the same number or

quantity its value is unchanged; thus, $3 \times -1 = -3$, and $-3 \div -1 = 3$. Now remembering that to divide a fraction, its numerator may be divided or its denominator multiplied by the divisor, $-1 \times \left(+\frac{-a}{+b}\right) \div -1 = -\frac{-a \div -1}{+b} = -\frac{a}{b}$; $-1 \times \left(+\frac{+a}{-b}\right) \div -1 = -\frac{+a}{-b \times -1} = -\frac{a}{b}$; $-1 \times \left(-\frac{-a}{+b}\right) \div -1 = +\frac{-a \div -1}{+b} = +\frac{a}{b} = \frac{a}{b}$; etc. Now since multiplying by -1 changes the sign of the fraction and dividing by -1 changes the sign of the numerator or denominator, as the case may be, it follows that *if two of the three signs of the fraction are changed, the value of the fraction is not altered; but, if one sign only or all three are changed, the value is altered.*

Suppose the fraction has the form $\frac{-3x - 11a}{x^2 - a^2}$; to make the sign before the first term of the numerator $+$, change the sign of each term of the numerator and the sign of the fraction, obtaining $-\frac{3x + 11a}{x^2 - a^2}$. The same result might have been obtained by changing the signs of both numerator and denominator, obtaining $\frac{3x + 11a}{a^2 - x^2}$, but this changes the order of the terms in the denominator, which is not usually desirable.

Similarly, $\frac{-\frac{c}{2} + 24c^2}{4n^2 + 7n - c} = \frac{-c + 48c^2}{8n^2 + 14n - 2c} = -\frac{c - 48c^2}{8n^2 + 14n - 2c}$. Here, to get rid of the fraction in the numerator, both numerator and denominator are multiplied by 2 (this does not alter the value of the fraction); then the sign before the fraction and the signs of the terms in the numerator are changed. If the signs of the numerator and denominator are changed, instead of the sign of the numerator and the sign of the fraction, the result will be $\frac{c - 48c^2}{-8n^2 - 14n + 2c} = \frac{c - 48c^2}{2c - 14n - 8n^2}$.

EXAMPLES

(1) Find the sum of $a^2 - b^3 + 3a^2b - 5ab^2$, $3a^2 + 3b^3 - 3ab^2 - 4a^2b$, $a^3 + b^3 + 3a^2b$, $2a^3 - 4b^3 - 5ab^2$, $6a^2b - 3a^3 + 10ab^2$, and $2b^3 - 7a^2b + 4ab^2$. *Ans.* $4a^2 + a^2b + ab^2 + b^3$.

(2) From $3m^3 - 2m^2 - m - 7$ subtract $2m^3 - 3m^2 + m + 1$. *Ans.* $m^3 + m^2 - 2m - 8$.

(3) Add $a^2 - 3ay + y^2 + a + y - 1$, $4ay - 2a + 2a^2 - 3y^2 - 2y + 3$, $3a^2 - 5ay - 4y^2 + 4y - 2$, and $5y^2 + 10ay + 6a^2 + y + a$.

Ans. $12a^2 + 6ay - y^2 + 4y$.

(4) Subtract $a - b - 2(c - d)$ from $2(a - b) - c + d$.

Ans. $a - b + c - d$.

(5) Subtract $a^2 + x^2 - ax$ from $3a^2 - 2ax + x^2$. *Ans.* $2a^2 - ax$.

(6) Multiply $2r^3 + 4r^2 + 8r + 16$ by $3r - 6$. *Ans.* $6r^4 - 96$.

(7) Multiply $4m^2 - 3mn - n^2$ by $3m - 2n$.

Ans. $12m^3 - 17m^2n + 3mn^2 + 2n^3$.

(8) Divide $a^6 - 6a^4 + a^2 + 4$ by $a^2 - 1$. *Ans.* $a^4 - 5a^2 - 4$.

(9) Divide $32s^5 + t^5$ by $2s + t$. *Ans.* $16s^4 - 8s^3t + 4s^2t^2 - 2st^3 + t^4$.

(10) Remove the signs of aggregation from

$$7a - \{3a - 2[4a - 3(5a - 2)]\}.$$

Ans. $12 - 18a$.

(11) Remove the signs of aggregation from

$$15 - 2y(x + y)(x - 2y) - 4y[2x - 3y(3 - x)]$$

Ans. $15 - 8xy + 36y^2 - 10xy^2 - 2x^2y + 4y^3$.

(12) Enclose within parenthesis the third and fourth terms, also the fifth and sixth terms, and then enclose all except the first term in brackets, of the expression $1 - 20n - 36mn + 12n^3 + 8m^2n + 8n^2$.

Ans. $1 - 4n[5 + 3(3m - n^2) - 2(m^2 + n)]$.

(13) Change the signs of the fraction $\frac{-7}{c+1}$ without changing its value.

Ans. $-\frac{7}{c+1}$.

(14) Change the signs of the fraction $\frac{-2a+8}{a^2-2a-4}$ without changing its value. *Ans.* $-\frac{2a-8}{a^2-2a-4}$ or, $\frac{2a-8}{4+2a-a^2}$.

EQUATIONS

24. An **equation** is an expression of equality between two sets of quantities; thus $4^3 = 64$, $(a + b)^2 = a^2 + 2ab + b^2$, and $a^2 + 3b = 2a - 7$ are equations. It will be noted that an equation consists of two parts, or *members*, which are separated by the sign of equality. The part on the *left* of the sign of equality is called the **first member,** and the part on the *right* is called the **second member.** In the first two equations given above, the second member is merely another way of writing the first member, the second member being obtained by performing the operations indicated in the first member. Equations of this kind are not true equations; they are called **identical equations.** The third equation is a true equation, and since the second member cannot be obtained by rewriting or performing any indicated operations in the first member, it is called an **independent equation.** Every formula such as was given in Art. **1,** is an independent equation.

It is to be noted that in every equation, the two members are exactly equal, in the same sense that $2 = 2$ or $3 + 4 = 7$. Bearing this in mind, the following law will at once be evident:

If the same quantity be added to or subtracted from both members, if both members be multiplied or both divided by the same quantity, or if both members be raised to the same power or the same root of both members be taken, the equality of the members is unaltered. For instance, take the identical equation $16 = 16$; adding 4 to both members, $16 + 4 = 16 + 4$, or $20 = 20$; if 4 be subtracted from both members, $16 - 4 = 16 - 4$, or $12 = 12$; if both members be multiplied by 4, $16 \times 4 = 16 \times 4$, or $64 = 64$; if both members be divided by 4, $16 \div 4 = 16 \div 4$, or $4 = 4$; if both members be squared, $16^2 = 16^2$, or $256 = 256$; finally, if the square root of both members be taken $\sqrt{16} = \sqrt{16}$, or $4 = 4$. What is true of an identical equation, insofar as the above law is concerned, is also true of any independent equation. For example, if $x^2 + 5x = 16$ and 4 be subtracted from both members, the equation becomes $x^2 + 5x - 4 = 16 - 4 = 12$; and if 16 be subtracted, the equation becomes $x^2 + 5x - 16 = 0$.

25. Transformation of Equations.—To transform an equation is to make alterations in the members without destroying their equality. This is done by applying the law of Art. **24.**

Case I.—A term may be transferred from one member to the other by changing its sign; this is called **transposition.** Consider the equation $40 - 6x - 16 = 120 - 14x$. Performing the operations indicated in the first member, $24 - 6x = 120 - 14x$; this operation is called **collecting terms.** *Transposing* the $14x$ to the first member and the 24 to the second member, $14x - 6x = 120 - 24$. Collecting terms, $8x = 96$. Dividing both members by 8, $x = 12$. To prove that $x = 12$, substitute 12 for x in the original equation; if the two members are then equal, 8 is the correct value for x. Thus, $40 - 6 \times 12 - 16 = 120 - 14 \times 12$, or $40 - 72 - 16 = 120 - 168$, whence, $-48 = -48$, and the equation is said to be **satisfied.**

To prove the rule for transposition, consider the second equation above, $24 - 6x = 120 - 14x$. If $14x$ be added to both members (which, by the law of equations, does not destroy the equality), the equation becomes $14x + 24 - 6x = 120 - 14x + 14x = 120$. Note that as the result of this operation, the term $14x$ has here been transferred (transposed) to the first member

and that its sign has been changed from $-$ to $+$. Subtracting 24 from both members of the equation $14x + 24 - 6x = 120$, the equation becomes, $14x + 24 - 24 - 6x = 120 - 24$, or $14x - 6x = 96$, from which, $8x = 96$. Note that as the result of this operation, the term 24 has been transposed to the second member and that its sign has been changed from $+$ to $-$. Evidently, therefore, a term may be transposed from one member to the other by changing its sign. Having reduced the equation to $8x = 96$, both members may be divided by 8 without destroying the equality, according to the law of equations.

Case II.—Find the value of x in $\frac{x}{2} - \frac{x}{3} + \frac{x}{5} = 44$. The first step is to clear the equation of fraction, which may be done by multiplying both members by each denominator in succession. Thus, multiplying first by 2, $x - \frac{2x}{3} + \frac{2x}{5} = 88$; multiplying by 3, $3x - 2x + \frac{6x}{5} = 264$; multiplying by 5, after first combining $3x$ and $-2x$, $5x + 6x = 1320$; dividing both members by 11, since $5x + 6x = 11x$, $x = 120$. Substituting this value of x in the original equation, $\frac{120}{2} - \frac{120}{3} + \frac{120}{5} = 44$; whence, $60 - 40 + 24 = 44$, and the equation is satisfied.

Multiplying by 2, 3, and 5 is the same as multiplying by $2 \times 3 \times 5 = 30$. Therefore, instead of multiplying by these numbers separately, both members of the original equation might have been multiplied by 30, and the result would have been $\frac{30 \times x}{2} - \frac{30 \times x}{3} + \frac{30 \times x}{5} = 30 \times 44$; whence, $15x - 10x + 6x = 1320$, or $11x = 1320$, and $x = \frac{1320}{11} = 120$.

Example.—Find the value of x in $\frac{x+3}{2} + \frac{x}{3} = 4 - \frac{x-5}{4}$.

Solution.—The product of the denominators is $2 \times 3 \times 4 = 24$. Multiplying both members by 24, $\frac{24(x+3)}{2} + \frac{24x}{3} = 96 + \frac{24(5-x)}{4}$, since $-\frac{x-5}{4} = +\frac{5-x}{4}$. Since all the numerators are now divisible by the denominators, perform the divisions, thus clearing the equation of fractions, and obtain $12(x + 3) + 8x = 96 + 6(5 - x)$, or $12x + 36 + 8x = 96 + 30 - 6x$. Transposing and collecting terms, $26x = 90$, or $x = \frac{90}{26} = 3\frac{6}{13}$. *Ans.*

26. The subject of transformation of equations is of great importance in connection with formulas. For instance, consider the formula,

$$p = \frac{.37wT}{v}.$$

Suppose that it is desired to find another formula giving the value of w. Multiplying both members of this equation by v, $pv = .37wT$, which may be written $.37Tw = pv$. Dividing both members by $.37T$,

$$w = \frac{pv}{.37T},$$

a formula that can be used to obtain the value of w.

As another example, transform the formula $t = .53L\sqrt{\frac{P}{S}}$ so it can be used to find the value of P. Dividing both members by $.53L$, the equation becomes $\frac{t}{.53L} = \sqrt{\frac{P}{S}}$; squaring both members $\frac{t^2}{.53^2L^2} = \frac{P}{S} = \frac{t^2}{.2809L^2} = \frac{3.56t^2}{L^2}$, since $\frac{1}{.2809} = 3.56 -$. Now multiplying both members by S,

$$P = \frac{3.56St^2}{L^2}.$$

A numerical factor may be transferred from the denominator to the numerator by multiplying the numerator by the reciprocal of the factor. Thus, let a be the factor and $\frac{m}{an}$ the fraction; then $\frac{m}{an} = \frac{\frac{1}{a} \times m}{\frac{1}{a} \times a \times n} = \frac{\frac{1}{a} \times m}{n}$. Since $\frac{1}{.2809} = 3.56$ very nearly, $\frac{t^2}{.2809L^2} = \frac{3.56t^2}{L^2}$. Or, $\frac{t^2}{.2809L^2} = \frac{1}{.2809} \times \frac{t^2}{L^2} = 3.56 \times \frac{t^2}{L^2} = \frac{3.56t^2}{L^2}$.

27. Prime Marks and Subscripts.—In certain formulas, it is desirable to use the same letter for different measurements or quantities of the same kind. The formula given in Art. **1** is an instance. Here the outside diameter was represented by D and the inside diameter by d. Instead of using a capital letter for one diameter and a lower case letter for the other, the outside diameter might have been represented by d' and the inside

diameter by d''. Had there been several other diameters used in the formula, they might be indicated by d''', d'''' or d^{IV}, d^{V}, etc. These marks are called *prime marks*, and they are read in connection with the letters as follows: *d prime, d second, d third, d fourth*, etc. In connection with printing, these marks are called *superior characters*.

When exponents are used in connection with letters affected with prime marks, the result is somewhat awkward (thus, d'^2, d''^2, d'''^3, etc.) and it is then customary to use what are called **subscripts** (in printing, called *inferior characters*), which are small figures of the same size as those used for exponents and placed slightly below and to the right of the letter; for example, d_1 (read *d sub-one*), d_2 (read *d sub-two*), d_3 (read *d sub-three*), etc. Exponents can be used with such letters very readily; thus, d_1^2, d_2^3, d_3^4, etc. Such expressions are read *d sub-one square, d sub-two cube, d sub-three fifth*, etc. Always remember that letters having different subscripts or prime marks are just as different and are operated on in the same way as though different letters had been used instead. For instance, $5d' + 8d'' - 2d' = 3d' + 8d''$.

28. Application of Formulas.—To apply a formula, substitute in the right-hand member the values of the letters and then perform the indicated operations.

EXAMPLE 1.—Given the formula $I = \left(r^2 - \frac{3rh}{4} + \frac{3h^2}{20}\right)\frac{2h}{3r - h}$, find the value of I when $r = 12.3$ and $h = 4.8$.

SOLUTION.—Substituting in the formula the values of r and h, $I = \left(12.3^2 - \frac{3 \times 12.3 \times 4.8}{4} + \frac{3 \times 4.8^2}{20}\right)\frac{2 \times 4.8}{3 \times 12.3 - 4.8} = (151.29 - 44.28 + 3.456) \times .29907 = 110.466 \times .29907 = 33.037$, very nearly. *Ans.*

EXAMPLE 2.—Given the formula $S = \frac{h(A' + 2\sqrt{A'A''} + 3A'')}{4(A' + \sqrt{A'A''} + A')}$, find S when $h = 14.5$, $A' = 40.84$, and $A'' = 30.63$.

SOLUTION.—Substituting in the formula the values given,

$$S = \frac{14.5(40.84 + 2\sqrt{40.84 \times 30.63} + 3 \times 30.63)}{4(40.84 + \sqrt{40.84 \times 30.63} + 30.63)}$$

$$= \frac{14.5(40.84 + 70.737 + 91.89)}{4(40.84 + 35.3685 + 30.63)} = \frac{14.5 \times 203.467}{4 \times 106.8385} = 6.9036 -. \quad \textit{Ans.}$$

EXAMPLE 3.—Given the formula $p = \frac{PK}{DN + K}$, to find D when $p = 56$, $P = 200$, $K = 700$, and $N = 150$.

SOLUTION.—First transform the equation so D will stand alone in the left-hand member. Multiplying both sides of the equation by $DN + K$,

$pND + pK = PK$; transposing the term pK to the second member, $pND = PK - pK$; Dividing both members by pN,

$$D = \frac{PK - pK}{pN} = \frac{K(P - p)}{pN}.$$

Now substituting in the formula for D the values of K, P, p, and N,

$$D = \frac{700(200 - 56)}{56 \times 150} = 12. \quad Ans.$$

EXAMPLES

(1) Find the value of x in the equation

$$13 - 5(3 + 4x) = 4x + 20 - 4(x + 20). \qquad Ans.\ x = 2.9.$$

(2) Find the value of x in the equation

$$\frac{x}{2} + \frac{2x}{3} + \frac{7x}{8} = 7\left(1 - \frac{x}{4}\right) + 35. \qquad Ans.\ x = 11\tfrac{1}{13}.$$

(3) Find the value of x in the equation

$$15a - 2ax + \frac{x}{3a} = 26 - 17ax. \qquad Ans.\ x = \frac{a(78 - 45a)}{1 + 45a^2}.$$

(4) When $w' = 3$, $w'' = 8.5$, $w''' = 3.6$, $s' = .0951$, $s'' = 1$, $s''' = .1138$ $t' = t'' = 60$, and $t''' = 840$, find the value of t in the formula.

$$t = \frac{w's't' + w''s''t'' + w'''s'''t'''}{w's' + w''s'' + w'''s'''} \qquad Ans.\ t = 94.753-.$$

(5) When $H = 178$, $T_a = 540$, and $T_c = 1210$, find p from the formula

$$p = H\left(\frac{7.6}{T_a} - \frac{7.9}{T_c}\right) \qquad Ans.\ p = 1.343.$$

(6) When $s = \frac{1}{2}(a + b + c)$, and $a = 24.5$, $b = 37.8$, $c = 43.3$, find r from the formula

$$r = \sqrt{\frac{(s - a)(s - b)(s - c)}{s}}. \qquad Ans.\ r = 8.7394+.$$

(7) Given the formula $c = \sqrt{2rh - h^2}$, find c when $r = 32\frac{3}{8}$ and $h = 11\frac{3}{4}$.

$$Ans.\ c = 24.955 -.$$

(8) Given $n = \dfrac{L}{\sqrt{\pi d^2 + t^2}}$, find n when $L = 1800$, $\pi = 3.1416$, $d = 8$, and $t = \dfrac{3}{32}$.

$$Ans.\ n = 126.94 -.$$

QUADRATIC EQUATIONS

29. To solve an equation is to find the value of the quantity represented by some particular letter; this quantity is called the **unknown quantity.** In the examples given in Art. **25,** the unknown quantity is x.

What is termed the **degree** of an equation is determined by the highest exponent of the unknown quantity. In the equations so far given, the highest exponent of the unknown quantity was 1;

hence, these equations are said to be of the **first degree.** An equation of the first degree is also called a **linear equation.**

When the highest exponent of the unknown quantity is 2, as in the equation $3x + 9x^2 - 12 = 7(2 + x^2)$, which reduces to $2x^2 + 3x = 26$ after the various transformations have been made, the equation is said to be of the **second degree.** An equation of the second degree is generally called a **quadratic equation.**

The majority of equations that occur in practice reduce by transformation to linear or quadratic equations. Any linear equation may be represented by

$$ax = b, \qquad (1)$$

in which a and b may have any numerical value, and may be positive or negative. If a be negative, it may be rendered positive by multiplying both sides of the equation by -1 or, what is the same thing, dividing both sides (*i.e.*, both members) by -1. Thus, $-ax = b$ divided by -1 becomes $ax = -b$.

Any quadratic equation will reduce to the form

$$ax^2 + bx = c, \qquad (2)$$

in which a, b, and c may have any numerical value, and may be positive or negative. If a be negative, it may be rendered positive by dividing both sides of the equation by -1. Thus, $-ax^2 + bx = -c$ divided by -1 becomes $ax^2 - bx = c$.

In equations (1) and (2), x is the unknown quantity whose value is to be found, and which may be represented by any letter whatever instead of x. For instance, the equation might be $n^2 + 8n = 33$; here n is the unknown quantity, $a = 1$, $b = 8$, and $c = 33$. In the equation $3s^2 - 13s = -14$, the unknown quantity is s, $a = 3$, $b = -13$, and $c = -14$.

30. It is sometimes convenient to use what is called the double sign which is written $\pm$ or $\mp$. The first character is read **plus or minus,** and the second character is read **minus or plus,** the name of the upper sign being pronounced first, both characters being a combination of the plus and minus signs. Either character really represents two signs and is treated as two signs, whence the name, double sign. Thus, $16 \pm 5 = 16 + 5 = 21$ or $16 - 5 = 11$.

Since $+a \times +a = +a^2$ and $-a \times -a = +a^2$, it follows that the square root of a^2 may be either $+a$ or $-a$; this fact is indicated by writing $\sqrt{a^2} = \pm a$, consequently, $7 + \sqrt{16} = 11$ and $7 - \sqrt{16} = 3$ may be represented by $7 \pm \sqrt{16} = 11$ or 3.

If the number whose square root is to be extracted is negative, the operation can only be indicated, since no negative number can be squared that will give a positive product. For this reason, such expressions as $\sqrt{-16}$, $\sqrt{-c}$, etc. are called **imaginary quantities.** Since the square root of a negative quantity is indicated by $\sqrt{-a}$, it follows that the square of an imaginary quantity is a negative quantity; thus, $(\sqrt{-a})^2 = -a$, $(\sqrt{-16})^2 = -16$, etc.

31. Roots of Equations.—Any value of the unknown quantity that satisfies the equation is called a **root** of the equation. An equation of the first degree, a linear equation, has but one root, while an equation of the second degree, a quadratic equation, has two roots.

To solve a linear equation, reduce it to the form $ax = b$; then, dividing both members by a, $x = \frac{b}{a}$, and the result thus obtained is the root of the equation.

To solve a quadratic equation, reduce it to the form

$$ax^2 + bx = c;$$

then substitute the values of a, b, and c, with their proper signs, in the formula

$$x = \frac{-b \pm \sqrt{b^2 + 4ac}}{2a}$$

This formula gives two values for the unknown quantity; that is, the equation has *two roots*.

To apply the formula, let the equation be $3s^2 - 13s = -14$. Substituting 3 for a, -13 for b, and -14 for c,

$$s = \frac{-(-13) \pm \sqrt{(-13)^2 + 4 \times 3 \times -14}}{2 \times 3}$$

$$= \frac{13 \pm \sqrt{169 - 168}}{6} = \frac{13 \pm 1}{6} = 2\tfrac{1}{3} \text{ or } 2.$$

If either of these values be substituted for s in the original equation, it will *satisfy* the equation. Thus, since $2\frac{1}{3} = \frac{7}{3}$, $3(\frac{7}{3})^2 - 13 \times \frac{7}{3} = \frac{49}{3} - \frac{91}{3} = -\frac{42}{3} = -14$, and $3 \times 2^2 - 13 \times 2 = 12 - 26 = -14$. Since the first member equals the second member in both cases, both of the values obtained for s are said to satisfy the equation, and the roots of the equation are $2\frac{1}{3}$ and 2.

The above formula giving the value of x is so important that it should be thoroughly committed to memory.

EXAMPLE 1.—Find the roots of the equation $2x - \frac{7}{x+5} = 5(21 - x)$.

SOLUTION.—Removing the parenthesis and transposing to the first member the term containing x,

$$7x - \frac{7}{x+5} = 105$$

Clearing of fractions, $7x^2 + 35x - 7 = 105x + 525$

Transposing and collecting terms,

$$7x^2 - 70x = 532$$

Dividing by 7, $x^2 - 10x = 76$

Substituting in the formula,

$$x = \frac{-(-10) \pm \sqrt{10^2 + 4 \times 1 \times 76}}{2 \times 1}$$

$$= \frac{10 \pm \sqrt{404}}{2} = \frac{10 \pm 20.1-}{2}$$

$$= 15.05 \text{ or } -5.05. \quad Ans.$$

Substituting 15.05 for x in the original equation, $2 \times 15.05 - \frac{7}{15.05+5} = 5(21 - 15.05)$. Performing the operations indicated, $29.75087+ = 29.75$, which agrees close enough for practical purposes. Substituting -5.05 for x, $2 \times -5.05 - \frac{7}{-5.05+5} = 5[21 - (-5.05)]$. Performing the operations indicated, $129.9 = 130.25$, which also agrees close enough for most practical purposes. In the first case, the difference between the two values was 00.00087, and in the second case, 000.35. If more accurate results are desired, the square root of 404 must be found to a greater number of decimal places. In almost every case, only the positive root is desired, and the value found is accurate enough.

EXAMPLE 2.—Find the value of x in $\frac{x}{3} - 4 - x^2 + 2x - \frac{4x^2}{5} = 45 - 3x^2 + 4x$.

SOLUTION.—Transposing the 4 to the right-hand member and the two terms containing x to the left-hand member,

$$\frac{x}{3} + 2x^2 - 2x - \frac{4x^2}{5} = 49 \qquad (1)$$

Clearing of fractions,

$$5x + 30x^2 - 30x - 12x^2 = 735$$

Collecting terms, $18x^2 - 25x = 735$

Substituting in the formula,

$$x = \frac{25 \pm \sqrt{25^2 + 4 \times 18 \times 735}}{2 \times 18}$$

$$= \frac{25 \pm 231.398-}{36}$$

$$= 7.1221+ \text{ or } -5.7333-. \quad Ans.$$

Substituting these values in equation (1), which is practically the same as the original equation, $\frac{7.1221}{3} + 2 \times 7.1221^2 - 2 \times 7.1221 - \frac{4 \times 7.1221^2}{5} = 49$; performing the indicated operations, $48.999 = 49$; difference $= 00.001$. Also, $\frac{-5.7333}{3} + 2(-5.7333)^2 - 2 \times -5.7333 - \frac{4(-5.7333)^2}{5} = 49$; performing the indicated operations, $49.0004 = 49$; difference $= 00.0004$. Both results are close enough for practical purposes.

It is always a good plan to substitute at least one of the roots for the unknown quantity in the original equation in order to make sure that no mistake has been made in the work.

EXAMPLES

Find the value of x in the following equations:

(1) $x^2 - 16x = -63$. *Ans.* $x = 9$ or 7.

(2) $3x^2 + 8x = 56$. *Ans.* $x = 3.1882+$ or $-5.8549-$.

(3) $7x^2 + 20x = 32$. *Ans.* $x = 1\frac{1}{7}$ or -4.

(4) $x^2 - \frac{2}{3}x = 1\frac{1}{4}$. *Ans.* $x = 1\frac{1}{2}$ or $-\frac{5}{6}$.

(5) $x^3 + (19 - x)^3 = 1843$. *Ans.* $x = 11$ or 8.

(6) $24.3x^2 - 65.28x = 427.486$. *Ans.* $x = 5.74732$ or -3.06091.

ACCURACY IN CALCULATION

32. Significant Figures.—The **significant figures** of a number are those figures which begin with the first digit and end with the last digit. For example, in the numbers 2304600 and .00023046, the significant figures are 23046. No attention is paid to the decimal point in connection with significant figures, and ciphers to the left of the first digit and to the right of the last digit are not considered. The **significant part** of a number is that part which is composed of its significant figures. In the numbers .005236, 52.36, and 5236000, the significant part is 5236, and these numbers all contain four significant figures.

In practice, before any formula can be used, it is usually necessary to make one or more measurements. Thus, before the formula in Art. **1** can be used, it is necessary to measure the length and the inside and outside diameters of the hollow cylinder. If, however, it is assumed that the inside diameter is, say, 8 in., that the weight is, say, 490 lb., and it is desired to find the outside diameter, it may be readily calculated as follows:

$W = .7854wl\,(D + d)\,(D - d) = .7854\,wl\,(D^2 - d^2)$, whence,

$$D = \sqrt{\frac{W}{.7854wl} + d^2} = \sqrt{\frac{490}{.7854 \times .2604 \times 30} + 8^2} = 11.9943-$$

in. In practice, this would probably be taken as 12 in., but in any case, a measurement would have to be made before this result could be applied.

What is true in the case just cited is also true in practically every case that occurs in the application of formulas; measurements of some kind—weight, length, area, or volume—must be made either before or after the formula is used.

33. Accuracy in Measurements.—In commercial transactions and in ordinary calculations pertaining to engineering matters, measurements are seldom accurate to more than three significant figures. A measurement is said to be correct to n significant figures when, if expressed to n figures, the figures following the nth figure being considered as a decimal, the difference between the two numbers is greater than $-.5$ and less than $+.5$. Thus, the number 3.141593 expressed to four significant figures is 3.142; expressed to three or five significant figures it is 3.14 or 3.1416. Regarding these several numbers as integers and subtracting the original number from them, $3142 - 3141.593 = +.407$, which is less than $+.5$; $314 - 314.1593 = -.1593$, which is greater than $-.5$; and $31416 - 31415.93 = +.07$, which is less than $+.5$. Hence, 3.141593 correct to 3, 4, or 5 significant figures is 3.14, 3.142, or 3.1416.

When a number is expressed to a certain number of significant figures, say n, and it is necessary to employ ciphers to make up the required number of n figures, then these ciphers are counted as significant figures. For instance, 4599.996 and 4600.003 when expressed to 6 significant figures are written 4600.00.

For any measurement to be correct to n significant figures, it is necessary to know that the figures to the right of the nth figure form a number that is greater than $-.5$ and less than $+.5$. Suppose that 4 tons of coal (8000 lb.) are bought. The purchaser will not object if there is a pound less and the dealer will not object if there is a pound more; in fact, a difference of 5 or possibly 10 pounds would not be noticed. To obtain 4 significant figures correct in this transaction would require that the amount of coal delivered be not less than 7999.5 lb. and not more than 8000.5 lb. But the consideration of half a pound of coal would be ridiculous in connection with a weight of this amount. To be correct to 3 significant figures, the coal delivered must be not less than 7995 lb. nor more than 8005 lb., and if the amount actually delivered came within these limits, the transaction would be considered quite accurate.

What is true of a heavy weight is also true of a light weight. Chemists have balances so accurate that when the proper precautions are taken, a thousandth of a grain may be weighed; but these balances are suitable for weighing only very small amounts, and a weight of even a tenth of a pound might injure them; possibly a hundredth of a pound would be the greatest amount it

would be safe to use. Since a pound contains 7000 grains, a hundredth of a pound contains 70 grains, or 70,000 thousandths of a grain, that is, 5 significant figures. To make certain that the fifth figure was correct, it would be necessary that the balances detect a variation of half a thousandth of a grain, which would be beyond the limit of any except very special instruments; therefore, the fifth figure could not ordinarily be determined, and the weighing would be correct to only four significant figures.

The same considerations govern any other kind of measurement, and the following law may therefore be laid down: *measurements may be considered sufficiently accurate for practical purposes if correct to* 3 *significant figures; very accurate, if correct to* 4 *significant figures; and extremely accurate, necessitating special methods and instruments, if correct to* 5 *or more significant figures.*

34. Accuracy in Numerical Operations.—Suppose it is desired to multiply 4343.944819 by 3.141593 and obtain the result correct to 5 significant figures. Using all the figures of both numbers, the work is shown at (*a*), and the product to 5 significant figures

(*a*)	(*b*)	(*c*)
4342.944819	4342.94 +	4′3′4′2.′9′4 +
3.141593	3.14159	3.14159
13028.834457	13028.82	13028.82
434 2944819	434 29 4	434 29
173 71779276	173 71 76	173 72
4 342944819	4 34 294	4 34
2 1714724095	2 17 1470	2 17
39086503371	39 08646	39
13028834457	13643.73 68746	13643.73
13643.765042756667		

is 13644−. Now limiting both multiplicand and multiplier to one more significant figure than is required in the product, in this case, 5 + 1 = 6 figures, the work is shown at (*b*), and the product to 5 significant figures is 13644 as before. Inspecting the work at (*b*), it will be observed that if a line be drawn as shown cutting off all figures to the right of the first partial product, the result is 13643.73, which becomes 13644 when reduced to 5 significant figures. Observe that in the multiplication, the left-hand digits of the multiplicand and multiplier are placed under each other and the first partial product is found by multiplying the multiplicand by the *first* figure of the multiplier. The second partial product is then written one place to the right of the first partial product; the

third partial product is written one place to the right of the second partial product; etc. This brings the partial products in the same relative positions insofar as the *order* of the figures of the product is concerned as would be the case if the multiplying were begun with the right-hand figure of the multiple.

The work at (*c*) is very much the same as at (*b*), except that as soon as the first partial product has been obtained, the right-hand figure of the multiplicand is cut off; it is considered, however, in multiplying, in order to ascertain how much to carry. In finding the second partial product, there is nothing to carry in this case because $1 \times 4+ = 4+$. Having found the second partial product, cut off another figure in the multiplicand; then, since $4 \times 9 = 36$, call it 40 and carry 4 to the next product, obtaining $4 \times 2 + 4 = 12$; write 2 and carry 1. Then, $4 \times 4 + 1 = 17$; write 7 and carry 1. $4 \times 3 + 1 = 13$; write 3 and carry 1. $4 \times 4 + 1 = 17$, which write. Now cut off another figure, and $1 \times 434 = 434$, which write. Cut off another figure, and since $5 \times 4 = 20$, carry 2. Then, $5 \times 3 + 2 = 17$; write 7 and carry 1. $5 \times 4 + 1 = 21$, which write. Finally, cut off one more figure, and $9 \times 3 = 27$, which call 30 and carry 3. Then $9 \times 4 + 3 = 39$, which write. It will be observed that the first figure obtained in each partial product is written directly under the last figure of the first partial product. Adding the partial products as they stand, the sum is 13643.73; or 13644 when reduced to 5 significant figures.

Now counting the number of figures at (*a*), it will be found that 109 figures were used; at (*b*), 64 figures were used; at (*c*), 44 figures were used. The result in all three cases is the same when the product is expressed to 5 significant figures. Not only is there a great saving in the number of figures employed, but there is very much less liability of making mistakes, and it is very much easier to check the work. In order, however, to perform the work as shown at (*c*), it is necessary to begin multiplying with the first (left-hand) figure of the multiplier.

As another example, find the product of 230.2585093 and 15.70796 to 5 significant figures. The work is shown in the margin. Instead of reducing the numbers to $5 + 1 = 6$ significant figures, they are written as they stand and the multiplicand is limited to 6 significant figures by cutting off the remaining figures. The first partial product is 2302.59, because the seventh figure is 5+. It is always best to locate the decimal point in

the first partial product. To locate it in this case, note that if the multiplier were 1.57+, the first partial product would be 230.259; but the multiplier is 10 times 1.57+, and the first partial product is therefore $10 \times 230.259 = 2302.59$. After multiplying by 9 and obtaining 21 for the fifth product, cut off one more figure of the multiplicand, and since $6 \times 2 = 12$, write 1 for the sixth partial product. This method of multiplying is slightly more accurate than that at (*c*) in the preceding example, when both factors were reduced to $5 + 1 = 6$ figures. The product correct to 5 significant figures is 3616.9. *Ans.*

```
2'3'0.'2'5'8'5093
15.70796
2302.59
1151 29
 161 18
   1 61
     21
      1
3616.89
```

35. Division may be performed in a somewhat similar manner. Thus, to find the quotient of 3616.89 ÷ 230.2585093 to 5 significant figures, arrange the work as shown in the margin. Limit the divisor to $5 + 1 = 6$ figures by cutting off all figures beyond the sixth, and then cut off another figure in the divisor every time another remainder is found. There will evidently be two integral places in the quotient, since 3616.890 ÷ 230.258+ = 15.7+. The quotient correct to 5 significant figures is 15.708.

```
3616.890('2'3'0.'2'5'8'5093
2302 59   15.70795−
1314 30
1151 29
 163 01
 161 18
   1 83
   1 61
     22
     21
      1
      1
```

As another example, find the quotient of 13643.765 ÷ 3.141593 to 5 significant figures. Limiting the divisor and dividend to 6 figures each, the dividend will not contain the divisor; hence, instead of cutting off another figure from the divisor, *add* another figure to the dividend, and then proceed with the division as shown. The quotient evidently contains 4 integral places, since the quotient of 13643 ÷ 3 will contain 4 integral places. The quotient correct to 5 significant figures is 4342.9. *Ans.*

```
13643.7'6'5(3.'1'4'1'5'9'3
12566 37    4342.94+
 1077 39
  942 48
  134 91
  125 66
    9 25
    6 28
    2 97
    2 83
      14
      12
       2
```

36. Constants and Variables.—A large majority of the formulas used in practice contain one or more quantities that remain the same no matter what the conditions are that govern the problem. For instance, the formula in Art. **1** contains the quantity .7854. Now, no matter what the values of D, d, l, and w are, the quantity .7854 remains the same; for this reason, it is called a **constant.** The other quantities in this formula are called **variables,** because their values vary or change for different cylinders. For all cast-iron cylinders, $w = .2604$, and, hence, for all cast-iron cylinders, w is also a constant, its value being .2604.

It has been shown that for multiplication and division, the numbers used may be limited to one more figure than the number of significant figures required in the result without loss of accuracy. What is true in this respect of multiplication and division is also true of addition, subtraction, powers, and roots. Consequently, in all practical applications of formulas, the number of significant figures used in all the quantities contained in the formulas may be limited to one more than is contained in the constant having the smallest number of significant figures, and the result should be limited to the same number of significant figures as this constant contains. For example, the formula $A = \dfrac{22.5G}{P + 8.62}$ contains two constants, both having 3 significant figures; hence, the values of G and P may be limited to $3 + 1 = 4$ significant figures, and the result when found should be expressed to 3 significant figures. The formula $d = 1.54aD + 2.6$ contains two constants, one of which contains but two significant figures; hence, the values of a and D may be limited to 3 significant figures and the value of d when found should be limited to 2 significant figures.

37. In the examples that follow, unless for some reason a special exception is made, all applications of formulas will be made under the assumption that all the quantities, both constants and variables, have been limited to one more significant figure than the number of significant figures contained in the constant having the least number of significant figures; if there are no constants, then all quantities should ordinarily be limited to 5 significant figures, and the results will be expressed to 4 significant figures.

EXAMPLE.—In the formula $s = \dfrac{Wl^3}{48EI}$, suppose that W = 1200 pounds, $l = 108$ inches, $E = 1{,}500{,}000$ pounds, and $I = \dfrac{bd^3}{12}$, in which $b = 3$ inches and $d = 8$ inches; find the value of s.

SOLUTION.—In this formula, the constants 48 and 12 are exact, and are therefore correct to any number of significant figures; the number 1,500,000 is correct to only 2 significant figures, and it is doubtful even if the second figure is correct. Consequently, it is useless to employ more than 3 significant figures in the calculation.

First calculate the value of I, obtaining $I = \frac{3 \times 8^3}{12} = 128$. Substituting this value of I and the other values given in the above formula,

$$s = \frac{\overset{1}{\cancel{100}}}{\underset{4}{\cancel{48}} \times \underset{15000}{\cancel{1500000}} \times 128} = \frac{\overset{9}{\cancel{108}} \times \overset{27}{\cancel{108}} \times \overset{27}{\cancel{108}}}{\underset{20000}{\cancel{60000}} \times \underset{\substack{8\\2}}{\cancel{32}}} = \frac{6561}{40000} = .164, \text{ say } .16. \qquad \textit{Ans.}$$

The formula just given gives the value of s in inches, s being the deflection of a beam having a certain shape and under certain conditions of loading, etc. Therefore, the deflection in this case would be taken as .16 inch, and this value is as close as can be obtained, although it might be a trifle more or a trifle less. Note that instead of cubing the number 108, the cube was expressed as the product of three factors, in order to employ cancelation.

APPROXIMATE METHOD FOR FINDING ROOTS

38. Cube and Fifth Roots of Numbers.—In certain formulas used in engineering, it is sometimes necessary to extract the cube root or, less frequently, the fifth root of a number. These roots may be found by an extension of the method explained in *Arithmetic* for finding the square root; but it entails a great amount of labor, and for practical purposes an approximate method answers the purpose equally well and is much easier to apply. Of the many approximate methods that have been recommended, the following is, perhaps, the simplest and most accurate. It was discovered by Charles Hutton, a famous English mathematician.

Let n = the number whose root is to be found; let r = the index of the root, and let a be a number a little greater or a little less than the exact value of the root, so that a^r is a little greater or a little less than n. Then,

$$\sqrt[r]{n} = \left[\frac{(r+1)n + (r-1)a^r}{(r-1)n + (r+1)a^r}\right]a, \text{ nearly.} \qquad (1)$$

For cube root, $r = 3$, and formula (1) reduces to

$$\sqrt[3]{n} = \left(\frac{2n + a^3}{n + 2a^3}\right)a \qquad (2)$$

For fifth root, $r = 5$, and formula (1) reduces to

$$\sqrt[5]{n} = \left(\frac{3n + 2a^5}{2n + 3a^5}\right) a \qquad (3)$$

The more nearly a^r approaches in value to n the more accurate will be the value obtained for the root. In order to save labor in finding a, the following table has been calculated; it gives the cubes and fifth powers of 1.1, 1.2, 1.3, etc. up to 9.9, and is used as described below.

Suppose it is desired to find the cube root of 34,586. The first step is to point off the number into periods of 3 figures each, 3 being the index, beginning with the decimal point and going to the right and left. If the number contains an integral part, point off that part only; but if it is a pure decimal, point it off to the right. Thus, the above number, when pointed off, becomes 34′586. If it had been .034586, it would become .034′586 when pointed off.

The next step is to move the decimal point so that it will follow the first period that contains a digit, and the given number then becomes 34.586. The given number, after shifting the decimal point will be called the **altered number.** Of course, if the integral part of the given number contains not more than 3 figures, it is not necessary to shift the decimal point.

Now referring to the table, and looking in the column headed n^3, the number 34.586 is found to lie between $32.768 = 3.2^3$ and $35.937 = 3.3^3$; the cube root of 34.586 therefore lies between 3.2 and 3.3, and one of these two numbers is to be selected for a in applying formula (2). To decide which one, find which of the two cubes just mentioned is nearest in value to the altered number. The easiest way to do this is to add the two numbers and divide the sum by 2 (this is the arithmetical mean of the two numbers). If the altered number is less than the arithmetical mean, use the smaller number, but if it is larger, or if it is near the arithmetical mean in value, use the larger number. In the present case, $(32.768 + 35.937) \div 2 = 34.3525$; hence, use the larger number. Then $a = 3.3$ and $a^3 = 35.937$. The work of applying the formula is shown in the margin. After performing the division, the quotient is

34.586	35.937
2	2
69.172	71.874
35.937	34.586
105.109	(106.460
95 814	.98731
9 2950	3.3
8 5168	2.96193
7782	296193
7452	3.258123
330	
319	
11	

CUBES AND FIFTH POWERS

n	n^3	n^5	n	n^3	n^5
1.0	1.000	1.00000	5.5	166.375	5032.84375
1.1	1.331	1.61051	5.6	175.616	5507.31776
1.2	1.728	2.48832	5.7	185.193	6016.92057
1.3	2.197	3.71293	5.8	195.112	6563.56768
1.4	2.744	5.37824	5.9	205.379	7149.24299
1.5	3.375	7.59375	6.0	216.000	7776.00000
1.6	4.096	10.48576	6.1	226.981	8445.96301
1.7	4.913	14.19857	6.2	238.328	9161.32832
1.8	5.832	18.89568	6.3	250.047	9924.35643
1.9	6.859	24.76099	6.4	262.144	10737.41824
2.0	8.000	32.00000	6.5	274.625	11602.90625
2.1	9.261	40.84101	6.6	287.496	12523.32576
2.2	10.648	51.53632	6.7	300.763	13501.25107
2.3	12.167	64.36343	6.8	314.432	14539.33568
2.4	13.824	79.62624	6.9	328.509	15640.31349
2.5	15.625	97.65625	7.0	343.000	16807.00000
2.6	17.576	118.81376	7.1	367.911	18042.29351
2.7	19.683	143.48907	7.2	373.248	19349.17632
2.8	21.952	172.10368	7.3	389.017	20730.71593
2.9	24.389	205.11149	7.4	405.224	22190.06624
3.0	27.000	243.00000	7.5	421.875	23730.46875
3.1	29.791	286.29151	7.6	438.976	25355.25376
3.2	32.768	335.54432	7.7	456.533	27067.84157
3.3	35.937	391.35393	7.8	474.552	28871.74368
3.4	39.304	454.35424	7.9	493.039	30770.56399
3.5	42.875	525.21875	8.0	512.000	32768.00000
3.6	46.656	604.66176	8.1	531.441	34867.84401
3.7	50.653	693.43957	8.2	551.368	37073.98432
3.8	54.872	792.35168	8.3	571.787	39390.40643
3.9	59.319	902.24199	8.4	592.704	41821.19424
4.0	64.000	1024.00000	8.5	614.125	44370.53125
4.1	68.921	1158.56201	8.6	636.056	47042.70176
4.2	74.088	1306.91232	8.7	658.503	49842.09207
4.3	79.507	1470.08443	8.8	681.472	52773.19168
4.4	85.184	1649.16224	8.9	704.969	55840.59449
4.5	91.125	1845.28125	9.0	729.000	59049.00000
4.6	97.336	2059.62976	9.1	753.571	62403.21451
4.7	103.823	2293.45007	9.2	778.688	65908.15232
4.8	110.592	2548.03968	9.3	804.357	69568.83693
4.9	117.649	2824.75249	9.4	830.584	73390.40224
5.0	125.000	3125.00000	9.5	857.375	77378.09375
5.1	132.651	3450.25251	9.6	884.736	81537.26976
5.2	140.608	3802.04032	9.7	912.673	85873.40257
5.3	148.877	4181.95493	9.8	941.192	90392.07968
5.4	157.464	4591.65024	9.9	970.299	95099.00499
5.5	166.375	5032.84375	10.0	1000.000	100000.00000

multiplied by $a = 3.3$, and the product is the cube root of 34.586, approximately. Since the decimal point was shifted one *period* to the *left* to form the altered number, it must be shifted one *place* to the right in the root, and $\sqrt[3]{34{,}586} = 32.58123$, approximately. The root to 8 significant figures is 32.581178; therefore, the root as found by the formula was correct to six significant figures.

38. The root when calculated as just described will always be correct to at least five significant figures, except when the altered number is less than $1.331 = 1.1^3$ and is nearly equal to the arithmetical mean of 1 and 1.331. This case will be discussed in Art. **39.**

If for any reason, more figures are desired than can be obtained by proceeding as above, express the root as found to 3 or 4 significant figures, and substitute it for a in this formula. Thus, in the preceding example, the root to 4 figures is 32.58; substituting this for a in formula (2), $\sqrt[3]{34{,}586} = \left(\frac{2 \times 34586 + 32.58^3}{34586 + 2 \times 32.58^3}\right) 32.58$ $= 32.581177737944-$; the root correct to 14 significant figures is $32.581177737942-$; hence, the root as calculated was correct to 13 significant figures.

The reason for shifting the decimal point to get the altered number is obvious—to make it easier to use the table. Since $\sqrt[3]{34586} = \sqrt[3]{1000 \times 34.586} = 10\sqrt[3]{34.586}$, the decimal point must be moved one place to the right after the root of the altered number has been found. Similarly, $\sqrt[3]{.034586} = \sqrt[3]{\frac{34.586}{1000}}$ $= \frac{1}{10}\sqrt[3]{34.586}$; consequently, if the decimal point is shifted one period to the *right* to form the altered number, it must be shifted one place to the *left* in the root.

39. When the altered number is less than 1.2, the fifth figure of the root as calculated by the foregoing method will usually be incorrect. In such cases, proceed as follows: Suppose the cube root of .001166 be desired. Pointing off, the result is .001′166. Shifting the decimal point one period to the right, the altered number is 1.166, which is less than 1.2. Now divide the decimal part by the index of the root, and the quotient is $.166 \div 3 = .055+$, which is nearly equal to the decimal part of the cube root of 1.166, the integral part being 1; that is, $\sqrt[3]{1.166} = 1.055$, nearly. Substituting this value for a in formula (2),

$$\sqrt[3]{1.166} = \left(\frac{2 \times 1.166 + 1.055^3}{1.166 + 2 \times 1.055^3}\right) 1.055 = .997655025 \times 1.055 = 1.052526051.$$

The root correct to 12 significant figures is 1.05252604197. Hence, $\sqrt[3]{.001166} = .1052526+$, by the formula.

40. The fifth root of a number is found in exactly the same manner, using formula (3). The only difference in the process is that the number must be pointed off into periods of *five* figures each, because the index of the root is 5. As an example, find the fifth root of 214.83. Here the integral part of the number contains only 3 figures, and it is not necessary to point off the number. Referring to the table, the given number falls between $2.9^5 = 205.11149$ and $3.0^5 = 243$; the arithmetical mean of these two numbers is 224.055745, and as this is greater than the given number, use 2.9 for a in formula (3). Substituting in the formula,

$$\sqrt[5]{214.83} = \left(\frac{3 \times 214.83 + 2 \times 205.11149}{2 \times 214.83 + 3 \times 205.11149}\right) 2.9 = 2.92697+.$$

Ans.

214.83	214.83	
3	2	
644.49	429.66	
205.11149	205.11149	
2	3	
410.22298	615.33447	
644.49	429.66	
1054.71298	1044.99447	
1044 99447	1.00930006	
9 71851	2.9	
9 40495	2.01860012	
31356	908370054	
31350	2.926970174	
6		

The whole calculation is shown in the margin. It was really not necessary to use so many decimal places, but since but very little labor would be saved by using a smaller number, it was not considered worth while to abbreviate the process further. In general, however, only one more significant figure would be used than was desired in the root.

As in the case of cube root, the method will give at least five significant figures correct, except when the altered number lies between $1^5 = 1$ and $1.1^5 = 1.61051$ and is near the arithmetical mean of these two numbers. In such cases, proceed as described in connection with cube root, dividing the decimal part of the altered number by the index, in this case 5, to find the decimal part of the root. For example, find the fifth root of 1.308375. Here $.308375 \div 5 = .061675$, and $\sqrt[5]{1.308375} = 1.06$ nearly. Substituting 1.06 for a in formula (3),

$$\sqrt[5]{1.308375} = \left(\frac{3\times1.308375+2\times1.06^5}{2\times1.308375+3\times1.06^5}\right) 1.06 = 1.055197-, \text{ say } 1.0552. \quad \textit{Ans.}$$

The root correct to 9 significant figures is 1.05522833. If more figures of the root are desired, substitute 1.055 for a.

41. The fourth root is very seldom required. In case it should be necessary to find the fourth root, all that need be done is to extract the square root and then extract the square root of the result; in other words, $\sqrt[4]{n} = \sqrt{\sqrt{n}}$. For instance, $\sqrt[4]{97.34} = \sqrt{\sqrt{97.34}} = \sqrt{9.8661} = 3.1410+$. Here the square root of $97.34 = 9.86610+$, and the square root of $9.8661 = 3.1410+$.

42. If the table of cubes and fifth powers is not available, find the first figure of the root by trial; then substitute this value for a in formula (2) or (3) and calculate the root to three figures, calling the result b. Express b to two figures, and substitute it for a in formula (2) or (3); the remainder of the work is the same as before, the value of a being calculated instead of being taken from the table.

Referring to the example of Art **37,** the altered number is 34.586. To find the first figure of the root, note that $3^3 = 27$ and $4^3 = 64$; the mean of these two powers is $\frac{27 + 64}{2} = 45.5$; hence, use 3 for the first figure of the root. Then, $a = 3$ and $a^3 = 3^3 = 27$, and

$$\sqrt[3]{34.586} = \left(\frac{2 \times 34.586 + 27}{34.586 + 2 \times 27}\right) = 3.26- = a.$$

Expressing this root to two figures, $b = 3.3$. Substituting this value of b for a. in the formula, $3.3^3 = 35.937$, and

$$\sqrt[3]{34.586} = \left(\frac{2 \times 34.586 + 35.937}{34.586 + 2 \times 35.937}\right) 3.3 = 3.25812+$$

It will be observed that insofar as the first five significant figures are concerned, either 3.2 or 3.3 may be substituted for a in the formula; but 3.3 is a slightly better value in this case, since it gives the root correct to 6 figures, while 3.2 gives only 5 figures correct.

The same procedure will be followed in the case of fifth roots; thus, referring to Art. **40,** the altered number is 214.83. Here $3^5 = 243$ and $2^5 = 32$; obviously, 3 is the proper number to substitute for a in formula (3), and

$$\sqrt[5]{214.83} = \left(\frac{3 \times 214.83 + 2 \times 243}{2 \times 214.83 + 3 \times 243}\right) 3 = 2.93- = b.$$

Expressing b to two figures, the root is 2.9, which is the same as the value of a used in Art. **40.**

This method may be applied to the special cases of Arts. **39** and **40.** Thus, to find the value of $\sqrt[3]{1.166}$, the first figure of the root is obviously 1, and $\left(\frac{2 \times 1.166 + 1}{1.166 + 2 \times 1}\right) 1 = 1.0524$. Now when the altered number does not differ greatly from a^3, the value of b may be calculated to 4 or 5 significant figures, and b may be expressed to 3 or even 4 figures, if desired, before substituting for a in the formula; but, unless great accuracy is desired, it is best to express b to 3 figures, to save labor in calculation. In the present case, substitute 1.05 for a in the formula.

Similarly, in Art. **40,** the altered number is 1.308375, and the first figure of the root is 1. Hence,

$$\sqrt[5]{1.308375} = \left(\frac{3 \times 1.308375 + 2 \times 1}{2 \times 1.308375 + 3 \times 1}\right) 1 = 1.0549.$$

In this case, 1.05 or 1.055 may be substituted for a.

If desired, this method may be used for finding the square root of numbers instead of employing the exact method described in *Arithmetic.* For square root, $r = 2$, and formula (1) of Art. **36** becomes

$$\sqrt{n} = \left(\frac{3n + a^2}{n + 3a^2}\right) a$$

As an example, find the square root of 3.1416. Here a is evidently 2, and $\left(\frac{3 \times 3.1416 + 4}{3.1416 + 3 \times 4}\right) \times 2 = 1.773+$. Using the first three figures for a, $\sqrt{3.1416} = \frac{3 \times 3.1416 + 1.77^2}{3.1416 + 3 \times 1.77^2} \times 1.77 = 1.77245594-$. By the exact method, the root to 9 significant figures is 1.77245592; hence, the root as found by the formula was correct to 8 significant figures.

The exact method is so easy to apply, that the reader is advised to use it in preference to the formula.

EXAMPLES

Calculate the roots in the following examples to 5 significant figures:

(1) $\sqrt[3]{.04608.}$ *Ans.* .35851+.

(2) $\sqrt[5]{.86402.}$ *Ans.* .97119+.

(3) $\sqrt[3]{1.0947.}$ *Ans.* 1.0306+.

(4) $\sqrt[3]{324,096,815.}$ *Ans.* 686.90−.

(5) $\sqrt[5]{4,063,972.}$ *Ans.* 20.979+.

(6) $\sqrt[3]{3.1416.}$ *Ans.* 1.4646−.

ELEMENTARY APPLIED MATHEMATICS

(PART 1)

EXAMINATION QUESTIONS

(1) Explain the difference between a coefficient and an exponent. (*b*) What is meant by the reciprocal of a number or quantity? (*c*) What is the reciprocal of $a - \frac{2}{c}$? *Ans.* $\frac{c}{ac - 2}$.

(2) Add $a - b$, $b - c$, $c - d$, and $d - c$. Let $a = 20$, $b = 16$, $c = 11$, and $d = 8$ and prove the result obtained was correct.

Ans. $a - c$.

(3) Find the sum of: $a^4 - 3ax^2 - 3az^2 + x^2z^2 + z^4$, $3ax^2 - 4a^3 + 2xz^2 + 6az^2 - x^4$, $3a^3 + 2a^2z^2 - 2x^2z^2 + 3a^3z - 5az^2$, $4x^4 - 6a^2x - 3a^4 - 3z^4 + x^2z^2$.

Ans. $3x^4 - 6a^2x + 2xz^2 + 3a^3z + 2a^2z^2 - 2az^2 - a^3 - 2a^4 - 2z^4$.

(4) Subtract $\frac{3}{2}a + 36 + \frac{1}{4}x + \frac{1}{2}ax$ from $\frac{5}{2}a - 76 - 3ax + \frac{1}{2}x$.

Ans. $a + \frac{1}{4}x - \frac{7}{2}ax - 112$.

(5) Multiply $a^5 - 10a^4b + 40a^3b^2 - 80a^2b^3 + 80ab^4 - 32b^5$ by $a - 2b$.

Ans. $a^6 - 12a^5b + 60a^4b^2 - 160a^3b^3 + 240a^2b^4 - 192ab^5 + 64b^6$.

(6) By performing the indicated operations, reduce the following expression to a simpler form:

$a^2(3a - 5x) - (2a - x)^2(a - 2x) + (a^2 + ax + x^2)(a - x) - x^3$.

Ans. $ax(7a - 9x)$.

(7) Divide $x^4 - 4x^3 - 51x^2 - 6x + 120$ by $x + 5$.

Ans. $x^3 - 9x^2 - 6x + 24$.

(8) Change the signs of the fraction $\frac{3 - 11x}{5x^2 + 6x - 9}$ without changing the value of the fraction. *Ans.* $\frac{3 - 11x}{9 - 6x - 5x^2}$.

(9) Given the formula $v = v_0 - \frac{1}{2}at^2$, rewrite it so it will express (*a*) the value of a, and (*b*) the value of t.

Ans. $\begin{cases} a = \dfrac{2(v_0 - v)}{t^2} \\ t = \sqrt{\dfrac{2(v_0 - v)}{a}} \end{cases}$

(10) Given the formula

$$v = \frac{23 + \frac{1}{n} + \frac{.00155}{s}}{.5521\left(23 + \frac{.00155}{s}\right)\frac{n}{r}} r\sqrt{s},$$

find the value of v when $n = .013$, $s = .005$, and $r = .559$.

Ans. $v = 3.6+$.

(11) Remove the signs of aggregation from

$$(27 - 4x)[40 - 5(3x + 7)] + 6\{24 - (x + 2)(x - 4)[3 - 5x(4 + x)]\}$$

Ans. $30x^4 + 60x^3 - 438x^2 - 1349x + 423$.

(11) Divide $40x^6 - 70x^5 + 4x^4 + 724x^3 + 88x^2 - 1080x - 3390$ by $5x^2 - 20x + 48$.

Ans. $8x^4 + 18x^3 - 4x^2 - 44x - 120 - \dfrac{1368x - 2370}{5x^2 - 20x + 48}$.

(12) Find the value of y in the equation.

$$3y + \frac{4y}{5} - \frac{y}{2} = 8\left(\frac{6y}{9} - y + 3\right)$$

Ans. $y = 4.0223+$.

(13) Find the two values of x in the equation $11x^2 - 35x = 40$.

Ans. $x = 4.0743+$ or $-.89251-$.

(14) What is the cube root of 705.33? *Ans.* 8.9015+.

(15) What is the fifth root of .76054? *Ans.* .94673−.

(16) What is the value of $\sqrt{26.25^2 + 17.5^2}$? *Ans.* 31.559+.

ELEMENTARY APPLIED MATHEMATICS

(PART II)

MENSURATION OF PLANE FIGURES

DEFINITIONS

43. Mensuration deals with the measurement of the length of lines, the area of surfaces, and the volume of solids; its principles and rules are used in every occupation and industry. The subject is, therefore, of the greatest importance.

Every material object occupies space in three directions—in *length*, in *breadth* or *width*, and in *thickness* or *depth*. Every magnitude or body is consequently said to have three dimensions —**length, breadth,** and **thickness.**

44. A **mathematical line** indicates direction only; it has only one dimension, length, and has no breadth or thickness. Such a line could not be seen; hence, every visible line, no matter how fine it may be, has breadth, but when considered in connection with problems relating to mensuration, the breadth of all lines is disregarded and they are conceived as having only length.

45. A **straight line** is one that extends continuously in one unvarying direction. In mathematics, straight lines are assumed to be infinite in length; that is they are assumed to be capable of being extended in either direction without limit. Fig. 3 shows a straight line, and it is assumed that it can be extended to the right or to the left as far as is desired—one foot, a mile, a hundred thousand million miles or farther—without any change in its direction. In practice, only short parts, called **segments,** of straight lines are considered; and to distinguish one line from another, letters or figures are placed at the ends of the segments. Thus, in Fig. 3,

FIG. 3.

the line there shown is called the line AB, when it is considered as extending from A to B, or the line BA, when it is considered as extending from B to A. In mathematics, a straight line is called a **right line**, and will usually be so designated hereafter.

Another definition of a right line is: a right line is the shortest path between two points. This definition is obvious, since if the path deviates, even in the slightest degree, from a point to another point, the path (line) will be *longer* than if it extended straight from one point to the other.

46. A **broken line** is one that is made up of two or more right line segments; see Fig. 4. A broken line is distinguished by placing a letter (or figure) at the ends of each segment. Thus, the broken line in Fig. 4 is called the line *abcdef*.

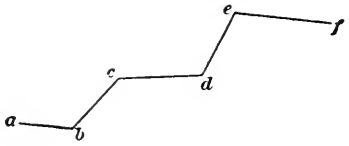

FIG. 4.

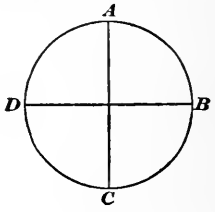

FIG. 5.

47. A curved line or curve is one that has no right line segment; its direction changes continually throughout its entire length. See Fig. 5. A curve may be finite (limited) in length or infinite (unlimited) in length, but in either case, no part of it is ever straight. An example of a finite curve is a circle, Fig. 5, and an example of an infinite curve is a parabola, see (*a*),

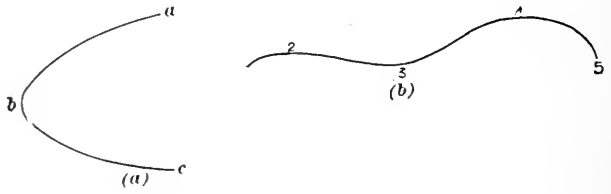

FIG. 6.

Fig. 6. When only a portion of a curve is considered, it is called an **arc**, the word arc meaning *bow*, alluding to its shape.

Curves are distinguished by placing letters at the ends of the arc and at such other points between as may be deemed advisable. Thus, in Fig. 5, the circle may be designated as $ABCD$; in (*a*),

Fig. 6, the curve may be called *abc*; in (*b*), Fig. 6, the curve may be referred to as 12345.

48. When two lines cross or cut each other, they are said to **intersect,** and the place where they intersect is called the **point of intersection.** Thus, in Fig. 4, *b*, *c*, *d*, and *e* are points of intersection of the lines *ab* and *cb*, of *bc* and *dc*, etc., assuming that these segments of right lines are prolonged (produced); in Fig. 5, the points *A*, *B*, *C*, and *D* are the points of intersection of the right lines *AC* and *DB* with the circle.

49. In mathematics, a point indicates position only; it has no dimensions. In practice, a point resembles a very small circle—more properly, a square—but is always considered to be without dimension. A point may always be conceived as being the point of intersection of two lines.

50. Parallel lines are right lines that are always the same distance from each other; they never intersect no matter to what length they may be produced. Thus, in Fig. 7, the right lines *AB* and *CD* are parallel.

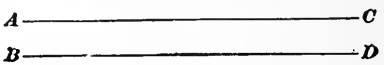

Fig. 7.

51. An **angle** is the difference in direction between two right lines that intersect. The point of intersection is called the **vertex** of the angle, and the lines are called the **sides.** Angles are designated by placing a letter at the vertex and by two other letters, one on each line. In Fig. 8, the right lines *AC* and *DB*, intersecting in the point *O*, form four angles, designated as *AOB*, *BOC*, *COD*, and *DOA*. Two angles on the same side of a line (which forms one of their sides) and separated by a common side are called **adjacent angles.** In Fig. 8, *AOB* and *AOD* are adjacent angles; *AOB* and *BOC* are also adjacent angles; etc. Note that adjacent angles have a common vertex, a common side, and the other side of both angles lies in the same right line.

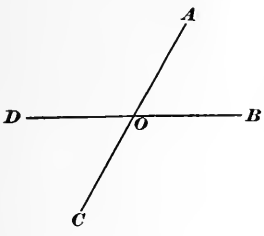

Fig. 8.

52. When two right lines intersect in such a manner that the adjacent angles are equal, the lines are said to be **perpendicular** to each other. For example, in Fig. 9, *CD* has been so drawn

that all the adjacent angles, COB and COA, COB and BOD, etc. are equal; hence, AB is said to be perpendicular to CD, and CD is said to be perpendicular to AB. All four angles, AOC, COB, BOD, and DOA are equal, and each is called a **right angle.**

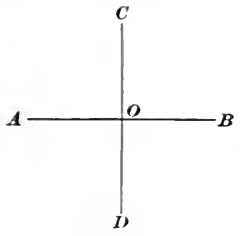

Fig. 9.

53. A **horizontal line** is one that is parallel to the horizon or to the water level; with the book held in its usual position for reading, AB, Fig. 9, is a horizontal line. Any line that is perpendicular to a horizontal line is a **vertical line.** In Fig. 9, CD is a vertical line. All vertical lines have the same direction as a *plumb line.*

54. An angle that is smaller than a right angle is called an **acute** angle. In Fig. 10, the angle AOB is evidently smaller than the right angle COB; hence AOB is an acute angle.

If an angle is greater than a right angle, it is called an **obtuse angle.** In Fig. 11, AOB is an obtuse angle, because it is greater than the right angle COB. In Fig. 8, AOB and COD are acute angles, and AOD and BOC are obtuse angles.

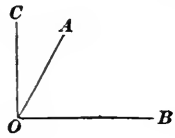

Fig. 10.

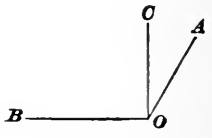

Fig. 11.

55. Angles are measured in several ways, the most common method being to use an arc of a circle. This method is called the angular measure of angles, and the table of angular measure was given in *Arithmetic.* The entire circle is supposed to be divided into 360 equal parts called **degrees,** the abbreviation for which is (°); each degree is then divided into 60 equal parts called **minutes,** the abbreviation for which is (′); and each minute is divided into 60 equal parts called **seconds,** abbreviation (″).

The draftsman measures an angle by means of an instrument, usually made of metal or paper, called a **protractor,** which is a half circle divided into degrees and half degrees or degrees and quarter degrees. Evidently, the length of the sides of an angle have nothing to do with the size of the angle, since lengthening or shortening the sides does not change the *direction* of the lines. Consequently, by laying the protractor on the angle in such a manner that the center of the half circle coincides with the vertex of

the angle and the bottom, or straight, side of the protractor coincides with one side of the angle, the other side will cross the arc of the half circle and the size of the angle can be read on the graduated edge. This is clearly shown in Fig. 12. Here the protractor P is so placed that its center coincides with the vertex O of the angle, and the bottom side, or edge, of the protractor coincides with the side OB of the angle; the other side, OA, of the

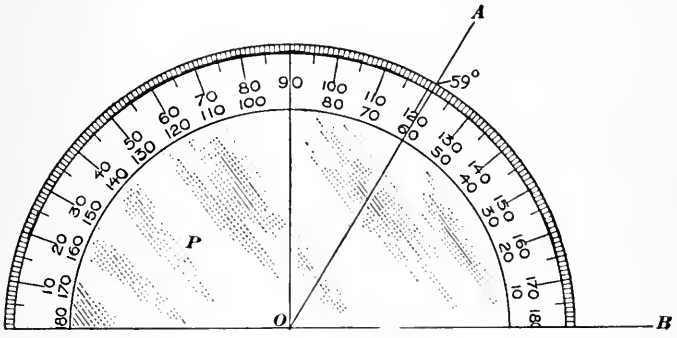

Fig. 12.

angle crosses the arc at 59°, which is the size of the angle. More accurate instruments are in use, but they all are based on the same principle.

55. A **surface** has no thickness. When a surface is perfectly flat, so that a right line may be drawn on it in any direction and anywhere on it, the surface is called a **plane.** A plane surface may be tested by laying a straightedge anywhere on it; if the straightedge coincides with the surface throughout the length of the straightedge, no matter where it is placed, the surface is a plane surface.

Planes, like right lines, are supposed to be infinite in extent; that is, they are infinite in length and infinite in breadth; but, like lines, only parts of planes are considered in practice.

56. Two planes intersect in a right line. For example, referring to Fig. 13, the planes $ABCD$ and $EFGH$ intersect in the right line MN, which is called the **line of intersection.**

If from any point o in the line of intersection MN a line oa be drawn in the plane $EFGH$, perpendicular to MN, and a line ob be drawn in the plane $ABCD$, also perpendicular to MN, the angle aob is the angle which the planes make with each other.

If this angle is a right angle, in which case, *oa* and *ob* are perpendicular to each other, the two planes are then said to be perpen-

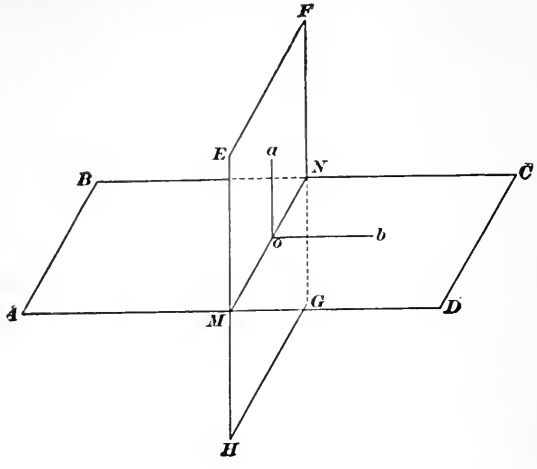

FIG. 13.

dicular to each other; otherwise, they make an acute or obtuse angle with each other, according as the angle *aob* is acute or obtuse.

PLANE FIGURES

57. A **plane figure** is any outline that can be drawn on a plane surface; and, since a plane is infinite in length and breadth, a plane figure may be of any size and any shape. To be complete, however, the figure must close; that is, if the figure be traced by moving the pencil over it, then, starting from any point on the outline and passing over the entire figure, the pencil must return to the point from which it started.

58. Polygons.—The simplest plane figures are those made up entirely of right lines—called **polygons,** which means many angles, from *poly* (meaning many) and *gonia* (meaning angles), and so called because a *polygon always has as many angles as it has sides.*

The right lines that form the outline of a polygon are called the **sides** of the polygon, and the angles included between the sides are called the **angles** of the polygon. The sum of the lengths of the sides is called the **perimeter** of the polygon. The perimeter, therefore, is the length of the outline that bounds the polygon; it equals the distance around it.

59. Polygons are named in accordance with the number of sides that they have. A polygon with three sides is called a **triangle;** one with four sides is called a **quadrilateral;** one of five sides is a **pentagon;** one of six sides is a **hexagon;** one of seven sides is a **heptagon;** one of eight sides is an **octagon;** one of nine sides is a **nonegon;** one of ten sides is a **decagon;** one of eleven sides is an **undecagon;** one of twelve sides is a **dodecagon;** etc. In practical work, the triangle, quadrilateral, and hexagon are very freely used, and the pentagon, octagon, and decagon are occasionally used; the other polygons are practically never used.

60. A **regular polygon** is one in which all the sides and all the angles are equal. Fig. 14 shows regular polygons of 3, 4, 5, 6, 8,

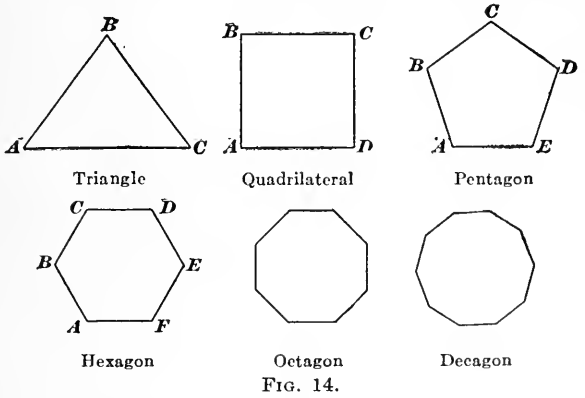

FIG. 14.

and 10 sides. In each figure, the sides are all equal in length, and the angles (called the **interior angles**) are all equal. Thus, in the regular pentagon, $AB = BC = CD = DE = EA$, and $ABC = BCD = CDE = DEA = EAB$.

61. To find the number of degrees in one of the equal angles of a regular polygon, let n = the number of sides and $a°$ = the number of degrees in one of the equal angles; then

$$a° = \frac{(n-2)}{n} \times 180°$$

For instance, in the regular triangle, the interior angles are equal to $\frac{3-2}{3} \times 180° = 60°$; in the regular quadrilateral, $a° = \frac{4-2}{4} \times 180° = 90°$; in the regular hexagon, $a° = \frac{6-2}{6} \times 180° = 120°$; etc.

TRIANGLES

62. Triangles are classified in two ways: according to their angles, and according to their sides. When the angles are considered, triangles are called **right triangles,** when they have one right angle; **oblique triangles,** when they have no right angle; and **equiangular triangles,** when all the angles are equal. An equiangular triangle is also an oblique triangle. Fig. 15 shows a right triangle, the right angle being at B. It may here be remarked that when there is no possibility of misunderstanding, angles may be named by a single letter placed at the vertex. Thus, in Fig. 15, angle C is the angle ACB, angle A is the angle CAB, and the angle B is the angle ABC.

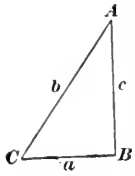

Fig. 15.

When the sides are considered, triangles are called **isosceles, scalene,** or **equilateral triangles.** An **isosceles triangle** is one that has two equal sides, see Fig. 16; here $CA = CB$. A **scalene triangle** is one in which all the sides have different lengths, see Fig. 17. An **equilateral** triangle is one in which all the sides are equal, see Fig. 18. A scalene triangle is always an oblique triangle. An equilateral triangle is also an isosceles triangle; it

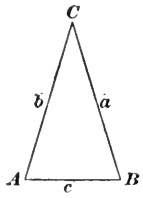

Fig. 16.

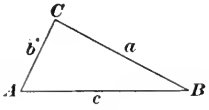

Fig. 17.

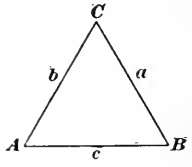

Fig. 18.

is likewise an equiangular triangle. A right triangle is usually a scalene triangle, but if the two sides that enclose or form the right angle are equal, it is then an isosceles triangle also.

For convenience in mathematical operations, triangles are lettered with capital letters at the vertexes and with small letters (lower case letters) placed at the middle of the sides, the lower case letters being in each instance the same as the capital letters at the angles opposite the sides. Thus, referring to Figs. 15–18, side a is opposite angle A, side b is opposite angle B, and side c is opposite angle C.

The side on which any triangle (or any polygon) is considered as standing, the plane of the figure being supposed to be vertical, is called the **base.** In Fig. 14, AC is the base of the triangle; AD is the base of the quadrilateral; and AE is the base of the pentagon. In Fig. 15, CB is the base; in Figs. 16–18, AB is the base.

63. Some Properties of Triangles.—(**1**) In any triangle, the sum of the three angles is always 180°; thus, in Figs. 15–18, $A + B + C = 180°$. Therefore, if two of the angles are known, the third can be found by subtracting the sum of the two known angles from 180°. Thus, in Fig. 17, if $A = 68° 23'$ and $B = 24° 35'$, $C = 180° - (68° 23' + 24° 35') = 87° 2'$.

(**2**) In a right triangle, one of the angles being a right angle and therefore equal to 90°, the sum of the other two angles must be $180° - 90° = 90°$; consequently, both angles must be acute, since neither can exceed (nor even equal) 90°. Also, this sum must be 90°; because the sum of the three angles is 180°, and since one of the angles if 90°, the sum of the other two angles must be $180° - 90° = 90°$. Hence, if one of the acute angles of a right triangle is known, the other can be found by subtracting the known angle from 90°. Thus, in Fig. 15, suppose that the angle $A = 28° 42'$; then the angle $C = 90° - 28° 42' = 61° 18'$.

(**3**) The longest side is always opposite the greatest angle, and the greatest angle is always opposite the longest side. In Figs. 15 and 17, b and c are respectively the longest sides; hence, B and C are respectively the largest angles.

(**4**) If any two sides of a triangle are equal, the angles opposite those sides are also equal. In Fig. 16, a and b are equal; hence $A = B$. Consequently, in every isosceles triangle, two of the angles are equal.

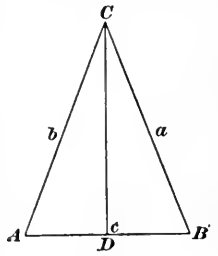

Fig. 19.

(**5**) If an isosceles triangle be so placed that the unequal side forms the base, as in Fig. 19, and a perpendicular to the base is drawn from the vertex of the angle opposite, the perpendicular divides the base into two equal parts. The perpendicular is then said to **bisect** the base, the word bisect meaning to cut in halves. In Fig. 19, $AC = CB$, and CD is perpendicular to AB; therefore, $AD = DB$.

(**6**) If two angles of one triangle are equal to two angles of another triangle, the third angle of the first triangle is equal to

the third angle of the second, because the sum of the two angles subtracted from 180° is the same in both cases. In Fig. 20, if $A = A'$ and $C = C'$, then $B = B'$.

64. Similar Triangles.—If the angles of one triangle are equal to the angles of another, the two triangles are said to be **similar.** If the sides of one triangle are equal to the sides of another, then the triangles are *equal.*

When two triangles are similar, as ABC and $A'B'C'$ in Fig. 20, one may be **superposed** on the other; that is, the vertex of one of

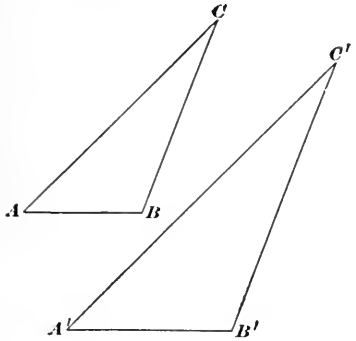

Fig. 20.

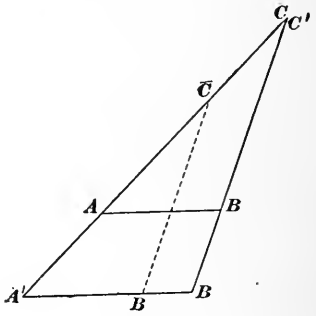

Fig. 21.

the angles of one triangle may be placed over the vertex of the equal angle of the other triangle, and the sides of the two angles can then be made to coincide, since they both have the same direction from the common vertex, see Fig. 21. Here the vertex C of the angle C in Fig. 20 is placed over C', and the sides CA and CB are made to coincide with the sides $C'A'$ and $C'B'$; then AB is parallel to $A'B'$.

65. When two triangles are similar, the sides opposite the equal angles are **proportional.** Thus, in Fig. 20, if the triangles ABC and $A'B'C'$ are similar, and angle A = angle A' and angle C = angle C', then $AB : A'B' = AC : A'C'$; also, $AB : A'B' = BC : B'C'$, and $BC : B'C' = AC : A'C'$. This is a very important principle, and should be remembered.

Had the angle A been superposed on the angle A', Fig. 20, the result would be as shown in Fig. 21, the dotted line BC being parallel to $B'C'$. That AB, Fig. 21, is parallel to $A'B'$ is evident from the fact that since angle A = angle A' and the sides AC and $A'C'$ coincide, AB has the same direction as $A'B'$, and when two right

lines have the same direction, they must either coincide or be parallel. For the same reason, BC is parallel to $B'C'$. Hence, *if two sides and an angle of one triangle are equal to two sides and an angle of another triangle, the triangles are equal.*

66. The Right Triangle.—The right triangle is so important that it requires special treatment. Referring to Fig. 22, ABC is a right triangle, right-angled at C. The side C, which is opposite the right angle, is called the **hypotenuse;** the hypotenuse is always the longest side of a right triangle, since it is opposite the largest angle. The other two sides are called the *short sides* or **legs.** In every right triangle, the square of the hypotenuse is equal to the sum of the squares of the legs; that is, referring to Fig. 22,

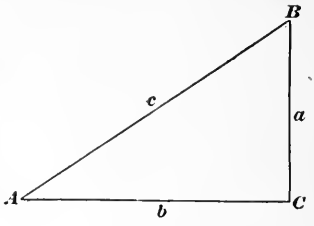

FIG. 22.

$$c^2 = a^2 + b^2 \quad (1)$$

This is a very important principle, and should be memorized; it is used more than any other principle in mensuration. By means of it, any side of a right triangle can be found if the lengths of the other two are known. For example, if a and b are known,

$$c = \sqrt{a^2 + b^2} \quad (2)$$

If c and a are known, $$b = \sqrt{c^2 - a^2} \quad (3)$$

If c and b are known, $$a = \sqrt{c^2 - b^2} \quad (4)$$

Formulas (2), (3), and (4) are derived from formula (1) by solving (1) for c, b, and a.

EXAMPLE 1.—Referring to Fig. 22, suppose the length of AC is $4\frac{3}{8}$ in. and the length of BC is $2\frac{7}{8}$ in.; what is the length of AB?

SOLUTION.—Since $4\frac{3}{8} = 4.375$, and $2\frac{7}{8} = 2.875$, substitute the values for a and b in formula (2), obtaining

$$c = \sqrt{4.375^2 + 2.875^2} = 5.2351 - \text{in.} \quad Ans.$$

It is evident that formula (1) might have been used instead of formula (2); in fact formula (1) may be used in every case of this kind.

EXAMPLE 2.—In Fig. 23, P and P' are two pulleys, whose centers are 10 ft. $8\frac{1}{2}$ in. and 4 ft. $6\frac{3}{4}$ in., respectively, from the floor AB, which is supposed to be level. By dropping plumb lines from the shafts, the horizontal distance between the pulley centers is found to be 14 ft. $7\frac{1}{4}$ in. What is the distance $O'O$ between the pulley centers?

SOLUTION.—Since AB is horizontal and OC and $O'D$ are plumb lines, the angle OCD is a right angle. Drawing $O'E$ parallel to OCD, it must be perpendicular to OC (since AB is perpendicular to OC), and $O'EO$ is also a right angle. Drawing $O'O$, $O'EO$ is a right triangle, in which the side $O'E$ = 14 ft. 7.25 in. and OE = 10 ft. 8.5 − 4 ft. 6.75 in. = 6 ft. 1.75 in. For con-

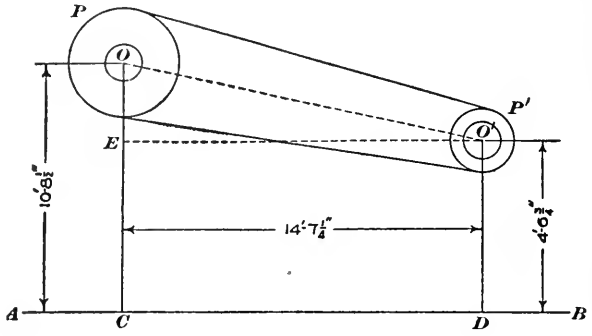

FIG. 23.

venience in calculation, reduce the lengths of these sides to inches, obtaining $O'E$ = 175.25 in. and OE = 73.75 in. Substituting these values in formula (2), $O'O = \sqrt{175.25^2 + 73.75^2} = 190.14-$ in. = 15 ft. 10⅛ in., very nearly (0.14 = ⅛ nearly). *Ans.*

67. Equality of Angles.—In connection with the last example, it was stated that the angle $O'EO$ was a right angle, because $O'E$ was perpendicular to OC. It might have been stated that $O'EO$ is a right angle because it is equal to OCD, which is a right

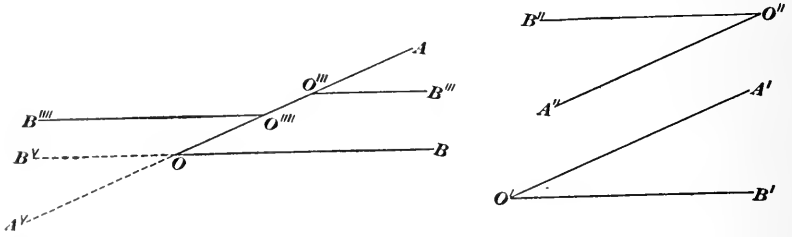

FIG. 24.

angle, in accordance with the following principle: *If the two sides of one angle are parallel to the two sides of another angle, both sides of which extend in the same or both in opposite directions, the two angles are equal.* Thus, referring to Fig. 24, if $A'O'$ be parallel to AO and $B'O'$ be parallel to BO, both sides extending in the same direction, $A'O'B'$ is equal to AOB. Again, if $A''O''$ be parallel to AO and $B''O''$ be parallel to BO, both sides

extending in opposite directions to AO and BO, $A''O''B''$ is equal to AOB. If one side of an angle coincide with a side of another angle, and the second side of the first angle be parallel to the second side of the other angle, the two angles are equal. Thus, if $O'''B'''$ and $O''''B''''$ be parallel to OB, Fig. 24, $AO'''B'''$ and $OQ'''B'''$ are equal to AOB. This a special case of the above principle, in which two of the parallel lines coincide. For the same reason $A^{v}OB^{v} = OO''''B'''' = AOB$. Referring to Fig. 23, OE coincides with OC, and since $O'E$ is parallel to CD, $O'EO = DCO$.

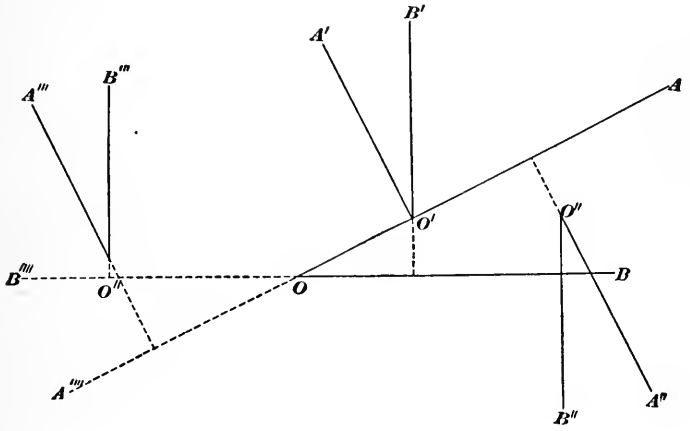

Fig. 25.

A second principle applying to equality of angles is: *If the two sides of one angle are perpendicular to the two sides of another angle and both angles are acute or both obtuse, the two angles are equal.* Referring to Fig. 25, suppose that $A'O'$ and $B'O'$ are perpendicular to AO and BO, respectively; then $A'O'B' = AOB$. Again, suppose that $O''B''$ and $O''A''$ are perpendicular to OB and OA, respectively; then $B''O''A'' = BOA$. Finally, suppose that $A'''O'''$ and $B'''O'''$ are respectively perpendicular to AO and BO produced (indicated by the dotted lines; then, by the first principle, $A''''OB'''' = AOB$, and $A'''O'''B''' = AOB$.

These two principles are very important and are frequently used in connection with practical problems.

68. Area of Triangles.—In Fig. 26, let AC be the base of the triangle ABC. From the vertex of the angle B opposite the base, drop a perpendicular BD; the point where the perpendicular cuts the base is called the **foot** of the perpendicular, and that part

of it included between the vertex B and the foot D is called the **altitude** of the triangle. The word altitude means *height*, and it is usually denoted in formulas by the letter h. In Fig. 27, it is necessary to produce the base in order that it may be cut by a perpendicular from B. In both figures, $h = BD$ is the altitude.

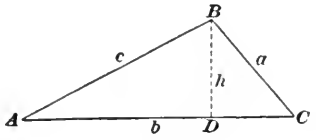

FIG. 26.

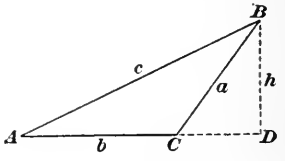

FIG. 27.

In any triangle, the area is equal to half the product of the base and altitude. Hence, letting A = the area, b = the base, and h = the altitude,

$$A = \tfrac{1}{2}bh = \frac{b \times h}{2}$$

Any side may be taken as the base, the altitude being the perpendicular distance between the base and the vertex of the angle opposite the base. Thus, in Fig. 28,

$$A = \frac{AC \times BD}{2} = \frac{BC \times AF}{2} = \frac{AB \times CE}{2}.$$

Here AF is the altitude when BC is the base, and CE is the altitude when AE is the base.

In a right triangle, if one leg is taken as the base, the other leg is the altitude, see Fig. 22. Consequently, the area of a right triangle is equal to half the product of its legs.

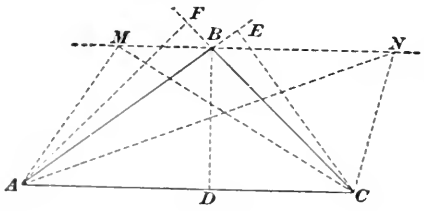

FIG. 28.

If two triangles have the same base and the same altitude, their areas are equal. Thus, in Fig. 28, if MN is parallel to AC, the altitudes of the three triangles ABC, AMC, and ANC are equal; and since they all have the same base AC, all three triangles have the same area.

EXAMPLE.—If the base of a triangle is 2 ft. 9 in. and the altitude is 1 ft. 4 in., what is the area of the triangle?

SOLUTION.—The lengths must be expressed in the same single unit, expressing them in feet, 2 ft. 9 in. = 2.75 = $2\frac{3}{4}$ ft.; 1 ft. 4 in. = $1\frac{1}{3}$ ft. Then, applying the formula, $A = (2.75 \times 1\frac{1}{3}) \div 2 = 1.8\frac{1}{3}$ sq. ft. *Ans.*

Or, expressing the lengths in inches, 2 ft. 9 in. = 33 in.; 1 ft. 4 in. = 16 in. Then, $A = \frac{33 \times 16}{2} = 264$ sq. in. $= \frac{264}{144} = 1\frac{5}{6} = 1.8\frac{1}{3}$ sq. ft. *Ans.*

Always remember that feet multiplied by feet give square feet and inches multiplied by inches give square inches.

69. If the triangle is isosceles (an equilateral triangle is also isosceles), and the unequal side is taken as the base, the line representing the altitude bisects the base, see (**5**) of Art. **63**. Hence, referring to Fig. 19, if the three sides a, b, and c are known, a and b being equal, the altitude $CD = h = \sqrt{b^2 - \left(\frac{c}{2}\right)^2} = \frac{1}{2}\sqrt{4b^2 - c^2}$, by formula (4) or (3), Art. **66**; and the area of the triangle is,

$$A = \tfrac{1}{2} \times c \times \tfrac{1}{2}\sqrt{4b^2 - c^2} = \frac{c}{4}\sqrt{4b^2 - c^2}.$$

EXAMPLE.—In an equilateral triangle, the length of each side is $7\frac{1}{4}$ in.; what is the area of the triangle?

SOLUTION.—In this case, $b = c$; hence, $A = \frac{7.25}{4}\sqrt{4 \times 7.25^2 - 7.25^2}$ $= \frac{7.25}{4}\sqrt{3 \times 7.25^2} = \frac{7.25^2}{4}\sqrt{3} = 22.760+$ sq in. *Ans.*

For purposes of reference, let a = one of the equal sides of an isosceles triangle, and let c be the unequal side; then

$$A = \frac{c}{4}\sqrt{4a^2 - c^2} \qquad (1)$$

For an equilateral triangle, let c = one of the sides; then

$$A = \frac{c^2}{4}\sqrt{3} = .43301c^2 \qquad (2)$$

70. If all three sides of any triangle are known and the altitude is not known and cannot conveniently be measured, let $p = a + b + c$; that is, p equals the sum of the three sides. Then,

$$A = \tfrac{1}{4}\sqrt{p(p - 2a)(p - 2b)(p - 2c)}$$

In this formula, a, b, and c, are the three sides of the triangle.

EXAMPLE.—Suppose the three sides of a triangle are $6\frac{1}{2}$ in., $5\frac{3}{4}$ in., and $8\frac{1}{8}$ in.; what is the area of the triangle?

SOLUTION.—Here $p = 6.5 + 5.75 + 8.125 = 20.375$. It does not matter which of the sides are designated by a, by b, or by c; hence, taking them in the order given, $p - 2a = 20.375 - 2 \times 6.5 = 7.375$, $p - 2b = 20.375$

$- 2 \times 5.75 = 8.875$, and $p - 2c = 20.375 - 2 \times 8.125 = 4.125$. Substituting these values in the formula,

$$A = \tfrac{1}{4}\sqrt{20.375 \times 7.375 \times 8.875 \times 4.125} = 18.542+. \quad Ans.$$

When the triangle is equilateral, $a = b = c$, $p = 3a$, and $A = \frac{1}{4}\sqrt{3a(3a - 2a)(3a - 2a)(3a - 2a)} = \frac{1}{4}\sqrt{3a^4} = \frac{a^2}{4}\sqrt{3}$, which is the same as formula (2), Art. **69**, when a is substituted for c.

Evidently p is the distance around the triangle; it is called the **perimeter,** *peri* meaning around and *meter* meaning measure. The word is applied to the distance around any plane figure; and when the plane figure is a polygon, the perimeter of the polygon is the sum of the lengths of its sides.

71. Projections.—Hereafter, unless a curve or broken line is specified, the word *line* will be understood to mean a right line—usually, a right-line segment.

If from any point a perpendicular be let fall upon a line, the point in which the perpendicular intersects the line (the foot of

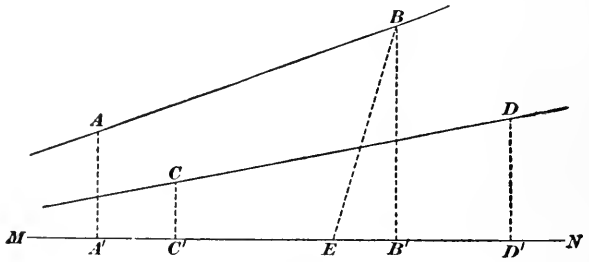

Fig. 29.

the perpendicular) is called the **projection** of the point upon the line; and the distance from the point to its projection is the perpendicular distance between the point and the line. Thus, in Fig. 29, A', B', C', and D' are the projections of A, B, C, and D upon the line MN.

The perpendicular distance from a point to a line is always the *shortest* distance from the point to the line. Thus, if from B, any line BE be drawn, BE is the hypotenuse of a right triangle of which BB', the perpendicular distance, is one leg, and the hypotenuse is always the longest side of a right triangle.

If two points of any line are projected on another line in the same plane, the line segment between the two points of projection

is called the projection of the line segment between the two points projected. Thus, in Fig. 29, $A'B'$ is the projection of AB upon MN, and $C'D'$ is the projection of CD upon MN. Hence, to project any line, straight or curved, upon a right line in the same plane, project its two end points upon the right line, and the segment included between the two points of projection will be the projection of the given line. In Fig. 30, $A'B'$, $C'D'$, and $E'F'$ are the projections of AB, CD, and EF upon the line MN.

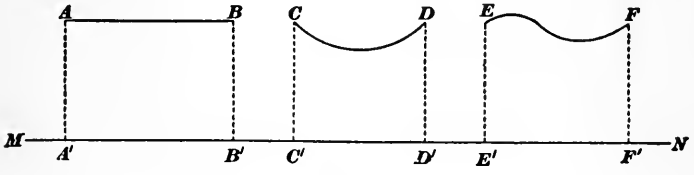

Fig. 30.

It will be noted that the projection of a line is always shorter than the given line, except when the given line is a right line parallel to the line of projection; in which case, the given line and the projected line are equal. In Fig. 30, AB is parallel to MN; hence, $A'B' = AB$.

72. Relation between Sides of any Triangle.—In Figs. 31 and 32, suppose that the angle A is acute. Drop a perpendicular

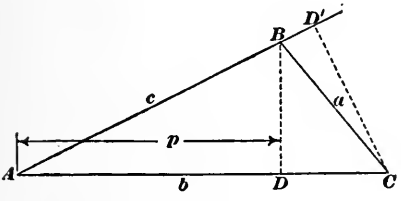

Fig. 31.

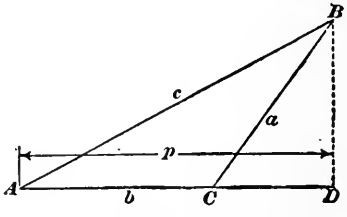

Fig. 32.

from B to AC; then AD is the projection of AB upon AC. Represent the projection AD by p. In Fig. 31, $DC = b - p$, and in the right triangle BDC, $BD^2 = a^2 - (b - p)^2 = a^2 - b^2 + 2bp - p^2$. In the right triangle, BDA, $BD^2 = c^2 - p^2$; therefore, $BD^2 = a^2 - b^2 + 2bp - p^2 = c^2 - p^2$, or transposing terms,

$$a^2 = b^2 + c^2 - 2bp \quad (1)$$

In Fig. 32, $DC = p - b$, and in the right triangle BDC, $BD^2 = a^2 - (p - b)^2 = a^2 - p^2 + 2pb - b^2$. In the right triangle BDA, $BD^2 = c^2 - p^2$; therefore, $BD^2 = a^2 - p^2 + 2bp - b^2 = c^2 - p^2$; from which, $a^2 = b^2 + c^2 - 2bp$, which is the same as (1).

Stated in words, *the square of the side opposite an acute angle of any triangle is equal to the sum of the squares of the other two sides minus twice the product obtained by multiplying one of these sides by the projection of the other side upon that side.* Thus, in Fig. 31, the projection of AC upon AB is $AD' = p'$, and $a^2 = b^2 + c^2 - 2cp'$. This, evidently, is the same case as Fig. 32, when the triangle is turned over and AB of Fig. 31 is made the base.

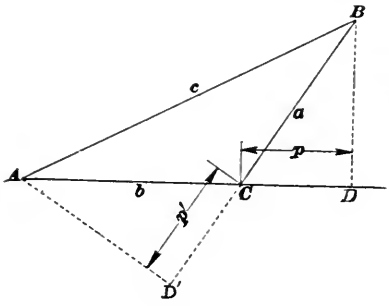

FIG. 33.

In Fig. 33, $DA = p + b$, p being the projection DC of a upon AC. Then, $BD^2 = a^2 - p^2 = c^2 - (b + p)^2 = c^2 - b^2 - 2bp - p^2$; from which,

$$c^2 = a^2 + b^2 + 2bp \quad (2)$$

Stating formula (2) in words, *the square of the side opposite an obtuse angle of any triangle is equal to the sum of the squares of the other two sides plus twice the product obtained by multiplying one of these sides by the projection of the other side upon hat side.* Thus, in Fig. 33, the projection of b upon BC is $CD' = p'$, and $c^2 = a^2 + b^2 + 2ap'$.

EXAMPLE.—In the triangle ABC, in which the side AB is the longest, $AB = 22$ in., $AC = 13$ in., and the projection of AC upon AB measures 9.73 in., what is the length of the side CB?

SOLUTION.—The sides AB and AC evidently include an acute angle, since the longest side is always opposite the largest angle; hence, formula (1) applies to the case, substituting c for b, so that the formula becomes $a^2 = b^2 + c^2 - 2cp$; whence,

$$a = \sqrt{b^2 + c^2 - 2cp} = \sqrt{13^2 + 22^2 - 2 \times 22 \times 9.73}$$
$$= AB = 15.029 \text{ in.} \quad Ans.$$

If the triangle is a right triangle, the projection of one leg upon the other is a point, which has no length and is therefore 0. In this case, $c^2 = a^2 + b^2 + 2b \times 0 = a^2 + b^2$, which is the same as formula (1) in Art. **66.**

QUADRILATERALS

73. The Parallelogram.—When the opposite sides of a quadrilateral are parallel, the quadrilateral is called a **parallelogram;** Fig. 34 shows two parallelograms $ABDC$, the sides AB and CD being parallel and equal, and the sides AC and BD being also parallel and equal.

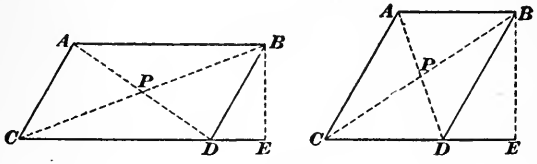

Fig. 34.

When the interior angles are not all equal and the sides are not all equal the parallelogram is called a **rhomboid;** both parallelograms in Fig. 34 are rhomboids.

If the angles are not all equal, but the sides are equal, the parallelogram is called a **rhombus;** see Fig. 35, in which $AB = BD = DC = CA$.

The **diagonal** of a parallelogram is a line drawn through the figure from the vertex of one acute angle to the vertex of the other acute angle, the line CB in Figs. 34 and 35; this is called the **long diagonal.** A line AD, drawn from the vertex of one obtuse angle to the vertex of the other obtuse angle, Figs. 34 and 35, is called the **short diagonal.**

The perpendicular distance BE between two parallel sides, in Figs. 34 and 35, is called the **altitude** of the parallelogram.

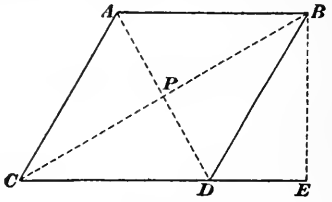

Fig. 35.

74. Some Properties of Parallelograms.—(1) The diagonally opposite angles of any parallelogram are equal; thus, in Figs. 34 and 35, $C = B$ and $A = D$. This is a consequence of Art. **67,** since AB is parallel to CD and AC is parallel to BD.

(2) A diagonal divides the parallelogram into two equal triangles. Thus, $ACB = CDB$ and $ACD = ABD$. This is evident since the three sides of one triangle are equal to the three sides of the other, the diagonal being a common side.

(3) The diagonals of a parallelogram bisect each other; that

is, P being the point of intersection of the diagonals, $PA = PD$ and $PB = PC$.

(**4**) The sum of the interior angles of any parallelogram is equal to 4 right angles or 360°. For, referring to Figs. 34 and 35, angle BDE = angle ACD, and $CDB + BDE = CDB + ACD = C + D$ = 2 right angles = 180°. Since $A = D$ and $B = C$, $A + B + D + C = 2 \times 180° = 360°$. Therefore, if one angle of a parallelogram is known, all are known. Thus, suppose the angle C in Fig. 35 is 55°; then angle D is $180° - 55° = 125°$, $A = 125°$, and $B = 55°$.

75. The side on which the parallelogram is supposed to stand is called the **base**; in Figs. 34 and 35, CD is the base.

The **area of any parallelogram** is equal to the product of the base and altitude; thus, the areas of the parallelograms in Figs, 34 and 35 is equal to $CD \times BE$. Let A = the area, l = the length of the base, and h = the altitude; then,

$$A = lh.$$

This follows at once from the rule for finding the area of a triangle. Thus, area of triangle CDB, Figs. 34 and 35, equals $\frac{1}{2} \times BE \times CD$, and since $CAB = CDB$, the area of the parallelogram is $2 \times \frac{1}{2}\, CD \times BE = CD \times BE$.

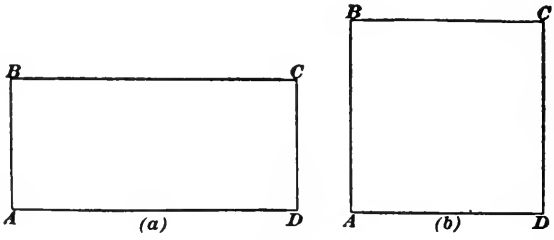

Fig. 36.

76. If one angle of a parallelogram is a right angle, all the angles are right angles, in accordance with Art. **74**, and the parallelogram is then called a **rectangle**; see (*a*), Fig. 36. Here $A = B = C = D$ = a right angle = 90°, and $BC = AD$ and $AB = DC$.

If the four sides of a rectangle are equal, it is called a **square.** Thus, (*b*), Fig. 36, is a square, because $AB = BC = CD = DA$ and $A = B = C = D$ = a right angle.

Referring to (*a*), Fig. 36, it will be noted that if AD is the base, $CD = AB$ is the altitude, and if AB is the base, $AD = BC$ is the altitude. Hence, if one side of a rectangle be called the *length*, and one of the sides perpendicular to it be called the *breadth* or *depth* (according to whether the plane of the rectangle is supposed to be horizontal or vertical), the area of the rectangle is equal to the product of the length and breadth or depth; that is,

$$A = lb = ld.$$

in which A = the area, $l = AD$, and $b = d = AB = DC$.

When the rectangle is a square, $l = b = d$, and $A = l \times l = l^2$.

77. Referring to Fig. 37, $ABCD$ is a rhombus. Draw the two diagonals, and represent the long diagonal by d and the short diagonal by d'. The diagonals intersect in P, which is the middle point of BD and AC (see Art. **74**), and the four angles about P are right angles. That $BPA = BPC$ is a right triangle is evident from (**5**), Art. **63**. Here ABC is an isosceles triangle and since P is the middle point of the base, the line from P to B is perpendicular to the base (see Fig. 19). Considering the triangle DAB (= DCB), AP is the altitude and DB is the base. But $AP = \frac{d'}{2}$ and $DB = d$; hence, area of $DAB = \frac{1}{2} \times d \times \frac{d'}{2}$, and area of rhombus $ABCD$ is

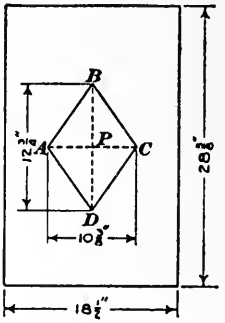

Fig. 37.

$$A = \tfrac{1}{2} \times d \times \frac{d'}{2} \times 2 = \tfrac{1}{2}dd'. \qquad (1)$$

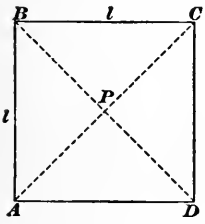

Fig. 38.

That is, the area of a rhombus is equal to one-half the product of its diagonals.

Referring to Fig. 38, $ABCD$ is a square—a rhombus whose angles are right angles. The diagonals AC and BD are equal and formula (**1**) becomes

$$A = \tfrac{1}{2}dd = \tfrac{1}{2}d^2. \qquad (2)$$

If it is desired **to find the length of the diagonal of any square,** let l = one of the sides; then, $d^2 = l^2 + l^2 = 2l^2$, and

$$d = \sqrt{2l^2} = l\sqrt{2} = 1.4142l. \qquad (3)$$

If the diagonal of a square is given and it is desired to find the length of the sides, $l^2 + l^2 = d^2$ or $2l^2 = d^2$, and $l^2 = \frac{d^2}{2}$,

from which $$l = \frac{d}{2}\sqrt{2} = .707107d \qquad (4)$$

Example 1.—Fig. 37 is a drawing of a flat, rectangular plate having a hole in it shaped like a rhombus. From the dimensions given, find the area of the plate.

Solution.—The area of the plate is evidently equal to the area of the rectangle minus the area of the rhombus.

Area of rectangle = 18.5×28.625 = 529.5625 sq. in.
Area of rhombus = $\frac{1}{2} \times 10.375 \times 12.75$ = 66.1406 sq. in.
area of plate = 463.4219 sq. in.

Therefore, area of plate is 463.92 sq. in. *Ans.*

Example 2.—What is the diagonal of a square, one side of which measures $9\frac{5}{16}$ in.?

Solution.—Substituting in formula (3),

$$d = 1.4142 \times 9\tfrac{5}{16} = 13.170- \text{ in.} \quad \textit{Ans.}$$

Example 3.—If the diagonal of a square is 11.82 in., what is the length of one of the sides?

Solution.—Applying formula (4),

$$l = .707107 \times 11.82 = 8.358 \text{ in.} \quad \textit{Ans.}$$

78. Other Quadrilaterals.—If two sides of a quadrilateral are parallel and the other two sides are not parallel, the quadrilateral is called a **trapezoid.** In Fig. 39, (*a*) and (*b*) are trapezoids, the

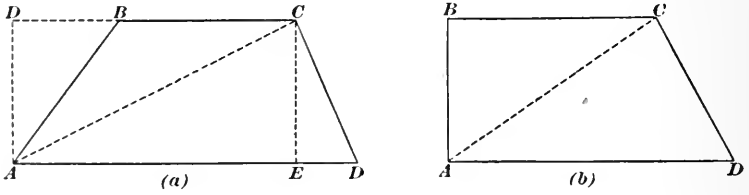

Fig. 39.

side BC being parallel to AD. The trapezoid in (*b*) is peculiar from the fact that it has two right angles, situated at A and B.

If no two sides of a quadrilateral are parallel, it is then called a **trapezium**; see Fig. 40.

To find the area of a trapezoid, divide it into two triangles by drawing a diagonal AC; then, if BC be taken as the base of one triangle and AD as the base of the other, the altitude of these triangles is $AD = CE$ in (*a*), Fig. 39, and AB = the perpendicular distance between the parallel sides in (*b*), Fig. 39. Denoting the

altitude by h, the side BC by a, and the side AD by b, the area of one triangle is $\frac{1}{2}ah$; of the other, $\frac{1}{2}bh$; and the area of the trapezoid is $\frac{1}{2}\,ah + \frac{1}{2}\,bh = \frac{1}{2}h(a + b)$; or,

$$A = \frac{a + b}{2} \times h = \frac{(a + b)h}{2}.$$

This is a very important formula; it is frequently used, and should be carefully committed to memory. Stated in words, the formula becomes the following rule: *The area of a trapezoid is*

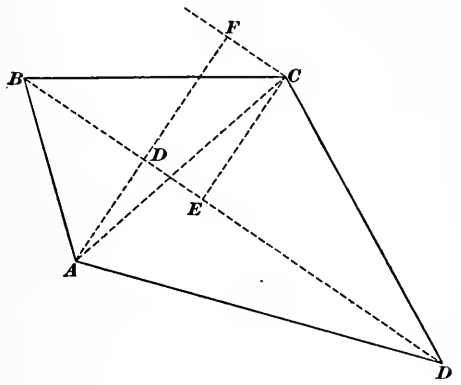

Fig. 40.

equal to half the sum of the parallel sides multiplied by the perpendicular distance between them.

Example.—What is the area of a trapezoid, the lengths of the parallel sides being $6\frac{1}{2}$ in. and $7\frac{1}{4}$ in. and the altitude being $9\frac{3}{8}$ in.?

Solution.—The sum of the parallel sides is $6.5 + 7.25 = 13.75$; hence, the area is $\frac{13.75 \times 9.375}{2} = 64.453+$ sq. in. *Ans.*

It is better not to divide by 2 until after the multiplication has been performed, unless one of the factors is an even number. In the example just given, both factors were odd numbers.

79. To find the area of a trapezium, draw a diagonal, as BD, Fig. 40, thus dividing the trapezium into two triangles. Using the diagonal as a base, draw the perpendiculars AD and CE from the vertexes opposite the base; then, area of trapezium is equal to $\frac{1}{2}BD \times EC + \frac{1}{2}BD \times AD = \frac{1}{2}BD\ (AD + EC)$.

If through one of the vertexes, say C, a line be drawn parallel to the base (diagonal) BD and a perpendicular be drawn to this line from the other vertex, the length of this perpendicular is

equal to $AD + EC$. Representing this perpendicular by h, the base (diagonal) by b, and the area by A,

$$A = \tfrac{1}{2}bh.$$

80. The rules and formulas just given for finding the areas of quadrilaterals apply only to what are termed **convex polygons.** All polygons that have been illustrated up to this point are convex polygons; and in any convex polygon, if any one of their sides be produced at either end of the side, the produced part will lie outside of the bounding line of the polygon. In Fig. 41, (*a*) is a quadrilateral and (*b*) is a pentagon. If the sides AB or

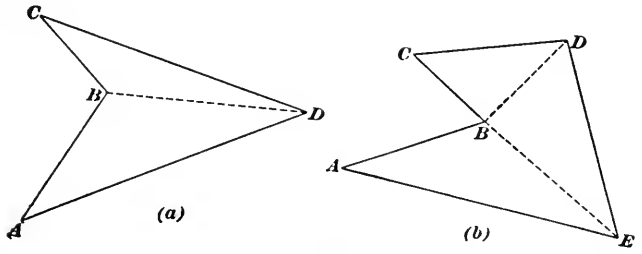

Fig. 41.

CD be produced from the end B, they will enter the space included by the bounding lines of the polygons. Angles like ABC are called **re-entrant angles,** and polygons having one or more re-entrant angles are called **concave** or **re-entrant polygons.**

To find the area of a re-entrant polygon, divide it into triangles, as indicated by the dotted lines, find the area of each triangle, and their sum will be the area of the polygon.

Unless otherwise stated, all polygons are supposed to be convex polygons.

REGULAR POLYGONS

81. Except in the case of irregular figures bounded by right lines, most of the polygons that occur in practice are regular polygons.

If, in any regular polygon having an *even* number of sides, a line (diagonal) be drawn from any vertex to the vertex opposite that is farthest away, the line will pass through what is called the **geometrical center** of the polygon; and if two such lines be drawn

from different vertexes, they will intersect in the geometrical center. Thus, in Fig. 42, which represents a hexagon (a polygon with an even number of sides), AD, BE, and CF all intersect in O, which is the geometrical center, or, more simply, the **center,** of the hexagon.

If a regular polygon have an odd number of sides, as the pentagon, Fig. 43, and a perpendicular be drawn from any vertex to the side opposite, it will pass through the geometrical center of the polygon; and any two such perpendiculars will intersect in the center. Thus, AP, BQ, CR, DS, and ET, which are perpendicular respectively to CD DE, EA, AB, and BC, all intersect in O, the center of the pentagon.

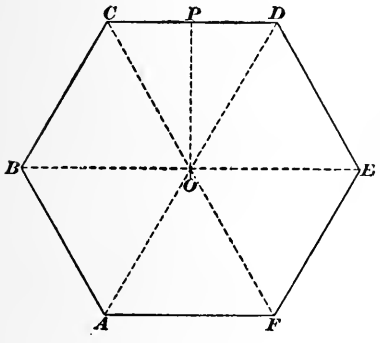

Fig. 42.

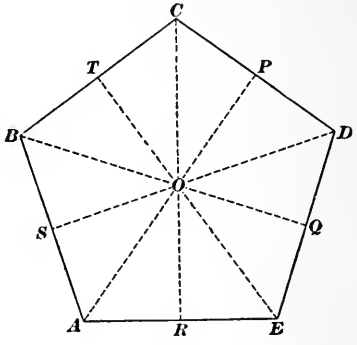

Fig. 43.

The perpendicular from the center to one of the sides, as OP in Figs. 42 and 43, bisects the side; that is, $PC = PD$. This perpendicular is called the **apothem.**

The lines AD, BE, etc., Fig. 42, and AP, BQ, etc., Fig. 43, divide the polygons into as many equal triangles as the polygons have sides and the sum of the areas of these triangles equals the areas of the polygons. The area of one triangle is, letting l = length of one side and a = the apothem, $\frac{1}{2}al$. If n = the number of sides of the polygon, the area, A, of the polygon is $\frac{1}{2}\ anl$. But nl = the perimeter of the polygon = p; hence,

$$A = \tfrac{1}{2}pa. \qquad (1)$$

Stated in words, *the area of any regular polygon is equal to half its perimeter multiplied by its apothem.*

TABLE OF REGULAR POLYGONS

Number of sides	Apothem a	Area k	Number of sides	Apothem a	Area k
3	0.28868	0.43301	15	2.3523	17.642
4	0.5	1.	16	2.5137	20.109
5	0.68819	1.7205	20	3.1569	31.569
6	0.86603	2.5981	24	3.7979	45.575
7	1.0383	3.6339	25	3.9579	49.474
8	1.2071	4.8284	30	4.7572	71.358
9	1.3737	6.1818	32	5.0766	81.225
10	1.5388	7.6942	40	6.3531	127.06
11	1.7028	9.3656	48	7.6285	183.08
12	1.8660	11.196	64	10.178	325.69

The area may also be found by means of the above table when the number of sides in the polygon is given in the table. To use the table, let k = the number in the column headed area that coresponds to the given number of sides; let l = the length of the given side; then,

$$A = kl^2. \qquad (2)$$

For example suppose that the length of a side of a regular octagon is $3\frac{1}{4}$ in., and it is desired to find the area of the octagon. Referring to the table, when the number of sides is 8, $k = 4.8284$; hence, the area is $A = 4.8284 \times 3.25^2 = 51$ sq. in. *Ans.*

EXAMPLE.—One side of a hexagonal bar of iron measures $1\frac{11}{16}$ in.; what is the area of a cross section of the bar?

SOLUTION.—Referring to the table, when the number of sides is 6, $k = 2.5981$; hence, area $= A = 2.5981 \times (1\frac{11}{16})^2 = 7.3985-$, say 7.398 sq. in. *Ans.*

The apothem can be used to lay out the polygon; the manner of doing this will be described later. The apothem as given in the table is for a side equal to 1; hence to find the actual length of the apothem when the length of a side of the polygon is given let l = length of side; then actual length of apothem $= la$. In the last example, the actual length of the apothem is $1\frac{11}{16} \times .86603 = 1.4614$ in.

THE CIRCLE

82. Definition.—The **circle** is a curve every point of which is equally distant from a point within it called the *center*. The

curve shown in Fig. 44 is a circle, O being the center. A circle may be **described** (drawn) in various ways. Thus, with a pin, punch two holes in a strip of heavy paper; put the pin through one hole and the point of a sharp pencil through the other hole; then, keeping the pin stationary, revolve the pencil about the pin, keeping the strip of paper stretched tight, and the pencil will describe a circle. This method is shown in Fig. 45. A better way is to use an instrument employed by draftsmen, called **compasses.** This instrument consists of two legs united at one end by a joint, which permits them to open and close to any desired distance apart. One leg has a needle point at one end,

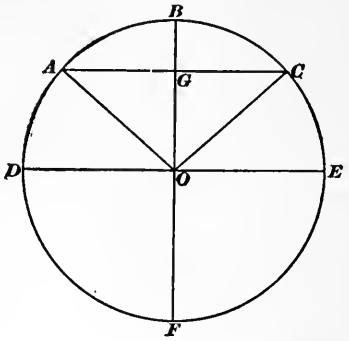

Fig. 44.

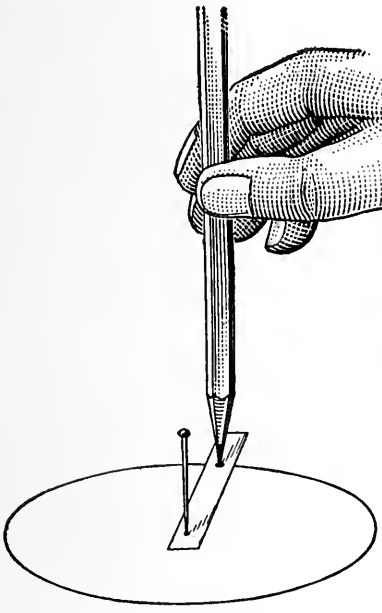

Fig. 45.

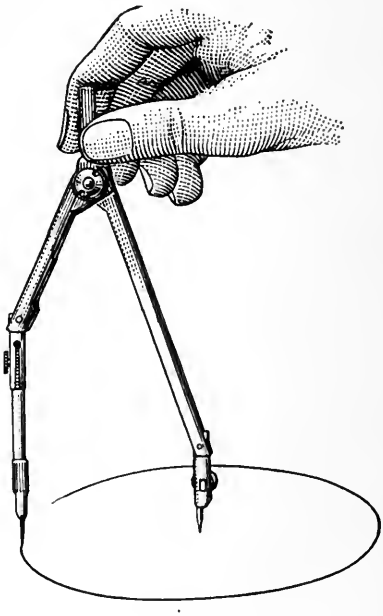

Fig. 46.

and the other leg carries a pencil point or pen. By placing the needle point of the compasses at the center, the leg carrying the

pencil point or pen may be revolved about the needle point, thus describing the circle as shown in Fig. 46.

83. Referring to Fig. 44, any part of a circle, as AD, ABC, etc. is called an **arc** of a circle, a **circular arc,** or simply, an **arc;** it is so called from its shape, the word arc meaning *bow*. A right line joining the extremities of an arc is called the **chord** of the arc or, simply, the **chord.** Thus, AC is the chord of the arc ABC, and DE is the chord of the arc $DABCE$. When the chord passes through the center of the circle, it divides the circle into two equal parts, each of which is called a **semicircle,** meaning half-circle, and the chord is then called a **diameter** of the circle or, simply, a **diameter.** In Fig. 44, DE is a diameter of the circle, because it passes through the center. For the same reason, BF is also a diameter. The arc DBE is equal to the arc DFE, and both are semicircles. The arc FDB is equal to the arc FEB, and both of these arcs are semicircles.

A right line drawn from the center to the curve is called a **radius** of the **circle;** thus, OD, Fig. 44, is a radius, and so is OA, OB, etc. The plural of radius is **radii;** hence, OD, OA, OB, OC, OE, and OF are radii of the circle $DABCEF$. All radii of any circle are equal, by definition of the circle, since they equal the distance from the center to the curve. A radius is also equal to one-half the diameter, since the diameter $DE = OE + OD$, and $OE = OD =$ the radius. Consequently, the diameter equals twice the radius.

The perimeter of a circle is commonly called the **circumference;** in geometry, it is called the **periphery.** The word *periphery* is applied to plane figures having curved outlines, while the word *perimeter* is applied to plane figures bounded by right lines.

84. The word *circle* is also applied to the area contained within the circumference, hence, by *area of a circle,* the area included by the circumference is always meant. The area included by an arc and two radii drawn to the extremities of the arc is called a **sector;** in Fig. 44, the area $OABC$ is a sector of the circle $DBEF$. The area included between an arc and its chord is called a **segment;** the area $ABCA$ is a segment of the circle $DBEF$.

85. If a line be drawn from a point without a circle and is terminated by the circumference after passing through the circle, such a line is called a **secant.** In Fig. 47, PA and PB are secants. Evidently, a secant intersects the circumference in two

points; thus, PA intersects the circumference in A and D, and PB intersects it in B and E. If, however, the secant just touches the circle, intersecting it in only one point, it is called a **tangent;** thus, PC is a tangent, because it intersects the circle in only one point, the point C, which is called the **point of tangency.** PG is also a tangent, and F is the point of tangency.

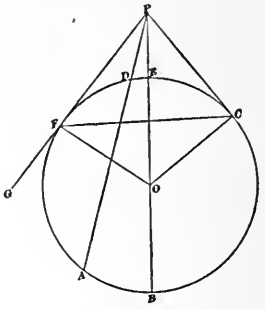

Fig. 47.

86. Some Properties of Circles.—(1) *If a diameter be drawn perpendicular to any chord, it bisects the chord and also the arc.* In Fig. 44, if BF is perpendicular to AC, $AG = GC$, and arc AB = arc BC.

(2) *Any angle whose vertex is the center of the circle is measured by the arc it intercepts;* the word intercept here means the part of the circumference cut off by and included between the radii forming the sides of the angle. In Fig. 44, the angle COE is measured by the arc CE that is intercepted by the radii CO and CE. The angle AOC is measured by the *intercepted arc* ABC; the angle DOA, by the intercepted arc DA; etc It is here understood that the circumference is supposed to be divided into degrees, minutes, and seconds, as described in Art. **54.**

Angles whose vertexes are situated at the center of the circle are called **central angles** or **angles at the center.**

(3) Since central angles are measured by the arcs they intercept, it is evident that a diameter perpendicular to the chord of the arc bisects the central angle that is measured by that arc. Thus, by (1), if the diameter BF is perpendicular to AC, arc AB = arc BC, and $AOB = BOC$, since both angles are measured by equal arcs.

(4) *If a right line be drawn perpendicular to any chord at its middle point, it will pass through the center of the circle having the same arc that is subtended by the chord.* In Fig. 44, the arc ABC is **subtended** by the chord AC. If G is the middle point of the chord and BGF is perpendicular to AC, then BGF must pass through the center O of the circle $DBEF$ of which the arc ABC is a part.

(5) *Two circles are equal when the radius or diameter of one is equal to the radius or diameter of the other; two sectors are equal when the radius and chord of one are equal to the radius and chord*

of the other; and two segments or two arcs are equal when the radius and chord of one are equal to the radius and chord of the other.

(6) *If the vertex of an angle lies on the circumference, the angle is measured by one-half the intercepted arc.* In Fig. 48, the vertex of BAC lies on the circumference; it is therefore measured by one-half the arc BC. Angles whose vertexes lie on the circumference

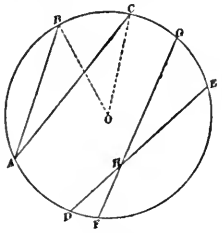

Fig. 48.

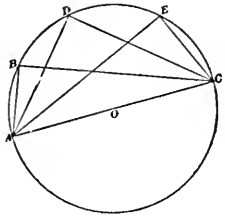

Fig. 49.

are called **inscribed angles**; hence, an inscribed angle is one-half as large as the central angle having the same arc. Thus, $BAC = \frac{1}{2}\ BOC$, and $BOC = 2\ BAC$.

(7) *If the inscribed angle intercepts a semicircle, the angle is a right angle,* since a semicircle contains $360° \div 2 = 180°$, and one-half of 180° is 90°, a right angle. Thus, in Fig. 49, if AC is a diameter, ABC, ADC, and AEC are all right angles. Hence,

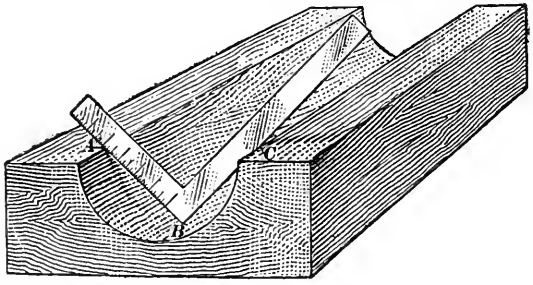

Fig. 50.

any angle inscribed in a semicircle is a right angle. This fact is made use of by mechanics to test the roundness of a semicircular hole, as shown in Fig. 50. Here a square is laid across the edges, and is then rotated back and forth. If the sides of the square just touch the edges and the point of the square just touches the bottom, the surface touched is semicircular, since, as shown in

the figure, ABC is a semicircle and the angle ABC inscribed in it is a right angle.

(8) If two chords intersect in a point within a circle, as DE and FG, Fig. 48, which intersect in H, the angle GHE, which equals DHF, is measured by one-half the *sum* of the arcs intercepted by these equal angles; that is, GHE (or DHF) is measured by one-half of arc GE + arc DF.

(9) If two secants are drawn from the same point, the angle between the secants is measured by one-half the *difference* of the arcs they intercept. In Fig. 47, APB is measured by one-half of arc AB − arc DE.

(10) The angle between a secant and a tangent drawn from the same point, also the angle between two tangents drawn from the same point, is measured by one-half the difference of the intercepted arcs. In Fig. 47, the angle APF is measured by one-half of arc AF − arc FD, and angle FPC is measured by one-half arc of FBC − arc FEC.

(11) *The radius drawn to the point of tangency is perpendicular to the tangent.* In Fig. 47, if C and F are points of tangency, OC is perpendicular to PC and OF is perpendicular to PF.

(12) If two circles intersect, the line passing through their centers is perpendicular to their common chord and bisects the chord. In Fig. 51, two circles having the centers O and O' intersect; AB is their common chord, drawn through the points of intersection; then, the right line passing through the centers O and O' is perpendicular to AB and bisects AB. The circles whose centers are O and O'' also intersect, their common chord being CD. Then, the right line passing through O and O'' is perpendicular to CD and bisects CD. In the first case, the center of the second circle is outside the circumference of the first; but,

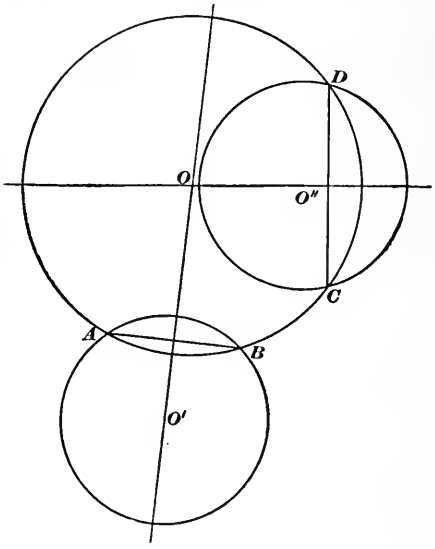

Fig. 51.

in the second case, the center of the second circle is within the circumference of the first.

(**13**) From a given point without a circle, two tangents may be drawn to the circle, as PF and PC in Fig. 47. If from the given point, a secant be drawn passing through the center, it bisects the angle formed by the two tangents and is perpendicular to the chord joining the points of tangency. In Fig. 47, if F and C are the points of tangency of the tangents drawn from P, and PB is a secant passing through the center O, then $OPF = OPC = \frac{1}{2}FPC$, and PB bisects the chord FC. PB is also perpendicular to FC. It is evident, also, that PB bisects the central angle FOC.

87. Three Important Principles.—(1) *If any two chords of a circle intersect, the product of the segments of one line is equal to the product of the segments of the other line,* the segments being determined by the point of intersection. In Fig. 52, the chords AB and CD intersect in the point M; then, $AM \times MB = CM \times MD$. The chords AB and JK intersect in the point N; then, $AN \times NB = JN \times NK$.

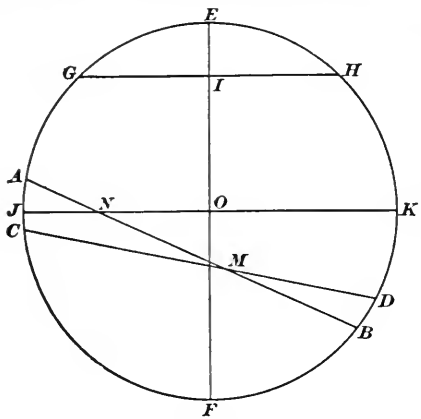

FIG. 52.

If EF is a diameter perpendicular to the chord GH, $IG = IH$, according to (1), Art. **86**, and $IE \times IF = IG \times IH = IG^2 = IH^2$; that is, a diameter perpendicular to a chord is divided by the chord into two segments whose product is equal to the square of half the chord. The segment included between the chord and the arc is called the **height** of the arc or height of the segment; hence if the chord and height of the arc are known, the diameter or radius can be found. For, let c = the chord GH, h = the height IE, and d = the diameter; then $IF = d - h$, $IG = \frac{c}{2}$, and $h\,(d - h) = \left(\frac{c}{2}\right)^2$; from which, $hd - h^2 = \frac{c^2}{4}$, or

$$d = \frac{c^2 + 4h^2}{4h} \qquad (1)$$

Representing the radius by r, $r = \frac{d}{2}$, and

$$r = \frac{c^2 + 4h^2}{8h}. \qquad (2)$$

If r and c are known and it is desired to find h, it may be found from formula (2), its value being

$$h = r \pm \tfrac{1}{2}\sqrt{4r^2 - c^2}$$

When h is less than r, the minus sign is used, and

$$h = r - \tfrac{1}{2}\sqrt{4r^2 - c^2} \qquad (3)$$

When h is greater than r, the plus sign is used, and

$$h = r + \tfrac{1}{2}\sqrt{4r^2 - c^2} \qquad (4)$$

If r and h are given and c is desired,

$$c = 2\sqrt{(2r - h)h} \qquad (5)$$

(2) *If from a point without a circle two secants are drawn, the product of the whole secant and the external segment of one line is equal to the product of the whole secant and the external segment of the other line.* In Fig. 53, PA and PB are secants drawn from the point P; EP and FP are the external segments; then, $PA \times PE = PB \times PF$.

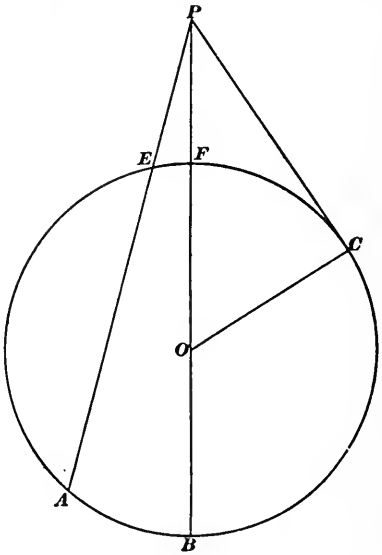

Fig. 53.

(3) *If from a point without a circle a secant and a tangent are drawn, the product of the whole secant and its external segment is equal to the square of the tangent.* In Fig. 53, let PA be any secant and PC a tangent, both drawn from P; then, $PA \times PE = PC^2$. In order to measure PC, it is necessary to know the point of tangency C; and this can be found by drawing from the center O a perpendicular to PC, the point where it intersects PC being the point of tangency.

Example.—The chord of an arc has a length of 14⅞ in.; the height of the arc is 3¼ in.; what is the radius?

SOLUTION.—Applying formula (2), $c = 14.875$, $h = 3.25$, and

$$r = \frac{14.875^2 + 4 \times 3.25^2}{8 \times 3.25} = 10.135+ \text{ in.} \quad \textit{Ans.}$$

88. It is sometimes desirable to know the chord and height of half the arc when the chord and height of the whole arc are given. In such a case, formulas may be found as follows:

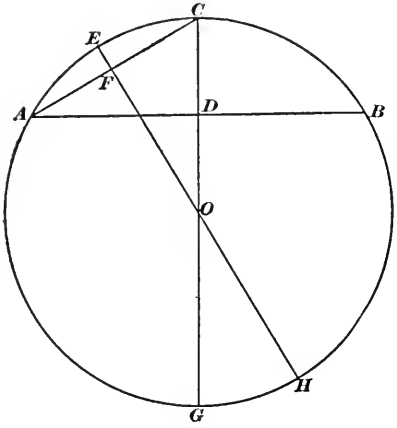

FIG. 54.

Referring to Fig. 54, let $C = AB$ and $H = CD$, the chord and height of the arc ACB; let $c = AC$ and $h = EF$, the chord and height of the arc AC = half the arc ACB; and let r = the radius of the arc ACB. In the right triangle ADC, $AC^2 = AD^2 + CD^2$, or $c^2 = \left(\frac{C}{2}\right)^2 + H^2 = \frac{C^2 + 4H^2}{4}$. Multiplying and dividing this fraction by $2H$, which of course does not alter its value, the result is $\frac{2H(C^2 + 4H^2)}{8H}$ $= 2rH$, since by formula (2), Art. **87**, $r = \frac{C^2 + 4H^2}{8H}$. Therefore, $c^2 = 2rH$, and

$$c = \sqrt{2rH} \qquad (1)$$

To find h, $EF \times FH = AF^2$, or $h(2r - h) = \left(\frac{c}{2}\right)^2 = \frac{c^2}{4}$, since $FH = 2r - h$. But $c^2 = 2rH$; hence, $h(2r - h) = \frac{2rH}{4} = \frac{rH}{2}$, and $2rh - h^2 = \frac{rH}{2}$. Dividing both members of this equation by -1, to change the sign of h^2,

$$h^2 - 2rh = -\frac{rH}{2}.$$

Solving this equation by the regular rule for quadratics (Art. **31**)

$$h = \frac{2r \pm \sqrt{(2r)^2 + 4 \times 1 \times -\frac{rH}{2}}}{2 \times 1} = r \pm \sqrt{r^2 - \frac{rH}{2}}$$

$$= r \pm \sqrt{r\left(r - \frac{H}{2}\right)}. \qquad (2)$$

To apply either of these formulas, it is first necessary to calculate the radius.

EXAMPLE.—Referring to the example in Art. 87, find the chord and height of half the arc.

SOLUTION.—The chord $AB = 14.875$ in., the height $CD = 3.25$, from which the radius was found to be 10.135 in. By formula (1), the chord of half the arc $= c = \sqrt{2 \times 10.135 \times 3.25} = 8.1165-$, say 8.116 in. *Ans.*

By formula (2), $h = 10.135 \pm \sqrt{10.135^2 - \frac{10.135 \times 3.25}{2}} = 10.135 + 9.287 = 19.422$ in.; or, $10.135 - 9.287 = .848$ in. The smaller value is evidently the one required in this case; hence, $h = .848$ in. *Ans.*

It may be remarked that the smaller of the two values just obtained is the length of EF, while the larger value is the length FH; the sum of these two lengths is $19.422 + .848 = 20.270 = EH = 2r = 2 \times 10.135 = 20.270$.

89. Circumference and Area of the Circle.—The circumference of a circle is equal to the diameter multiplied by a number that is universally represented by the Greek letter π (pronounced pi or pe). This number has been calculated to 707 decimal places, and it has been proven that it cannot be expressed by a finite number of figures; its value to 9 significant figures is 3.14159265 +, and is usually expressed as 3.1416; for rough calculations, $3\frac{1}{7} = \frac{22}{7}$ is commonly used for π. Letting c = the circumference, d = the diameter, and A = the area,

$$c = \pi d = 3.1416\, d \qquad (1)$$

Since the diameter equals twice the radius,

$$c = 2\pi r \qquad (2)$$

The area of a circle is equal to π times the square of the radius, or

$$A = \pi r^2 \qquad (3)$$

Since $r = \frac{d}{2}$, $A = \pi\left(\frac{d}{2}\right)^2 = \frac{1}{4}\pi d^2 = .7854 d^2 \qquad (4)$

These four formulas are extremely important; they should be carefully committed to memory.

From formula (1),

$$d = \frac{c}{\pi} = \frac{c}{3.1416} = .31831c \qquad (5)$$

From formula (2),

$$r = \frac{c}{2\pi} = .159155c \qquad (6)$$

From formula (3),

$$r = \sqrt{\frac{A}{\pi}} = .56419\sqrt{A} \qquad (7)$$

From formula (5),

$$d = \sqrt{\frac{4A}{\pi}} = 1.1284\sqrt{A} \qquad (8)$$

Formulas (5) to (8) may be used to calculate the radius or diameter when the circumference or area is known; as a rule, however, these formulas are not used, formulas (1) to (4) being preferred.

EXAMPLE 1.—A pulley has a diameter of 32 in. and makes 175 revolutions per minute; how fast does a point on the rim travel in feet per minute?

SOLUTION.—When the pulley has turned around once, the point will have traveled a distance equal to the circumference of the pulley, and since the pulley turns 175 times in one minute, the point will travel 175 times the circumference of the pulley in one minute. Consequently, the distance traveled by the point in one minute is $\pi d \times 175 = 3.1416 \times 32 \times 175 = 17592.96$ in. = 1466.08 ft., say 1466 ft. Hence, the speed of the pulley is 1466 ft. per min. *Ans.*

EXAMPLE 2.—Suppose the speed of a belt is 3160 feet per minute and that it drives a pulley that makes 330 revolutions per minute; what is the diameter of the pulley?

SOLUTION.—The speed of a point on the circumference of the pulley is the same as the speed of the belt, assuming that there is no slipping of the belt. Consequently, as shown in example (1),

$$\pi d \times 330 = 3160 \text{ ft.} = 37920 \text{ in., or}$$

$$d = \frac{37920}{330\pi} = 36.5766 = 36\tfrac{37}{64} \text{ in., very nearly.} \quad \textit{Ans.}$$

EXAMPLE 3.—The piston of a steam engine has a diameter of 16 in.; what is the area of the piston surface touched by the steam?

SOLUTION.—The area touched by the steam is evidently the area of a circle having a diameter of 16 in. By formula (4), the area is

$$A = .7854 \times 16^2 = 201.0624, \text{ say } 201 \text{ sq. in.} \quad \textit{Ans.}$$

EXAMPLE 4.—It is desired to bore a hole that shall have an area of 10 sq. in.; what must be the diameter of the hole?

SOLUTION.—Either formula (4) or (8) may be used, but formula (8) is rather easier to apply; using it, therefore,

$$d = 1.1284\sqrt{10} = 3.5683, \text{ say } 3.568 \text{ in.} \quad \textit{Ans.}$$

EXAMPLE 5.—The circumference of a flywheel was measured with a tape line and found to be 35 ft. 10¼ in. What is its diameter to the nearest one-eighth inch?

SOLUTION.—Either formula (1) or (5) may be used. If (1) be used, it will be necessary to divide the circumference by 3.1416, while if (5) be used, the circumference may be multiplied by .31831. Since most computers

would rather multiply than divide, use formula (5). Reducing the feet to inches, 35 ft. 10.25 in. = 430.25 in. Then,

$d = .31831 \times 430.25 = 136.953$ in. = 11 ft. 5 in. to the nearest one-eighth inch. *Ans.*

Example 6.—When no ambiguity (confusion) is likely, a circle may be designated by referring to its centers only. Fig. 55 shows two pulleys, O and O', driven by a belt. Suppose the diameter of O is 48 in. and it makes 220 revolutions per minute. It is desired to have pulley O' make 450 revolutions per minute; what must be the diameter of O'?

Solution.—Let N and n be the number of revolutions per minute made by O and O', respectively, O being the larger and O' the smaller pulley; let D and d be the respective diameters of O and O'. The speed of the belt

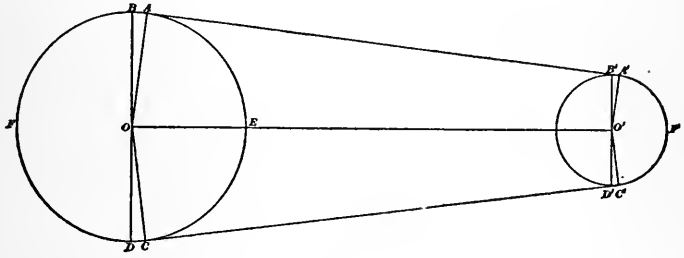

Fig. 55.

in feet per minute is equal to the circumference of O in feet multiplied by the number of times it turns in one minute; hence, if the diameters of the pulleys are given in inches, the speed of the belt is $\frac{\pi DN}{12}$. The speed of the belt is also equal to the circumference in feet of O' multiplied by the number of times it turns in one minute; that is, it equals $\frac{\pi dn}{12}$. Therefore, $\frac{\pi DN}{12} = \frac{\pi dn}{12}$. Dividing both members of this equation by $\frac{\pi}{12}$,

$$DN = dn \qquad (9)$$

In words, the product of the diameter and number of revolutions of one pulley is equal to the product of the diameter and number of revolutions made in the same time by the other pulley. Provided the unit used to measure D and d is the same, it is immaterial what unit is used; that is, the diameters may be stated in feet, inches, millimeters, etc.

Applying the formula to the present case,

$$48 \times 220 = d \times 450$$

from which $d = \frac{48 \times 220}{450} = 22.4\frac{2}{3}$ in. $= 23\frac{1}{3}\frac{5}{2}$ in. very nearly.

The diameter of d must be in inches because the diameter of D is in inches, and both diameters must be measured in the same unit. Formula (9) is very important in connection with calculations pertaining to pulleys and belts, and should be carefully memorized.

90. Length of Open Belt.—When the belt passes over the pulleys without crossing the line $O'O$ joining the centers, as in Fig. 55, it is called an **open belt.** Knowing the distance $O'O$ between the centers and the diameters of the pulleys, it is frequently desired to know the length of the belt. There is no simple, exact formula that will give the length of the belt, but the formula given below is sufficiently exact for all practical purposes. The lines $A'A$ and $C'C$ are tangent to the pulleys (circles) O and O'. Drawing the radii OA and OC, A and C are the points of tangency. Drawing the radii $O'A'$ and $O'C'$, A' and C' are points of tangency. Draw diameters BD and $B'D'$ perpendicular to $O'O$; then the angles AOB and COD are equal, since the tangents $A'A$ and $C'C$ must intersect in some point, say P (not shown here), and by (**13**) of Art. **86,** arc AE = arc CE; but arc $AB = 90° -$ arc $AE = 90° -$ arc $EC = DC$, and $AOB = COD$. Since, $O'B'$ is parallel to OB and $O'A'$ is parallel to OA, $B'O'A' = BOA$. For the same reason, $C'O'D' = COD$, and all four angles are equal. The radii of the arcs $B'A'$ and BA *are* not equal, and the length of the arc AB is not equal to the length of the arc $A'B'$. Let L = the length of the belt, and let C = the distance $O'O$ between the centers; then it is evident that the length of the belt is $L = 2 \times A'A +$ semicircle $BFD + 2 \times$ arc $BA +$ semicircle $B'F'D' - 2 \times$ arc $B'A'$. The difficulty arises in finding an expression for the lengths of the arcs BA and $B'A'$. Using the same letters as before, the following formula is sufficiently exact for all practical purposes:

$$L = 2C + \frac{\pi}{2}(D + d) + \frac{(D - d)^2}{4C} \qquad (1)$$

When using this formula, C, D, and d must all be measured in the same unit. If it is desired to measure L and C in feet and D and d in inches, the formula then reduces to

$$L = 2C' + .1309(D'' + d'') + \frac{(D'' - d'')^2}{576C'} \qquad (2)$$

by substituting $D'' = \frac{D}{12}$ and $d'' = \frac{d}{12}$ for D and d, respectively. In formula (2), C' means C feet, and D'' and d'' mean D inches, and d inches.

Example.—What length of belt is required when the pulleys have diameters of 56 in. and 16 in. and the distance between the centers is 24 ft. 3 in.?

Solution.—Substituting in formula (2) the value 24.25 = 24 ft. 3 in., for C; $L = 2 \times 24.25 + .1309(56 + 16) + \frac{(56 - 16)^2}{576 \times 24.25} = 58.04-$ ft. *Ans.*

Since .04 ft. = .48 in. say ½ in., the length of the belt may be taken as 58 ft. ½ in.

91. Length of Crossed Belt.—When the belt passes over the pulleys so as to cross the line $O'O$ joining the centers, as in Fig. 56, it is called a **crossed belt.** A and C are the points of tangency for the pulley O and A' and C' are the points of tangency for the pulley O'. As in the case of the open belt, the angles AOB, COD, $A'O'B'$, and $C'O'D'$ are all equal. The length of the belt is $L = 2 \times A'A +$ semicircle $BFD + 2 \times$ arc $AB +$ semicircle

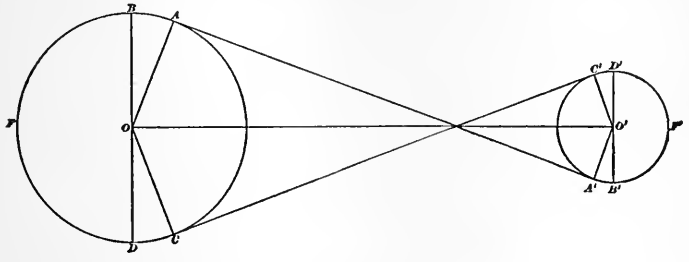

Fig. 56.

$B'F'D' + 2 \times$ arc $A'B'$. As with the open belt, there is no simple formula giving an exact value for L, but the following is sufficiently exact for all practical purpose:

$$L = 2C + \frac{\pi}{2}(D + d) + \frac{(D + d)^2}{4C} \qquad (1)$$

Or,

$$L = 2C' + .1309(D'' + d'') + \frac{(D'' + d'')^2}{576C'} \qquad (2)$$

The letters in these formulas have the same values as in the formulas of Art. **90.** It will be noted that the only difference between these formulas and those of Art. **90** is the sign of d in the last term.

Example.—Using the same values as in the example of Art. **90,** find the length of a crossed belt.

Solution.—Substituting the values given in formula (2),

$L = 2 \times 24.25 + .1309(56 + 16) + \frac{(56 + 16)^2}{576 \times 24.25} = 58.296-$ ft. $= 58$ ft. $4\frac{3}{4}$ in., very nearly. *Ans.* It will be noted that the length of the crossed belt, in this case, is $4\frac{3}{4} - \frac{1}{2} = 4\frac{1}{4}$ in. longer than the open belt.

92. Concentric and Eccentric Circles.—Two or more circles are said to be **concentric** when they have the same center. In Fig. 57, the circles ABC and $A'B'C'$ have the same center O; they are, therefore, concentric circles. The distance $A'A$

$= B'B = C'C$, each distance being that part of the radius included between the circles.

If one circle lies within another, but does not have the same center, the circles are said to be **eccentric.** In Fig. 58, the center of the larger circle is O, and the center of the smaller circle is O'; hence, these circles are eccentric circles.

If, in Figs. 57 and 58, the small circle represents a hole, the area of the space included between the hole and the large circle

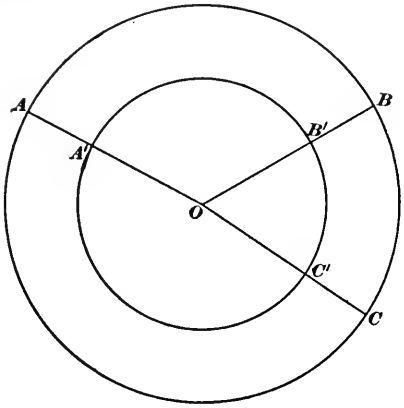

Fig. 57.

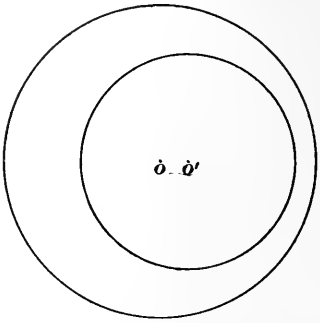

Fig. 58.

is evidently equal to the area of the large circle less the area of the small circle. Let D = diameter of the large circle, usually called the *outside diameter*, and let d = the diameter of the small circle, usually called the *inside diameter;* then area of large circle is $\frac{\pi}{4}D^2$ and area of small circle is $\frac{\pi}{4}d^2$. The area of the flat surface in either Fig. 57 or Fig. 58 is:

$$A = \frac{\pi}{4}D^2 - \frac{\pi}{4}d^2 = \frac{\pi}{4}(D^2 - d^2). \qquad (1)$$

If the radius is used instead of the diameter,

$$A = \pi(R^2 - r^2), \qquad (2)$$

in which R is the radius of the outer circle and r is the radius of the inner circle.

Example.—A circular disk has a hole through it that is $7\frac{1}{8}$ in. in diameter. The outside diameter is $10\frac{1}{4}$ in. What is the area of the flat surface?

Solution.—Applying formula (1), remembering that $\frac{\pi}{4} = .7854$.

$A = .7854\ (10.25^2 - 7.125^2) = 42.645 -$, say 42.64 sq. in. *Ans.*

EXAMPLES

(1) It is desired to bore a hole that shall have an area of exactly 2 sq. in.; what must be its diameter? *Ans.* 1.596− in.

(2) The diameter of a rod is $4\frac{3}{4}$ in.; what is its circumference? *Ans.* $14\frac{59}{64}$ in.

(2) A pulley 19 in. in diameter and making 350 revolutions per minute drives a pulley 8 in. in diameter; how many revolutions per minute does the smaller pulley make? *Ans.* $831\frac{1}{4}$ r.p.m.

(4) The outside diameter of a cross-section of a cylinder is 27 in., the inside diameter is 25 in.; what is the area of the cross-section? *Ans.* 81.68 + sq. in.

(5) The circumference of a shaft is $22\frac{3}{8}$ in.; what is its diameter? *Ans.* $7\frac{1}{8}$ in. nearly.

(6) Two pulleys having diameters of 80 in. and 20 in. are 22 ft. 6 in. between centers; what length of open belt is required to connect these pulleys? *Ans.* 58 ft. $4\frac{7}{16}$ in.

(7) Two pulleys that are 9 ft. 2 in. between centers are connected by a crossed belt; the diameters of the pulleys being 18 in. and 12 in., what is the length of the belt? *Ans.* 22 ft. $5\frac{3}{16}$ in.

SECTORS AND SEGMENTS

93. Circular Measure of Angles.—Instead of measuring an angle in degrees, minutes, and seconds, it may be measured by means of its arc expressed in terms of its radius. For instance, referring to Fig. 59, angle AOB = angle DOE. The number of degrees in the angle DOE is to the number of degrees in the semicircle $GDEH$ as arc DFE is to arc GFH. Letting v = angle DOE, $v° : 180° = \text{arc } DFE : \pi r$, r being the radius OD and πr being $\frac{1}{2} \times 2\pi r$ = length of arc of semicircle. From this proportion, $v° = \dfrac{180° \times \text{arc } DFE}{\pi r} = 57.296° \times \dfrac{\text{arc } DFE}{r} = 57.296° \times \dfrac{\text{arc } ACB}{R}$, when R = radius OA of arc ACB. Now suppose that the arc DFE = the radius r, then the arc ACB must equal the radius R, and $v° = 57.296° \times \dfrac{r}{r} = 57.296° \times \dfrac{R}{R} = 57.296°$;

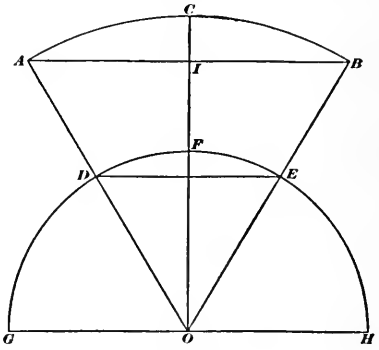

Fig. 59.

that is, *an arc of* 57.296° *is equal in length to the radius of the arc.* Taking this arc as the unit of measure, in which case, it is called a **radian,** a semicircle is equal to $\frac{180°}{57.296°} = 3.1416 = \pi$ radians; a quadrant, or 90°, is half a semicircle and is equal to $\frac{1}{2}\pi = \frac{\pi}{2}$ = 1.5708 radians; any other angle, as ABC, will be equal to the number of degrees in the angle divided by 57.296. An angle measured in this manner is said to be measured in *radians* or to be measured in **circular measure.** When an angle is expressed in degrees, it is said to be measured in *angular measure.*

From the equation $v° = 57.296° \frac{\text{arc } DFE}{r}$, DFE being any arc and r its radius,

$$\frac{\text{arc } DFE}{r} = \frac{v°}{57.296°} = \text{angle } DFE \text{ in radians;}$$

in other words, *if the length of an arc be divided by its radius, the quotient will be the measure of the angle in radians.* Let θ (Greek letter, pronounced theta) be the angle in radians, let l = length of the arc, and r = the radius of the arc, then the last equation may be written

$$\frac{l}{r} = \theta \qquad (1)$$

From (1),

$$l = r\theta \qquad (2)$$

If an angle be expressed in radians, and it be desired to find its equivalent in angular measure, let v be the angle in degrees; then, since $\frac{v°}{57.296°} = \theta$,

$$v° = 57.296°\theta. \qquad (3)$$

If the angle is given in angular measure, and it is desired to express it in radians,

$$\theta = \frac{v}{57.296} = .0174533v° \qquad (4)$$

Example 1.—The length of an arc is 23⅝ in. and the radius of the arc is 32 in.; what is the angle in radians, and what is the angle in angular measure?

Solution.—From formula (1), $\theta = \frac{23.625}{32} = .73828$ radians. *Ans.*

From formula (3), $v = 57.296 \times .73828 = 42.3005° = 42° 18' 1.8''$. *Ans.*

Example 2.—A certain angle is equal to 21° 31′ 26″; if the radius of an arc having this angle is 15½ in., what is the length of the arc?

Solution.—Reducing the minutes and seconds to a decimal of a degree, 21° 31′ 26″ = 21.5239°. By formula (4), $\theta = .0174533 \times 21.5239$; by formula (2), $l = r\theta = 15.5 \times .0174533 \times 21.5239 = 5.823-$ in. *Ans.*

94. Length of Circular Arc.—Referring to formula (1), Art. **93,** if r is equal to the unit of linear measure (1 foot, 1 inch, etc.), $\theta = \frac{l}{1} = l$; in other words, *the measure of an angle in radians is the length of the arc to a radius l.* Thus, in Fig. 59, if $OD = OE = 1$ inch, and θ is the circular measure of the angle $AOB = v$, the arc $DFE = \theta$ inches. Further, if $OA = r$, the length of the arc $ACB = r \times \theta$ in. $= r\theta$ in.

As previously defined, the figure $OACB$ is a sector. By means of the formulas and principles of Art. **93,** the length of the arc ACB of any sector can be found when the radius and the central angle (in either angular or circular measure) are known. If the chord AB and the height CI of the arc ACB are given, there is no simple, exact formula for finding the length of the arc ACB, in such cases, the angle AOB would usually be found by means of a table of trigonometric functions; then, knowing the angle, the length l of the arc can be found the formula

$$l = r\theta = .0174533rv \qquad (1)$$

If, however, a table of trigonometric functions is not available or if it is not desired to use such a table, the following formula will give results sufficiently exact for all practical purposes

$$l = \frac{40rt(15 + 16t^2)}{75 + 180t^2 + 64t^6} \qquad (2)$$

in which $t = \frac{h}{c} = \frac{\text{height of arc}}{\text{chord of arc}}$ and r = the radius.

To apply the formula, first calculate the value of t; if r is not given, calculate it by formula (2), Art. **87.**

If the angle is not greater than a right angle, or 90°, the term $64t^6$ may be omitted, and the formula then becomes

$$l = \frac{40rt(15 + 16t^2)}{75 + 180t^2} = \frac{8rt(15 + 16t^2)}{15 + 36t^2} \qquad (3)$$

When the angle is equal to 90°, $\frac{h}{c} = t = \frac{\sqrt{2} - 1}{2} = .207107$; hence, if the value of t equals or exceeds .21, use formula (2); but if t is less than .21, formula (3) may be used.

EXAMPLE 1.—What is the length of an arc whose chord is $7\frac{5}{16}$ in. and whose height is $2\frac{11}{32}$ in.?

SOLUTION.—Since $t = 2\frac{11}{32} \div 7\frac{5}{16} = \frac{75}{32} \div \frac{117}{16} = \frac{75}{32} \times \frac{16}{117} = \frac{75}{234} = .320513$ is greater than .21, use formula (2). By formula (2), Art. **87,**

$$r = \frac{(7\frac{5}{16})^2 + 4(2\frac{11}{32})^2}{8 \times 2\frac{11}{32}} = 4.02375 \text{ in.}$$

Substituting in formula (2),

$$l = \frac{40 \times 4.02375 \times .320513(15 + 16 \times .320513^2)}{75 + 180 \times .320513^2 + 64 \times .320513^6} = 9.177 \text{ in.} \quad \textit{Ans.}$$

The correct value of l to 5 significant figures is 9.1748 + in.; hence, the value as calculated is sufficiently exact for practical purposes.

EXAMPLE 2.—If the radius of the arc is 54 in. and the height of the arc is $8\frac{1}{2}$ in., what is the length of the arc and what is the central angle?

SOLUTION.—Referring to Fig. 59, suppose ACB is the given arc, and let OC be perpendicular to the chord AB; then $AI = \frac{c}{2}$ and $CI = h$. In the right triangle AIO, $OI = r - h$ and $OA = r$. Therefore, $\frac{c}{2} = \sqrt{r^2 - (r-h)^2}$ $= \sqrt{54^2 - (54 - 8.5)^2} = 29.0818$ in., and $c = 29.0818 \times 2 = 58.1636$ in. Consequently, $t = \frac{8.5}{58.164} = .14614$. Since t is less than .21, formula (3) may be used, and

$$l = \frac{8 \times 54 \times .14614(15 + 16 \times .14614^2)}{15 + 36 \times .14614^2} = 61.422 \text{ in.} \quad \textit{Ans.}$$

The correct value of l to 5 significant figures is 61.422 in.

From formulas (1) and (3), Art. **93**, $\theta = \frac{l}{r}$, and $v = 57.296\theta = 57.296\frac{l}{r}$ $= 57.296 \times \frac{61.422}{54} = 65.171° - = 65°\ 10'\ 15.6''$. *Ans.*

The exact value is 65° 10′ 14.6″; hence, the error is only 1 second, which is too small to be considered in ordinary practice.

If the angle is large, that is, if it is greater than 90°, and great accuracy is desired, it will be better to find the ratio of the chord and height of half the arc, which may be designated by t'; then substituting t' for t in formula (3), the length of half the arc will be found very closely. By means of formula (1), Art. **87**, and formulas (1) and (2), Art. **88**, the value of $t' = \frac{h}{c}$ for half the arc can be shown to be

$$t' = \frac{\sqrt{8rh} \pm c}{4h} \qquad (4)$$

Or,

$$t' = \frac{\sqrt{c^2 + 4h^2} \pm c}{4h} \qquad (5)$$

Having found t', the length of the whole arc will then be given by the formula,

$$l = \frac{16rt'(15 + 16t'^2)}{15 + 36t'^2} \qquad (6)$$

Referring to the first of the two preceding examples,

$$t' = \frac{\sqrt{(7\frac{5}{16})^2 + 4(2\frac{1}{32})^2} - 7\frac{5}{16}}{4 \times 2\frac{11}{16}} = .14650 -$$

Substituting this value of t' in formula (6), $l = 9.1749 +$ in.

95. Area of Sector and Segment.—*The area of any sector of a circle is equal to one-half the product of its radius and arc.* Let l = the length of the arc and r = the radius, then

$$A = \tfrac{1}{2}rl. \qquad (1)$$

It will be noted that this formula is the same as for the area of a triangle when l = the base and r = the altitude.

Since $l = r\theta$, substitute $r\theta$ for l in (1), and

$$A = \tfrac{1}{2}r^2\theta \qquad (2)$$

that is, *the area of a sector is equal to one-half the product of the angle in radians and the square of the radius.*

Referring to Fig. 59, the segment $ACBA$ = sector $OACB$ − triangle OAB. Area of triangle $OAB = \frac{1}{2} \times AB \times OI$; but AB is the chord of the arc $ACB = c$, and OI = radius OC − minus height of arc $= r - h$. Consequently, area of segment is $A = \frac{1}{2}rl - \frac{1}{2}c(r - h)$, or

$$A = \frac{rl - c(r - h)}{2} = \frac{r^2\theta - c(r - h)}{2} \qquad (3)$$

Another formula for finding the area of a segment (approximately) is the following, in which D is the diameter;

$$A = \frac{4h^2}{3}\sqrt{\frac{D}{h} - .608} \qquad (4)$$

This formula will give results sufficiently accurate for most practical purposes, and is rather easier to apply than (3), when it is necessary to calculate both the highest h and the angle θ of the arc.

EXAMPLE.—Fig. 60 represents a round tank having an inside diameter of 60 in. The tank lies on a flat surface and is filled with water to a depth of 42 in. If the ends of the tank are flat and the tank is 12 ft. long, how many gallons of water are in the tank?

SOLUTION.—The volume of the water is equal to the area of the segment AGB multiplied by the length of the tank. To find the length of the arc AGB, calculate the length of the arc AFB and subtract it from the circumference of the circle $AFBG$. The height of the arc AFB is $h = 60 - 42 = 18$ in. To find the chord AB, apply principle (1), Art. **87**, and $(\frac{c}{2})^2 = FH \times HG = 18 \times 42 = 756$; from which, $c = \sqrt{3024} = 54.991$ in. Then, since $\frac{h}{c} = \frac{18}{54.991} = .327326$, use formula (**2**), Art. **94**, and

$$l = \frac{40 \times 30 \times .327326(15 + 16 \times .327326^2)}{75 + 180 \times .327326^2 + 64 \times .327326^6} = 69.573 \text{ in.}$$

The circumference of the circle is $3.1416 \times 60 = 188.496$ in., and the length of the arc AGB is $188.496 - 69.573 = 118.923$ in. The area of the

segment AGB is evidently equal to the area of the sector $AGBO$ *plus* the area of the triangle AOB; area of sector $= \frac{1}{2} \times 30 \times 118.923 = 1783.845$ sq. in.; area of triangle $= \frac{1}{2} \times 54.991 \times (30 - 18) = 329.946$ sq. in.; and area of segment $= 1783.845 + 329.946 = 2113.791$ sq. in. The length of the tank is 12 ft. $= 144$ in.; hence, the volume of the water is $2113.791 \times 144 = 304385.9$ cu. in. Since one gallon contains 231 cu. in., the number of gallons in the tank is $304385.9 \div 231 = 1317.7-$, say 1318 gallons. *Ans.*

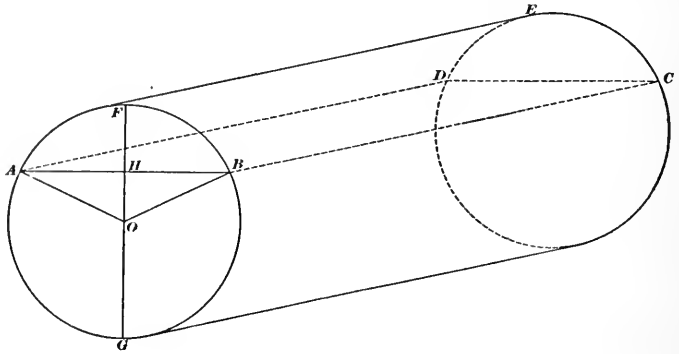

Fig. 60.

The area of the segment might have been found by finding the area of the small segment AFB and subtracting it from the area of the circle. The flat surface $ABCD$ represents the water level.

96. Area of Fillet.—When two solids intersect so as to form a square corner, as shown in Fig. 61, the strength of the piece can be greatly increased by rounding the corner. This is usually done by striking an arc of a circle having a small radius. The curved part thus added is called a **fillet.** While fillets add somewhat to the weight of the piece, it is customary to neglect this in the case of heavy castings; but if an accurate estimate of the weight is desired, it is necessary to include the weight of the fillets. Referring to Fig. 61, ACB is a fillet, and it is assumed that the sides AC and BC form a right angle. Letting $OA = OB = r$, the area of the fillet is equal to the area of the square $AOBC$ − area of the quadrant AOB; hence, $A = r^2 - \frac{1}{4}\pi r^2 = r^2(1 - .7854)$, or

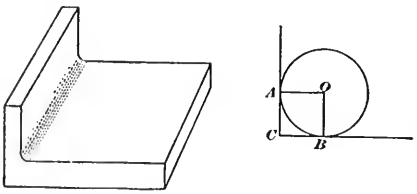

Fig. 61.

$$A = .2146r^2.$$

EXAMPLE.—If the radius of a fillet is ¼ in., what is the area of the fillet?
SOLUTION.—Applying the formula, $A = .2146 \times (\frac{1}{4})^2 = .01341$ sq. in.
Ans.

It will be noted that the area is quite small; and since the radius is never very large, it is sufficiently exact for practical purposes to take the value of A as one-fifth the square of the radius.

EXAMPLES

(1) If the length of an arc is 10.26 in. and its radius is 33.14 in., what is the angle in radians and also in angular measure? *Ans.* { .30960 − radians. 17° 44′ 19″.

(2) If a certain angle measures 31° 12′ 27″, what is the length of the arc having this angle, the radius of the arc being 19.32 in.? *Ans.* 10.523 in.

(3) The chord of an arc is 14¾ in., the height of the arc is 1⅞ in., what is the length of the arc and what is the angle in radians and degrees?

Ans. { l = 15.378 in. θ = .99586 radian. $v°$ = 57° 3′ 32″.

(4) Referring to the example of Art. **95**, how many gallons are in the tank when the depth of the water is 54 in.? *Ans.* 1671 gallons.

(5) A fillet has a radius of 5/16 in.; what is the area of the fillet?
Ans. .021 − sq. in.

INSCRIBED AND CIRCUMSCRIBED POLYGONS

97. An **inscribed polygon** is one whose vertexes lie on the circumference of a circle. In Fig. 62 the vertexes of the polygon *ABCDEF* lie on the circumference of the circle *ABCDEF*, and it is, therefore, an inscribed polygon. A **circumscribed polygon** is one whose sides are tangent to a circle. In Fig, 62. the sides of the polygon *ABCDEF* are all tangent to the circle *A′B′C′D′E′F′*, and it is, therefore, a circumscribed polygon with reference to the circle *A′B′C′D′E′F′*.

If the polygon is a regular polygon, it may always be inscribed in a circle, and it may also be circumscribed about a circle. The polygon in Fig. 62 is a regular hexagon, and it is a property of the regular hexagon that the sides are always equal in length to the radius of the circle in which the hexagon is inscribed; thus $AB = BC = OC$. Consequently, a regular hexagon may be drawn by describing a circle and then spacing off on its circumference chords equal in length to the radius.

The center of the circles within which the regular polygon is inscribed and about which it is circumscribed is the geometrical

center of the polygon, and lines drawn from the center to the points of tangency, as OA', OB', etc. are apothems of the circumscribed polygon. Let a = the apothem and r = the radius of the circle within which the regular polygon is inscribed; then, if s = a side, $\frac{s}{2}$ = half a side = $B'B$, and $(\frac{s}{2})^2 = r^2 - a^2$, from which

$$s = 4\sqrt{r^2 - a^2}.$$

Given the radius r and the length s of the side, describe a circle with the radius r, and then space off on the circumference the length s. The value of a for polygons most commonly used may be obtained from the table given in Art. **81**, in which a is a multiple of s.

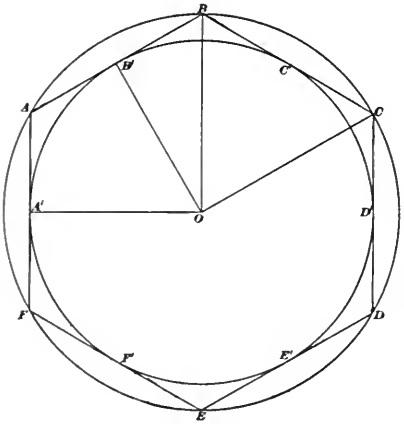

Fig. 62.

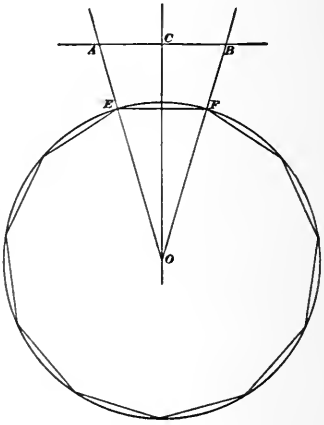

Fig. 63.

Example.—It is desired to inscribe a regular polygon of 11 sides in a circle having a diameter of 2½ in. Show how this can be done by means of the table in Art. **81**.

Solution.—The apothems given in the table are multiples of the length of the side; hence, if the side be taken as 1 inch, the apothem for a regular polygon of 11 sides will be 1.7028 in., say 1.7 in. Draw two lines AB and OC at right angles to each other, Fig. 63. Make OC equal to 1.7 in., the apothem, and $CB = CA = \frac{1}{2}s = \frac{1}{2}$ in., in this case (taking s as 1 in.), and draw OA and OB. With O as a center and a radius equal to the radius of the given circle $= \frac{1}{2} \times 2\frac{1}{2} = 1\frac{1}{4}$ in., describe a circle; join the points E and F, the points of intersection of OA and OB with the circle, by the line EF, and EF will be one of the sides of the inscribed 11-sided polygon, and may be spaced off around the given circle.

If it is desired to calculate the length of the side EF, first find the length of OB. In the right triangle OCB, $CB = .5$, and $OC = 1.7028$; hence, $OB = \sqrt{.5^2 + 1.7028^2} = 1.7747$ in. The triangles AOB and EOF are similar; whence the proportion $\frac{EF}{AB} = \frac{OF}{OB}$, or $\frac{s}{1} = \frac{1.25}{1.7747}$, and $s = .70434$ in.

If the line AB be taken as some length other than 1 inch, it must be multiplied by the value of the apothem as given in the table to find the length of OC.

THE ELLIPSE

98. The **ellipse** is a plain figure so constructed that the sum of the distances from any point on the curve to two fixed points is constant; thus, referring to Fig. 64, F and F' are the two fixed points, and $CF + CF' = PF + PF' = QF + QF' =$ etc., and the

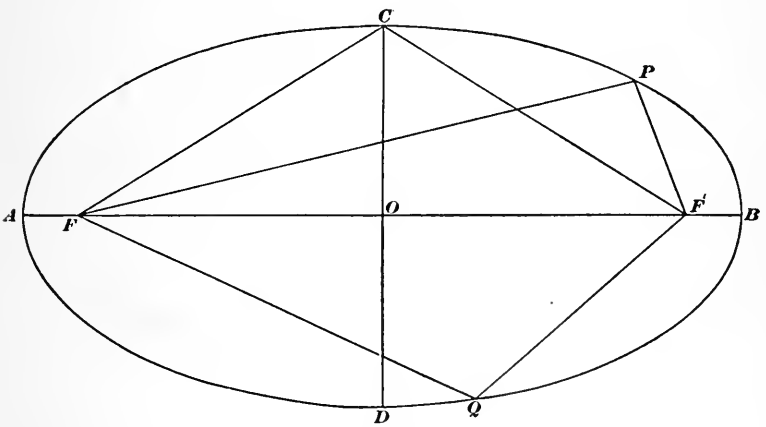

Fig. 64.

closed curve is an ellipse. The longest line that can be drawn in the figure is the line AB, which passes through the two fixed points F and F'; it is called the **major axis.** From the center O of the major axis, draw CD at right angles to AB; then CD is the shortest line that can be drawn in the ellipse, and is called the **minor axis.** The points A and B at the extremities of the major axis are called the **vertexes** of the ellipse; the point O is called the **center,** and the fixed points F and F' are called the **foci,** either

point being called a **focus** of the ellipse. The vertexes, center, and foci all lie on the major axis, and the distance AF' must equal the distance $F'B$; hence, for the point A, $FA + F'A = F'A + F'B = AB$; and *the sum of the distances from any point on the curve to the foci is equal to the major axis.* For the point C, $CF = CF' = \frac{1}{2}AB = OA = OB$.

In practice, an ellipse is usually specified by giving the lengths of the major and minor axes, which are commonly called the **long** and **short** diameters. An ellipse may be drawn mechanically in the following manner: Lay off the long diameter (major axis), and bisect it, thus locating the center O; through O, draw a perpendicular CD, and lay off $OC = OD$ = one-half the short diameter (minor axis); then, with C (or D) as a center and with a radius equal to one-half the long diameter, draw short arcs cutting AB in F and F', thus locating the foci. Stick pins in the paper at F and F' and also at C; tie one end of a piece of thread to one of the pins F or F', and pass the thread around the other two pins, drawing it taut and passing it several times around the pin at the other focus. Now pull out the pin at C, and with a pencil held perpendicular to the plane of the paper and pressing against the thread (but not hard enough to stretch it), move it so that it keeps the thread tight, thus describing one-half of the ellipse, say the upper half $ACPB$; then bring the thread to the other side of the pins, describe the other half of the ellipse or $ADQB$.

99. Circumference and Area of Ellipse.—In works on mathematics, it is customary to denote one-half the major axis by the letter a and one-half the minor axis by the letter b; thus, in Fig. 64, $a = OA = OB$, and $b = OC = OD$. The area of an ellipse is

$$A = \pi ab \qquad (1)$$

There is no exact formula giving the circumference (periphery) of an ellipse, but the following formula, in which $r = \dfrac{a - b}{a + b}$ and p = the circumference (periphery), gives results sufficiently exact for all practical purposes:

$$p = \pi(a + b)\frac{64 - 3r^4}{64 - 16r^2} \qquad (2)$$

EXAMPLE.—The long and short diameters of an ellipse are 16¼ in. and 4½ in. respectively; what is the area of the ellipse? what is the circumference.

SOLUTION.—The area, by formula (1), is

$$A = \pi ab = 3.1416 \times \frac{16.25}{2} \times \frac{4.5}{2} = \frac{3.1416}{4} \times 16.25 \times 4.5$$
$$= .7854 \times 16.25 \times 4.5 = 57.432+ \text{ sq. in.} \quad \textit{Ans.}$$

The circumference (periphery), by formula (2), is

$$p = 3.1416 \left(\frac{16.25}{2} + \frac{4.5}{2}\right) \frac{64 - 3 \times .56627^4}{64 - 16 \times .56627^2} = 35.264 \text{ in.} \quad \textit{Ans.}$$

To apply formula (2), first calculate the value of r; thus, $r = \frac{a-b}{a+b}$ $= \frac{2a-2b}{2a+2b} = \frac{16.25 - 4.5}{16.25 + 4.5} = .56627-$. Then, $r^2 = .320662-$; $r^4 = (r^2)^2$ $= .320662^2 = .102824+$; the remainder of the work is evident.

It may be remarked that the major axis divides the ellipse into two equal parts; the minor axis also divides the ellipse into two equal parts.

AREA OF ANY PLANE FIGURE

100. If the figure can be divided into elementary plane figures (*i.e.* triangles, rectangles, circles, segments, etc.) the area of each of the elementary figures may be calculated, and the sum will be the area of the entire figure. Referring to Fig. 65, the dotted lines show that the figure may be divided into three trapezoids two of them equal —one rectangle, a segment of a circle, and two equal fillets. From the dimensions marked on the drawing, the areas of all these elementary figures may be found, and their sum will be the area of the entire figure. The work is as follows:

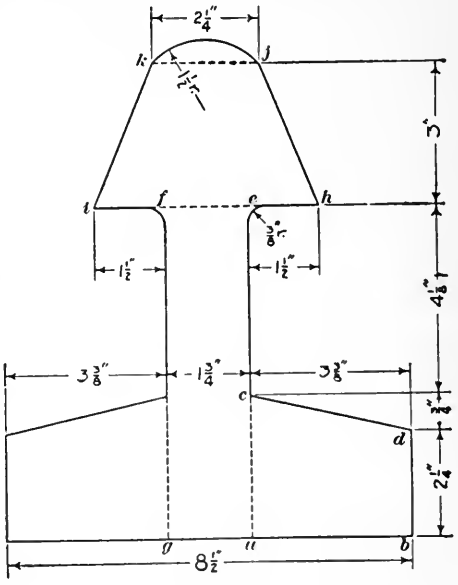

FIG. 65.

There are two trapezoids of the same size as *abdc*; the length of the side *ac* is $2\frac{1}{4} + \frac{3}{4} = 3''$, and the area of the two trapezoids is

$$A = \frac{3 + 2\frac{1}{4}}{2} \times 3\frac{3}{8} \times 2 = 17.72 \text{ sq. in.}$$

The length of the rectangle is $2\frac{1}{4} + \frac{3}{4} + 4\frac{1}{8} = 7\frac{1}{8}''$, and its area is

$$A = 7\tfrac{1}{8} \times 1\tfrac{3}{4} = 12.47 \text{ sq. in.}$$

The length of the side ih of the trapezoid $kjhi$ is $1\frac{1}{2} + 1\frac{3}{4} + 1\frac{1}{2} = 4\frac{3}{4}''$ and its area is $\frac{4\frac{3}{4} + 2\frac{1}{4}}{2} \times 3 = 10.5$ sq. in.

The area of the fillets is $2 \times \frac{1}{5} \times (\frac{3}{8})^2 = .06$ sq. in.

Concerning the segment, the radius and the chord are known and it is necessary to calculate the height. Using formula (3), Art. **87**, $h = r - \frac{1}{2}\sqrt{4r^2 - c^2} = 1.5 - \frac{1}{2}\sqrt{4 \times 1.5^2 - 2.25^2} = .508''$.

Substituting this value of h in formula (4), Art. **95**,

$$A = \frac{4 \times 508^2}{3}\sqrt{\frac{2 \times 1.5}{.508}} - .608 = .79 \text{ sq. in.}$$

The entire area is $17.72 + 12.47 + 10.5 + 0.06 + 0.79 = 41.54$ sq. in.

101. If the figure is of such a nature that it cannot be divided into simple elementary figures, proceed as in Fig. 66. Draw a

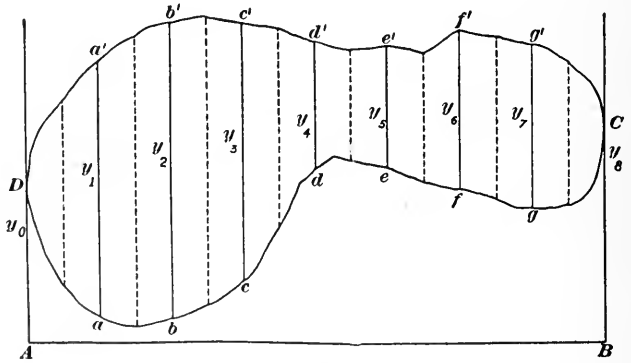

Fig. 66.

line AB, either through the figure or outside of it, as in Fig. 66; then draw lines CB and DA tangent to the extreme ends of the given outline and perpendicular to the line AB. The intersection of the tangents with AB locate the points A and B. Divide AB into any convenient *even* number of equal parts, in the present case 8, and through the points of division, erect perpendiculars (called **ordinates**) to AB; these intersect the figure in the lines

$a'a$, $b'b$, $c'c$, etc., which are all parallel to one another, and are equally distant apart. If n = the number of parts into which AB has been divided, and h = the distance between two consecutive ordinates, measured parallel to AB, $h = \frac{AB}{n}$.

If, now, another series of ordinates are drawn midway between those previously drawn, here indicated by the dotted lines, and the lengths of these dotted ordinates are measured and added, the sum so obtained multiplied by h will be the approximate area of the figure. This method is called the **trapezoidal rule.** The greater the number of parts into which AB is divided, that is, the smaller the value of h, the more accurate will be the result obtained for the area.

102. Another rule that is more accurate than the method just described is what is known as **Simpson's rule.** Having drawn the ordinates dividing the figure into n equal parts (n being an *even* number), designate the ordinates by y_0, y_1, y_2, etc., as shown in the figure. Then letting y_0 and y_n be the end ordinates, the area by Simpson's rule is

$$A = \frac{h}{3}[y_0 + y_n + 4(y_1 + y_3 + y_5 + \text{etc.}) + 2(y_2 + y_4 + y_6 + \text{etc.})]$$

Expressed in words, Simpson's rule is:

Add the end ordinates, four times the odd ordinates, and 2 times the remaining even ordinates, and multiply this sum by one-third the distance between the ordinates.

Applying both methods to the outline given in Fig. 66, the lengths of the dotted ordinates, beginning with the left and proceeding in order to the right, are 0.97″, 1.52″, 1.51″, 1.04″, 0.57″, 0.67″, 0.85″, and 0.75″; their sum is 7.88″. The number of equal parts is $8 = n$, and $l = AB = 3.02''$. Therefore, $h = \frac{3.02}{8}$, and $A = \frac{3.02}{8} \times 7.88 = \frac{3.02 \times 7.88}{8} = 2.97$ sq. in., by the trapezoidal rule.

Applying Simpson's rule, y_0 and y_8 are both equal to 0; $y_1 = 1.34''$, $y_3 = 1.34''$, $y_5 = 0.64''$, $y_7 = 0.85''$, and the sum of these odd ordinates is 4.17″; $y_2 = 1.56''$, $y_4 = 0.67''$, $y_6 = 0.83''$, and the sum of these even ordinates is 3.06″. Therefore, by the rule, since $\frac{h}{3} = \frac{3.02}{8} \times \frac{1}{3} = .12583$,

$$A = .12583\ (0 + 0 + 4 \times 4.17 + 2 \times 3.06) = 2.87 \text{ sq. in.}$$

103. It was stated in Art., **101** that the greater the number of parts into which AB is divided the greater the accuracy of the result, and this is true whichever method is used. If AB be divided into 16 equal parts instead of 8, the area will be 2.954 sq. in. by the trapezoidal rule and 2.890 by Simpson's rule. For 32 equal divisions, Simpson's rule gives 2.919 sq. in. Tabulating these results,

Trapezoidal rule (8 parts).....	2.975 sq. in.	Error, +0.056
Trapezoidal rule (16 parts).....	2.954 sq. in.	Error, +0.035
Simpson's rule (8 parts).....	2.869 sq. in.	Error, −0.050
Simpson's rule (16 parts).....	2.890 sq. in.	Error, −0.029
Simpson's rule (32 parts).....	2.919 sq. in.	Error, 0

Assuming that the result obtained by Simpson's rule for 32 parts is correct to all four figures, it will be observed that the error when using the trapezoidal rule is somewhat greater than when using Simpson's rule. In practice, it is always advisable to divide AB into at least 10 parts; this not only increases the accuracy, but it makes n a very convenient number to divide by when finding h. If particularly accurate results are desired, it is best to make $n = 20$, in which case, the result will be as accurate as the limits of measurement permit.

ELEMENTARY APPLIED MATHEMATICS

(PART 2)

EXAMINATION QUESTIONS

(1) The length of the diagonal of a square is $5\frac{1}{4}$ inches; what is (*a*) the length of one of the sides, and (*b*) what is the area?

Ans. { (*a*) 3.7123 in.
(*b*) 13.781 sq. in.

(2) The lengths of the sides of a triangle are 29.1 ft., 21.8 ft., and 36.5 ft.; what is the area of the triangle?

Ans. 317.18 sq. ft.

(3) The side of a regular dodecagon measures $4\frac{7}{8}$ in.; what is the area of the polygon? *Ans.* 266.08 sq. in.

(4) If (*a*) the diameter of a circle is $35\frac{3}{4}$ in., what is its area? (*b*) What must be the diameter of a circle that will enclose an area of 1800 sq. in.?

Ans. { (*a*) 1003.8 sq. in.
(*b*) 47.873 in.

(5) The length of the chord of a circular arc is $46\frac{5}{8}$ in., the height of the arc is $10\frac{1}{4}$ in., what is (*a*) the radius? (*b*) the angle in radians? (*c*) the angle in degrees? First find length of arc.

Ans. { (*a*) 31.636 in.
(*b*) 1.6570 radians.
(*c*) 94° 56′ 27″

(6) Referring to the last example, what is (*a*) the chord of half the arc? (*b*) what is the height of half the arc?

Ans. { (*a*) 25.466 in.
(*b*) 2.6756 in.

(7) The diameters, of two belt pulleys are 64 in. and 14 in. and the distance between the centers is 18 ft. 9 in. (*a*) What length of open belt is required? (*b*) what length of crossed belt? Give lengths to nearest 16th of an inch.

Ans. { (*a*) 47 ft. $11\frac{5}{16}$ in.
(*b*) 48 ft. $3\frac{5}{16}$ in.

(8) If the central angle of a circular arc is 121° 27′ 36″, (*a*) what is the angle in radians? (*b*) if the radius is 241 ft., what is the length of the arc?

Ans. { (*a*) 2.1199 radians. (*b*) 51.938 ft.

(9) Find from the dimensions given, the area of the outline shown in Fig. 1. The dotted lines indicate how the figure should be divided. As shown, the figure is divided into two semi-circles, two rectangles, two trapezoids, two sectors, and two fillets.

Ans. 28.261 sq. in.

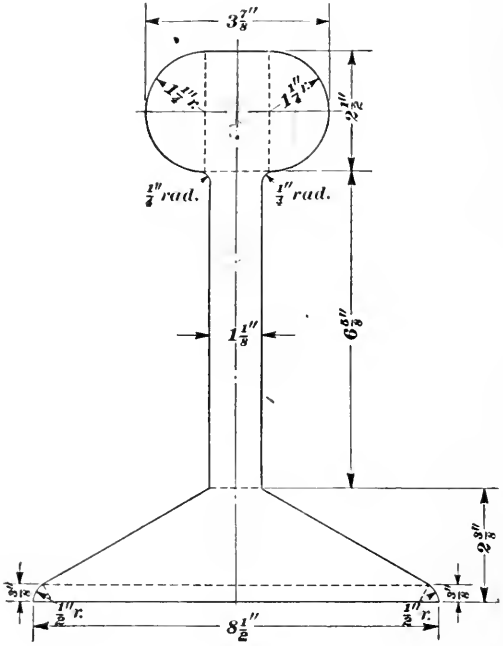

Fig. 1.

(10) If the chord of a circular arc is 8.5 in. and the height of the arc is $1\frac{5}{16}$ in., what is (*a*) the radius? (*b*) the length of the arc? (*c*) the angle in radians? (*d*) the angle in degrees? (*e*) the area of the sector?

Ans. { (*a*) 7.5372 in. (*b*) 9.0307 in. (*c*) 1.1981 radians. (*d*) 68° 38′ 56″ (*e*) 34.033 sq. in.

(11) Referring to the last question, (*a*) what is the area of the segment? (*b*) Calculate the area also by formula (4) of Art. 95.

Ans. { (*a*) 7.578 sq. in.
(*b*) 7.575 sq. in.

(12) If the major and minor axes of an ellipse are 37 in. and $12\frac{1}{2}$ in., respectively, (*a*) what is the area? (*b*) what is the periphery of the ellipse?

Ans. { (*a*) 363.25 sq. in.
(*b*) 82.594 in.

(13) The outline shown in Fig. 2 resembles an indicator diagram showing the variation of pressure in a steam-engine cylinder. Find the area of the diagram (*a*) by the trapezoidal rule,

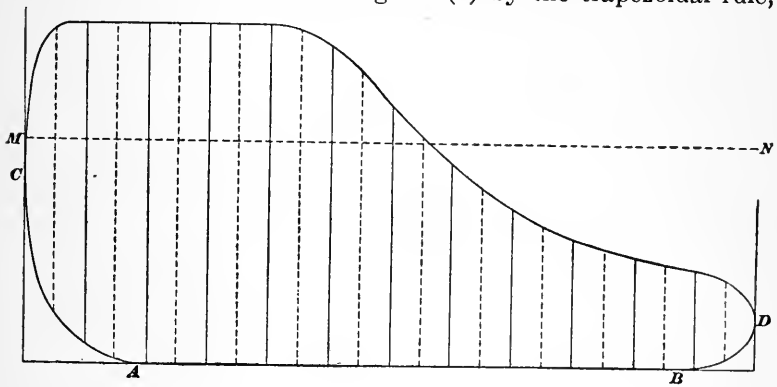

FIG. 2.

and also by (*b*) Simpson's rule. The end ordinates should be tangent to the curve at C and D and perpendicular to a line parallel to AB. The value obtained by dividing the area by the perpendicular distance between the end ordinates is called the *mean ordinate*, and is indicated on the diagram by the dotted line MN; that is, it is equal to the perpendicular distance between MN and AB. Find (*c*) value of the mean ordinate. Divide diagram into 12 equal parts; for the convenience of the student, the ordinates have been drawn in position.

(14) A certain building lot has the shape of a sector of a circle whose radius is 149 ft., the frontage being 117 ft. What is the area of the lot, and what part of an acre is it?

Ans. 8716.5 sq. ft. = .20010 A.

(15) An opening is to have the shape of an equilateral triangle and is required to have an area of 16 sq. in.; what is the length of one of the sides?

Ans. 6.0787 in.

(16) Referring to Question 7, suppose the speed of the belt is 2640 ft. per min. and there is no slip; (*a*) how many revolutions per minute does the large pulley make? (*b*) how many does the small pulley make?

Ans. { (*a*) 157.56 r.p.m.
(*b*) 720.30 r.p.m.

ELEMENTARY APPLIED MATHEMATICS

(PART 3)

MENSURATION OF SOLIDS

PRISMS, CYLINDERS, CONES, AND SPHERES

POLYEDRONS

104. Every solid has three dimensions—length, breadth, and thickness; see Art. **43**. A simple example of a solid is shown in Fig. 67. Here the sides $aa'b'b$, $bb'c'c$, $cc'd'd$, and $aa'd'd$ are called the **faces** or **lateral sides**; the end sides $abcd$ and $a'b'c'd'$ are called the **bases.** Both ends and all the faces are *flat*, *i.e.*, they form parts of plane surfaces, and in the illustration, the ends are parallel and the opposite faces are also parallel.

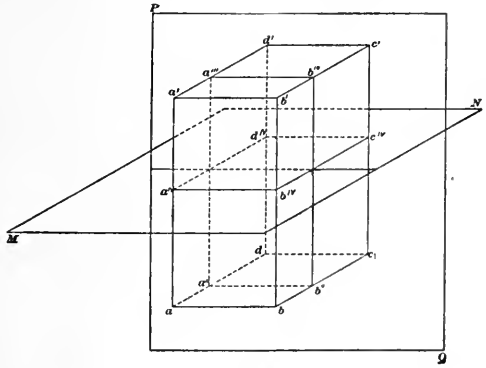

Fig. 67.

The planes of the faces intersect in right lines to form the **edges** of the solid; in Fig. 67, the edges formed by the intersection of the sides are $a'a$, $b'b$, $c'c$, and $d'd$. The planes of the faces also intersect the planes of the bases in right lines to form the edges at the ends of the solid; in Fig. 67, the edges formed by the

intersection of the faces and ends are ab, bc, cd, da, $a'b'$, $b'c'$, $c'd'$, and $d'a'$.

105. Prisms.—Any solid whose ends and sides are made up of plane surfaces is called a **polyedron.** If the polyedron has two equal and parallel bases, it is called a **prism,** and if the bases of the prism are rectangles or squares, it is called a **parallelopiped.** The solid shown in Fig. 67 is a prism and also a parallelopiped. The bases of a prism may be polygons of any shape—regular or otherwise—but they must be *parallel* and *equal.*

106. If the planes of the bases are perpendicular to the planes of the sides, the lateral edges are perpendicular to the edges of the bases, and the prism is called a **right prism.** Fig. 67 shows a right prism, which is also a **right parallelopiped.**

107. If a prism be intersected by a plane at right angles to the lateral edges, as the plane MN in Fig. 67, the outline of the plane figure so formed will be equal to the bases, and the section is called a **right section** or a **cross section** (usually, the latter). In Fig. 67, the plane MN intersects the prism in the cross section $a^{IV}b^{IV}c^{IV}d^{IV}$, which is equal and parallel to the base $abcd$.

108. If a prism be intersected by a plane at right angles, *i.e.*, perpendicular to, the bases, the section so formed is called a **longitudinal section;** in Fig. 67, the plane PQ intersects the prism in the longitudinal section $a''b''b'''a'''$, the plane PQ being perpendicular to both bases. Whatever the shape of the prism, every longitudinal section is a rectangle, since it can cut only two faces at one time, or if it cuts three faces, it must pass through one of the edges, thus forming but one side of the rectangle.

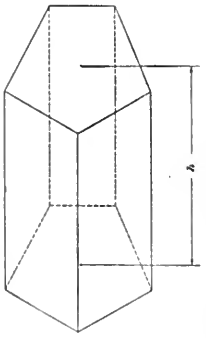

Fig. 68.

109. The **altitude** of a prism is the perpendicular distance between the bases. Thus, in Fig. 68, suppose that the sides are not at right angles to the bases; then h, which represents the perpendicular distance between the planes of the bases, is the altitude.

110. Referring to Figs. 67 and 68, it will be observed that the sides of any prism are parallelograms, and when the prism is a right prism, the sides are rectangles. Since the bases are parallel, all the lateral edges are of equal length.

111. Area and Volume of Prism.—By lateral area is meant the area of the outside of the solid not counting the ends; in the case of a prism, it is equal to the area of the faces.

Referring to Fig. 67, note that if the plane MN is perpendicular to one of the faces, it is perpendicular to all of them, and the lines of intersection of the plane with the faces are perpendicular to the edges; thus, $a^{IV}b^{IV}$ is perpendicular to $a'a$ and $b'b$, $b^{IV}c^{IV}$ is perpendicular to $b'b$ and $c'c$, etc. Hence, these lines are equal to the altitudes of the parallelograms forming the faces, the lengths being all equal to the lengths of the lateral edges, which are all equal. Consequently, the lateral area of a prism is equivalent to that of a rectangle whose length is one of the lateral edges and whose altitude is equal to the sum of the lengths of the lines formed by the intersection of the plane MN (perpendicular to the lateral edges) with the faces of the prism, and this latter is equal to the perimeter of the polygon formed by the intersection of the plane MN with the faces.

Let A = the lateral area of the prism, l = length of a lateral edge, and p = the perimeter of the polygon formed by a right section of the prism = perimeter of either base; then,

$$A = pl \qquad (1)$$

If the area of the ends is also included, the result is called the **entire area.** Let A_e = the entire area and let a = the area of one end; then,

$$A_e = A + 2a = pl + 2a \qquad (2)$$

112. By **volume** of a solid is meant the number of cubic units that it contains; if the unit of measurement is one inch, then the volume is the number of cubic inches that the solid would occupy if made of some soft material that could be formed into a cube. The phrase **cubical contents** is frequently used instead of the word volume, and the two terms have identically the same meaning.

Let V = the volume of a prism, a = the area of one of the bases, and h = the altitude; then,

$$V = ah \qquad (1)$$

That is, *the volume of a prism is equal to the area of the base multiplied by the altitude.*

If the base is a rectangle, let l = the length and b = the breadth; then,

$$V = blh \qquad (2)$$

If the base is a square, let d = the length of one of the sides; then,

$$V = d^2h \qquad (3)$$

If the base is a square and the altitude is equal to one of the sides of the base,

$$V = h^3 \qquad (4)$$

If the prism is a right prism, the altitude is equal to one of the lateral edges, and if it is also equal to one of the edges of the base, the prism is a cube, and its volume is found by formula (4).

EXAMPLE 1.—A room is 22 feet long, 14 ft. 8 in. wide, and 9 ft. 10 in. high; how many cubic feet of air does the room contain?

SOLUTION.—The cubical contents of the room is, by formula (2), the product of the length, width, and height. 14 ft. 8 in. $= \frac{176}{12}$ ft. and 9 ft. 10 in. $= \frac{118}{12}$ ft. Hence, $V = 22 \times \frac{176}{12} \times \frac{118}{12} = \frac{456896}{144} = 3172\frac{8}{9}$ cu. ft. *Ans.*

EXAMPLE 2.—A blowpit 20′ × 10′ × 14′ is filled with stock weighing 65 lb. per cubic foot; what is the weight of the stock? If the stock is 5.7% fiber, what is the weight of the fiber?

SOLUTION.—The cubical contents of the blowpit is 20 × 10 × 14 = 2800 cu. ft. Since 1 cu. ft. of stock weighs 65 lb., the weight of the stock is 2800 × 65 = 182,000 lb. *Ans.*

Since 5.7% of the stock is fiber, the weight of the fiber is 182,000 × .057 = 10,374 lb. *Ans.*

113. Pyramids.—A **pyramid** is a polyhedron having one base, a polygon, and whose sides are triangles meeting at a common point called the **vertex.** When a pyramid is referred to by letters placed at the vertex and at the corners of the base, the letter at the vertex is written first, followed by a short dash, and then the letters of the base. Thus, the pyramid shown in Fig. 69 would be referred to as the pyramid *s–abcd.*

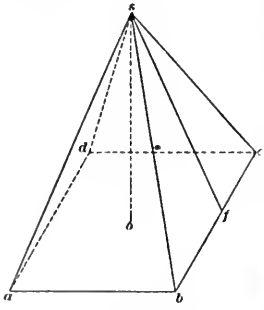

FIG. 69.

Note that the pyramid in Fig. 69 has a square base; the sides *asb*, *bsc*, *csd*, and *dsa* are triangles whose vertexes have the common point *s*. The polyedron (pyramid) in this case is formed by the intersection of five planes—four forming the sides and the fifth forming the base.

If, from the vertex *s*, a perpendicular be drawn to the base, the line *so* in Fig. 69, this line is the **altitude** of the pyramid.

If the base of a pyramid is a regular polygon and the projection of the vertex upon the base coincides with the geometrical center of the base, the pyramid is called a **regular pyramid.** Suppose that the base of the pyramid shown in Fig. 69 is a square and that the point *o*, which is the projection of the vertex *s* upon the base, is the center of the square, then *s–abcd* is a regular pyramid, and the line *so* is called the **axis** of the pyramid. The length of *so* is also equal to altitude of the pyramid.

If a line *sf* be drawn from the vertex *s* perpendicular to one of the sides of the base of a *regular* pyramid, this line is called the **slant height.** There will be as many slant heights as there are sides in the polygon forming the base, and for regular pyramids, all slant heights are equal; if the pyramid is not regular, some or all the slant heights are different.

114. Area and Volume of Pyramid.—*The lateral area of any regular pyramid is equal to perimeter of the base multiplied by one-half the slant height.* This is evident, since the sides are isosceles triangles, and the area of one side is $\frac{sf}{2} \times bc$, Fig. 69; hence, the lateral area is $\frac{sf}{2} \times bc \times n$ (n = number of sides in the base). But $n \times bc = p$, the perimeter of the base. Let s = the slant height and A = the lateral area; then,

$$A = \frac{s}{2} \times p = \tfrac{1}{2}sp$$

If the pyramid is not regular, calculate the area of each face and find the sum.

115. *The volume of any pyramid is equal to the area of the base multiplied by one-third the altitude.* Let h = the altitude = *so* in Figs. 69 and 70, V = the volume, and a = the area of the base; then,

$$V = \frac{h}{3} \times a = \tfrac{1}{3}ha$$

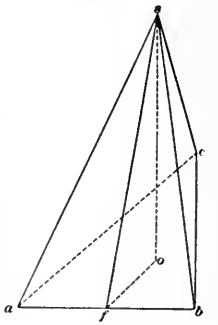

FIG. 70.

EXAMPLE.—The sides of the base of a regular triangular pyramid are 13¼ in. long and the altitude is 18⅜ in.; what is the entire area and what is the cubical contents of the pyramid.

SOLUTION.—Fig. 70 shows a sketch of the pyramid. Here *sf* is the slant height and *so* is the altitude. The base *abc* is an equilateral triangle, and *of* is the apothem, the length of which is (see table, Art. **81**) .28868 × 13.25 = 3.825 in. The triangle *sof* is a right triangle, right-angled at *o*, and *sf*

$= \sqrt{3.825^2 + 18.375^2} = 18.769$ in. The lateral area is, by formula of Art. **114**, $A = \frac{18.769}{2} \times 13.25 \times 3 = 373.034$ sq. in. The area of the base is, by formula (**2**) of Art. **69**, $\frac{13.25^2}{4}\sqrt{3} = 76.021$ sq. in. The entire area therefore is $373.03 + 76.02 = 449.05$ sq. in. *Ans.*

The volume is given by the formula above, and is

$$V = \frac{18.375}{3} \times 76.02 = 465.62 \text{ cu. in.} \quad \textit{Ans.}$$

116. Frustum of a Pyramid.—If a pyramid be intersected by a plane parallel to the plane of the base and the top part removed, the remaining portion of the pyramid is called a **frustum** of the pyramid. Thus, referring to Fig. 71, the plane $a'b'c'd'e'$ is parallel to the base *abcde*; now removing that part of the pyramid above the intersecting plane (here indicated by the dotted lines), the remaining part is a frustum of the pyramid *s–abcde*. The two bases of the frustum are similar plane figures (see Art. **139**), and they must be parallel.

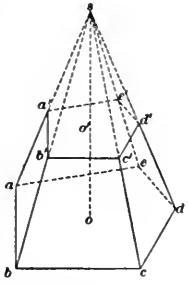

FIG. 71.

A good example of a frustum of a pyramid is the bottom of a bin; also, a spout. Here the frustum is inverted, the large end being up, and the ends are open. In such cases, the frustum has the shape of a solid that would exactly fit the opening.

The altitude of a frustum is the perpendicular distance between the bases; it is indicated in Fig. 71 by the dotted line $o'o$, which is a part of the altitude of the pyramid.

If the frustum is a part of a regular pyramid, the **slant height** of the frustum is that part of the slant height of the pyramid that is included between the bases.

117. In problems relating to frustums, the altitude and the length of the sides of both bases are usually given. For a regular pyramid, the sides are equal trapezoids, and the lateral area is n times the area of one side, where n = the number of sides. Let p' = the perimeter of the lower (larger) base and p'' = the perimeter of the upper base; then, if s = the slant height of the frustum of a regular pyramid and A = its lateral area,

$$A = \tfrac{1}{2}s(p' + p'')$$

118. To find the volume of any frustum of a pyramid, whether a regular pyramid or otherwise, let a' = area of lower base,

a'' = area of upper base, h = the altitude, and V = the volume of the frustum; then,

$$V = \tfrac{1}{3}h(a' + a'' + \sqrt{a' \times a''})$$

That is, *the volume of a frustum of any pyramid is equal to one-third the altitude multiplied by the sum of the areas of the two bases and the square root of their product.*

Example.—The lengths of the edges of the lower base of a frustum of a triangular pyramid (one having three sides) are 12 in., 15 in., and 18 in.; the corresponding edges of the upper base are 7 in., 8¾ in., and 10½ in.; if the height of the frustum is 10 inches, what is its volume?

Solution.—Using the formula of Art. **70**, the area of the upper base is

$$A = \tfrac{1}{4}\sqrt{26.25(26.25 - 2 \times 7)(26.25 - 2 \times 8.75)(26.25 - 2 \times 10.5)}$$
$$= 30.385 \text{ sq. in. since } p = 7 + 8.75 + 10.5 = 26.25 \text{ in.}$$

Using the same formula, area of lower base is 89.294 sq. in.

Then, volume of frustum is

$$V = \tfrac{1}{3} \times 10(89.294 + 30.385 + \sqrt{89.294 \times 30.385}) = 572.56 \text{ cu. in. } Ans.$$

119. Prismatoids.—A prismatoid is a polyedron whose ends are parallel, but the polygons forming the outline of the ends are not equal and may have a different number of sides. In Fig. 72 is shown a prismatoid, one end of which is a pentagon and the other end a quadrilateral. It will be noted that four of the sides, *abgf*, *aeif*, *eihd*, and *cdhg* are quadrilaterals, while the side *bgc* is a triangle. These sides are all plane surfaces, and are formed by passing planes through the edges of the lower base and the vertexes of the upper base. Thus, planes passed through the vertex g and the edges bc and cd intersect to form the lateral edge gc; the intersection of these two planes with planes passing through the edges ab and de and the vertexes g and f and h and i intersect in the lateral edges gb and hd; a fifth plane passed through ae and the vertexes f and i intersects the last two planes in the lateral edges fa and ie.

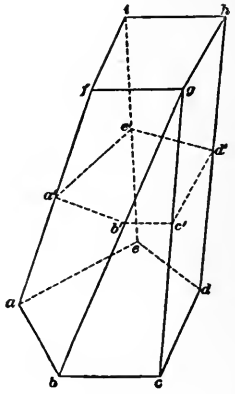

Fig. 72.

If both ends have the same number of sides and are similarly situated, the prismatoid is called a **prismoid.** Thus, the frustum of a pyramid is a prismoid, see Fig. 71, since the ends are parallel and both contain the same number of sides. Fig. 73 shows another prismatoid, the sides *ade* and *bcf* being triangles; one end, *abcd*, is a quadrilateral and the other end is a right line *ef*.

To find the volume of a prismatoid, let h = the altitude = the perpendicular distance between the parallel ends, let a' = area of lower base, a'' = area of upper base, and a_m = area of the middle cross section; then *the volume of the prismatoid is equal to one-sixth the altitude multiplied by the sum of the areas of the upper and lower bases and* 4 *times the area of the middle cross section;* that is,

$$V = \frac{h}{6}(a' + a'' + 4a_m)$$

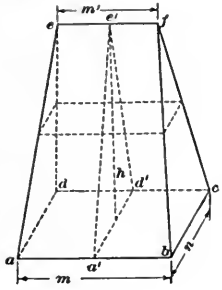

FIG. 73.

To find the area of the middle section, note that a', Fig. 72, is midway between a and f, b' is midway between b and g, etc.; hence, $a'b' = \frac{fg + ab}{2}$, $b'c' = \frac{bc + 0}{2} = \frac{bc}{2}$, $c'd' = \frac{gh + cd}{2}$, etc. Knowing the lengths of the sides and their position and directions, the area can be found.

This formula is called the **prismoidal formula;** it may be used to calculate the volumes of many solids besides prismatoids. Applying it to the example of the last article, the sides of the middle section are $\frac{7 + 12}{2} = 9.5$, $\frac{15 + 8.75}{2} = 11.875$, and $\frac{18 + 10.5}{2} = 14.25$; the area of this triangle is 55.964 sq. in. Therefore, the area of the prismoid (frustum) is $V = \frac{1}{6} \times 10\ (89.294 + 30.385 + 4 \times 55.964) = 572.56$ cu. in..

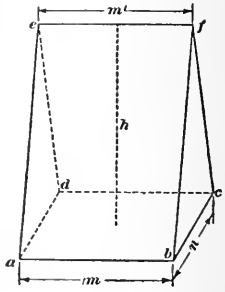

FIG. 74.

120. The Wedge.—When the base of the prismatoid is a rectangle and the end parallel to it is a right line parallel to one of the edges of the base, the prismatoid is called a **wedge.** Referring to Figs. 73 and 74, if the base *abcd* is a rectangle and *ef* is parallel to *ab*, the figure represents a wedge. In Fig. 73, the upper base, the line *ef*, is shorter than $ab = dc$, and the solid is a prismatoid; in Fig. 74, $ef = ab = dc$, and the solid is a triangular prism whose bases, *eda* = *fcb*, are parallel, and whose altitude is *ab*.

The volume of the prismatoid in Fig. 73 may be found by applying the prismoidal formula; but an easier method is to find

the sum of parallel sides, divide it by 3, and multiply the quotient by the area of a right section— one taken at right angles to the parallel sides. Thus, letting a = the area of the right section $a'e'd'$,

$$V = \frac{a \times (ab + dc + ef)}{3} \qquad (1)$$

When the prismatoid becomes a wedge, $ab = dc$, and

$$V = \frac{a \times (2ab + ef)}{3} \qquad (2)$$

When a wedge becomes a prism, $ab = dc = ef$, and

$$V = a \times ab = ah$$

The volume of the wedge may also be calculated by the prismoidal formula. Thus, let $ab = m$, $bc = n$, $ef = m'$, and h = the altitude; then, for the middle section, the sides parallel to ab or dc are equal to $\frac{m + m'}{2}$; the sides parallel to bc or ad are equal to $\frac{0 + n}{2} = \frac{n}{2}$; 4 times the area of the middle section is $\frac{m + m'}{2} \times \frac{n}{2} \times 4 = mn + m'n$; the area of one end is mn, and the area of the other end is the line $ef = 0$; therefore, by the prismoidal formula, $V = \frac{h}{6}\left[mn + 0 + (mn + m'n)\right]$ or

$$V = \tfrac{1}{6}h(2m + m')n. \qquad (3)$$

For the wedge shown in Fig. 74, $m = m'$, and

$$V = \tfrac{1}{2}hmn. \qquad (4)$$

EXAMPLES

(1) How many cords of wood are contained in three piles having the following dimensions: 30′ 6″ × 7′ × 4′, 20′ × 8′ × 4′, and 8′ × 5′ × 4? One cord contains 128 cu. ft. *Ans.* $12\frac{59}{64}$, say 13 cords.

(2) A spout has the form of a frustum of a square pyramid; the bases are 18 in. and 10 in. square, and the altitude is 28 in. How many square feet of sheet iron will be required to make this spout? *Ans.* 11 sq. ft.

(3) How many gallons will the spout mentioned in the last example hold when filled? *Ans.* 24.404 gal.

(4) A trench 20 ft. wide and 36 ft. long is dug; the bottom of the trench is level, but the top slopes, one end of the trench being 8 ft. 9 in. deep, the other end 5 ft. 3 in. deep, and the slope gradual from end to end. If the walls and ends are vertical, how many cubic yards of material were removed? *Ans.* $186\frac{2}{3}$ cu. yd.

(5) A freight car is loaded with wood in the following manner, all sticks being cut to 4-foot lengths: two piles at each end of the car placed crosswise and one pile in the middle (divided into two equal parts) placed lengthwise of the car. The average height of the piles at one end is 7′ 8″, at the other end 7′ 6″, and the height of the pile in the middle is 7′; the inside dimensions of the car: length, 36 ft.; width, 8 ft. 6 in.; height 8 ft. If an allowance of 18 in. of the car length be made for spacing between the piles, how many cords were placed in the car? *Ans.* 16.3 cords.

SUGGESTION.—The total length of the piles is $36 - 1.5 = 34.5$ ft. The length of each pile placed crosswise (measured lengthwise of the car) is $(34.5 - 4) \div 2 = 15\frac{1}{4}$ ft.; since the length of the middle pile is 4 ft.

(6) A pedestal has a lower base 28″ × 40″, and upper base 21″ × 30″, and the perpendicular distance between the bases (which are parallel) is 28 in. How many cubic feet are in the pedestal? *Ans.* 14.99, say 15 cu. ft.

(7) How many cubic yards of concrete are required to make a foundation wall, the outside dimensions of which are: length, 136 ft.; breadth, 68 ft. 6 in., the height of the wall being uniformly 7 ft. 9 in. and the thickness being 18 in.? *Ans.* 173.514 cu. yd.

THE THREE ROUND BODIES

121. The Cylinder.—If one side *ad* of a rectangle *abcd*, Fig. 75, be fixed in position and the rectangle be revolved around this fixed side, the opposite side *cd* will generate a curved surface that is called a **cylinder.** The other two sides of the rectangle will generate the circles $bb'b''b'''$ and $cc'c''c'''$, which form the *ends* or **bases,** of the cylinder. It will be seen that the bases are parallel and that they are perpendicular to the line *ad* passing through their centers; the line *ad* is called the **axis** of the cylinder. Any line drawn on the cylinder parallel to the axis is called an **element of the cylindrical surface,** or, simply, an **element**; in Fig. 75, *bc*, $b'c'$, etc. are elements of the cylinder, and they are evidently positions occupied by the line *bc* as it revolves about the axis *ab* while generating the cylinder.

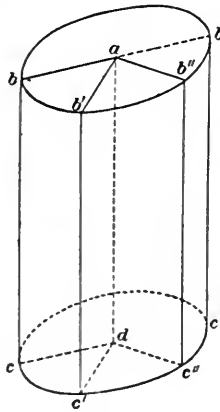

FIG. 75.

122. A cylinder generated as just described is called a **cylinder of revolution,** and since the bases are circles and perpendicular to the axis, it is also called a **right cylinder with circular base.**

The same rules and formulas that were given for finding the area and volume of a prism may be used to find the area and vol-

ume of a cylinder, but since all right sections are circles, these rules and formulas may be somewhat simplified. Referring to Fig. 76, suppose the cylinder is a cylinder of revolution and that it lies on a plane surface; the line (element) *ab* will then be the line of contact of plane and the cylinder, and the plane is said to be *tangent* to the cylinder. Now roll the cylinder on the plane surface until the element *ab* again comes in contact with the plane; the distance moved through by the cylinder will evidently be equal to the circumference of a circle whose diameter is equal to the diameter of the base. During this movement, every element of

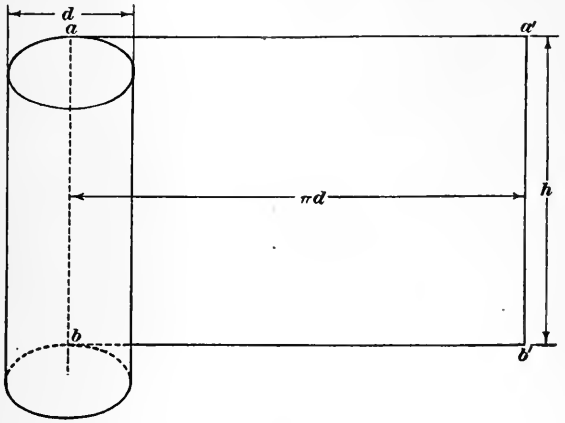

FIG. 76.

the cylinder has come into contact with the plane, and the surface thus touched by the cylinder, which is equal to the outside surface of the cylinder, is the rectangle $aa'b'b$, called the **development** of the cylinder. The outside area of a cylinder, corresponding to the lateral area in a prism, is called the **convex area,** and the surface is called the **convex surface.** The **diameter** of a cylinder is the diameter of a right section, and the **altitude** of a cylinder is the perpendicular distance between the bases; it is equal to the length of the axis in a cylinder of revolution, and it is represented by h in Fig. 77. Letting d = the diameter of the cylinder, l = the length of the axis, it is plain from Fig. 76 that the convex area of a cylinder of revolution is

$$A = \pi dl$$

If the cylinder is not a right cylinder, but has parallel bases, as in Fig. 77, it may be made a right cylinder by passing a plane

through the cylinder perpendicular to the axis and just touching one edge of the base at c; the part $ebjc$ thus cut off may be placed on the other end, as indicated by the dotted lines, and the cylinder then becomes a right cylinder $e'ecd$. The length of the axis is the same as before, that is, $o'o = o'''o''$; hence, $A = \pi dl$, as before.

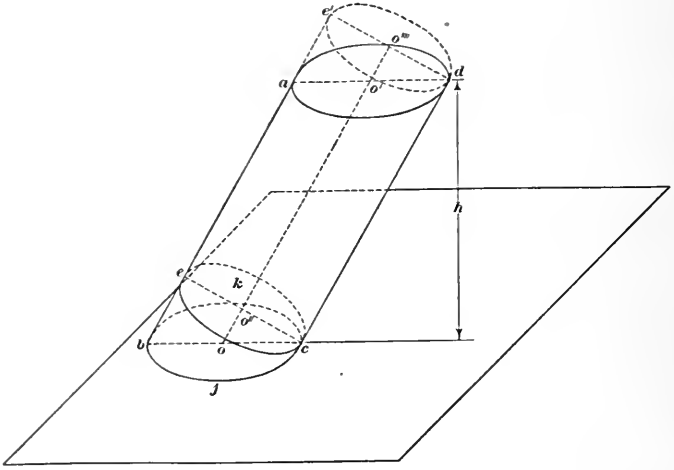

Fig. 77.

123. If one of the bases is perpendicular to the axis and the other is not, for instance, if the cylinder has the form $e'bcd$, Fig. 77, the area is equal to the sum of the areas of the right cylinder $e'ecd$ and the wedge-shaped solid cbe. The latter is evidently equal to one-half of a right cylinder whose base is the circle ec (center o'') and whose axis is equal to the element eb; that is, the area of $ebc = \frac{1}{2} \times \pi d \times eb = \pi d \times oo''$, since $\frac{1}{2} \times eb = oo''$. But, $oo'' + o''o''' = oo''' = \dfrac{e'b + dc}{2}$; hence, area of cylinder $e'bcd$ is $A = \pi d \times o''o''' + \pi d \times oo'' = \pi d(oo'' + o''o''')$, or

$$A = \pi d \left(\frac{e'b + dc}{2}\right)$$

If both bases are oblique to the axis, cut the cylinder by planes perpendicular to the axis, calculate the areas of both wedge-shaped solids and of the right cylinder included between them, and then find the sum of the three results.

EXAMPLE.—The cylindrical part of a plater roll forms a right cylinder 17 in. in diameter and 36 in. long; what is its convex area?

SOLUTION.—Using the formula of Art. **122**,

$$A = \pi \times 17 \times 36 = 1922\ 66 \text{ sq. in.} = 13.352 \text{ sq. ft.} \quad \textit{Ans.}$$

124. If a right cylinder be intersected by a plane oblique to the axis, which cuts the base of the cylinder, the part thus cut off, *ifgk*, Fig. 78, is called a **cylindrical ungula,** the word *ungula* having reference to an object shaped like a horse's hoof. Let *fg* be the line in which the cutting plane intersects the base. Bisect *fg*, and draw *k'k* through the point of bisection *o'*, and perpendicular to *fg*; then *k'k* is a diameter of the base. Let *o* be the middle point of *k'k*, and $ok = ok' = r$, the radius of the base = radius of cylinder. Let $o'f = o'g = a$, $o'k = b$, and arc $gk = 1/2$ arc $fkg = \phi$; then, the convex area of the ungula is, when h = the altitude *ik*,

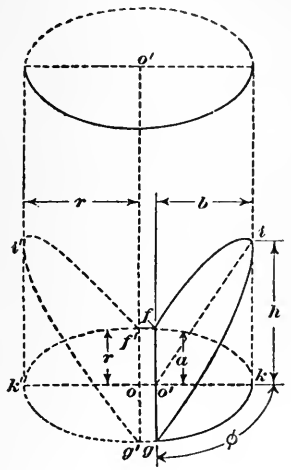

FIG. 78.

$$A = \frac{2rh}{b}\left[(b - r)\frac{\phi}{r} + a\right] \qquad (1)$$

If the line of intersection pass through the center of the base, as indicated by the dotted outline in Fig. 78, b and a are both equal to r, and formula (1) then becomes $A = \frac{2rh}{r}\left[(r - r)\frac{\phi}{r} + r\right]$, from which

$$A = 2rh \qquad (2)$$

If the cutting plane just touches the other edge of the base, as in the case of *ebc*, Fig. 77, $b = 2r$ and $a = 0$. Substituting these values in formula (1), $A = \frac{2rh}{2r}\left[(2r - r)\frac{\pi r}{r} + 0\right]$, since ϕ is then a semicircle and is equal to πr. Reducing this expression,

$$A = \pi rh = \tfrac{1}{2}\pi dh \qquad (3)$$

which is the same value as was obtained in Art. **123**. Note that $\frac{\phi}{r}$ is the angle *okg* in radians.

EXAMPLE.—Suppose the radius of a right cylinder is 9 in. and that the cylinder is cut by a plane in such manner that the altitude of the ungula is 8 in.; if $a = 6\frac{1}{2}$ in., what is the convex area of the ungula?

SOLUTION.—Referring to Fig. 78, $2a = 2 \times 6.5 = 13 = fg$ = chord of arc fkg; $b = o'k$ = height of arc = $h = r - \frac{1}{2}\sqrt{4r^2 - c^2} = 2.775$, by formula (3), Art. **87**; $\frac{\phi}{r}$ = one-half the length of the arc divided by the radius = $\frac{l}{2r}$. Since $t = \frac{h}{c} = \frac{2.775}{13} = .21346$, which is very near .21, use formula (3) of Art. **94**, and $\frac{\phi}{r} = \frac{l}{2r} = \frac{8rt(15 + 16t^2)}{2r(15 + 36t^2)} = .8070+$. Now substituting in formula (1),

$$A = \frac{2 \times 9 \times 8}{2.775}[(2.775 - 9)0.807 + 6.5] = 76.61 \text{ sq. in.} \quad \textit{Ans.}$$

125. *The volume of any cylinder whose bases are parallel is equal to the area of the base multiplied by the altitude;* it is also equal to the area of a right section multiplied by the length of the axis. If the cylinder is one of revolution, the base is equal to a right section, and both are equal to the area of a circle whose diameter is equal to the diameter of the cylinder; likewise, the altitude is equal to the length of the axis. Let h = the altitude, l = the length of the axis, d = the diameter of the cylinder, a = the area of the base; then,

$$V = ah = \frac{\pi}{4}d^2l \qquad (1)$$

For a cylinder of revolution,

$$V = \pi r^2 h = \frac{\pi}{4}d^2h \qquad (2)$$

When the bases are not perpendicular to the axis, they have the form of an ellipse, and their areas may be calculated by formula (1), Art. **99**. Thus, referring to Fig. 77, the lower base $bjck$ is an ellipse, whose major axis (long diameter) is bc, and whose minor axis (short diameter) is jk. Knowing these two dimensions (which call D and d, respectively), a in formula (1), Art. **99**, is $\frac{D}{2}$ and b is $\frac{d}{2}$; hence the area of the ellipse (base) is expressed by $\pi ab = \pi \times \frac{D}{2} \times \frac{d}{2} = \frac{\pi}{4}Dd$, and the volume of the cylinder is

$$V = \frac{\pi}{4}Ddh \qquad (3)$$

126. The volume of an ungula is given by the following formula, in which the letters have the same meaning as in formula (1), Art. **124**:

$$V = \frac{h}{3b}[a(3r^2 - a^2) + 3r(b - r)\phi] \qquad (1)$$

If the line of intersection fg of the cutting plane with the plane of the base passes through the center, as indicated by the dotted outline $i'k'g'f'$, Fig. 78, $a = b = r$, and formula (1) reduces to

$$V = \tfrac{2}{3}r^2h \qquad (2)$$

If the cutting plane just touches the edge of the base, as indicated by *ebjck*, Fig. 77, $a = 0$, $b = 2r$, $\phi = \pi r$, and formula (1) reduces to

$$V = \frac{\pi}{2}r^2h \qquad (3)$$

That formula (3) is correct is readily seen, since the ungula *cbc* is equal to one-half the cylinder whose base is the circle *cc* and whose altitude is $eb = h$ in formula (1).

EXAMPLE 1.—The shaft of a plater roll is 65 in. long and 8 in. in diameter; if made of steel, one cubic inch of which weighs .2836 lb., what is the weight of the shaft?

SOLUTION.—The shaft is a cylinder of revolution, and its volume is $V = \frac{\pi}{4}d^2l = \frac{\pi}{4} \times 8^2 \times 65 = .7854 \times 64 \times 65 = 3267.264$ cu. in. The weight of the shaft is $3267.264 \times .2836 = 926.6-$ lb. *Ans.*

EXAMPLE 2.—Referring to the example in Art. **124,** what is the volume of the ungula?

SOLUTION.—Here $r = 9$, $h = 8$, $a = 6.5$, b (found by calculation) $= 2.775$, and $\frac{\phi}{r}$ (found by calculation) $= .807$, or $\phi = .807 \times 9 = 7.263$. Substituting these values in formula (1),

$$V = \frac{8}{3 \times 2.775}[6.5\,(3 \times 9^2 - 6.5^2) + 3 \times 9(2.775 - 9)7.263] = 80.86 \text{ cu. in. } \textit{Ans.}$$

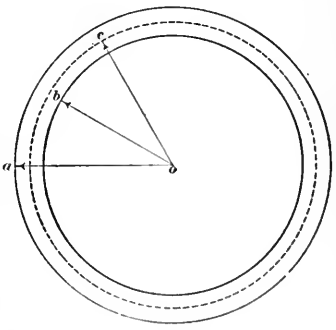

FIG. 79.

127. If the cylinder has a hole through it, it is called a **hollow cylinder, pipe** or **tube.** A cross section of a hollow cylinder is shown in Fig. 79. It is assumed that the hole is also a cylinder and that its axis coincides with the axis of the cylinder that contains the hole. The volume of the hollow cylinder is evidently equal to the difference of the volumes of the cylinder and hole. If l = the length of the cylinder, R = radius of cylinder, r = radius of hole,

$$V = \pi R^2l - \pi r^2l = \pi l(R^2 - r^2) = \pi l(R + r)(R - r)$$
$$= \frac{\pi}{4}l(D + d)(D - d) \qquad (1)$$

Suppose the cross section in Fig. 79 is that of a tube of thickness t; then $t = R - r = oa - ob$. Suppose further that a circle be drawn midway between the inner and outer circles as indicated by the dotted line. Then the radius oc of this circle is equal to $r_m = \frac{R + r}{2}$; its length (circumference) is $2\pi r_m = 2\pi \times \frac{R + r}{2}$ $= \pi(R + r)$; multiplying this by the thickness t and length l, the product will be the volume of a flat plate having the same cubical contents as the tube. Or, since $t = R - r$,

$$V = 2\pi r_m\, tl = \pi(R + r)\,(R - r)$$

which is the same as formula (1). Letting $2r_m = d_m$ = diameter of middle circle,

$$V = \pi d_m tl \qquad (2)$$

In other words, the cubical contents of a hollow cylinder, pipe, or tube is equal to the continued product of $\pi = 3.1416$, the mean diameter, the thickness, and the length of the cylinder.

Example 1.—A cylindrical tank made of wrought iron, a cubic inch of which weighs .2778 lb., is to hold 1000 gallons; the tank is to stand with the axis vertical, and the diameter (inside) is to be the same as the height; what is the diameter of the tank? If the thickness of the shell is ½ in., what is its weight?

Solution.—Since the diameter equals the height, $d = l$ in formula (1), Art. **125**; hence, since there are 231 cu. in. in a gallon,

$V = \frac{\frac{1}{4}\pi d^2 d}{231} = \frac{\pi d^3}{924} = 1000$, or $d = \sqrt[3]{\frac{924000}{3.1416}} = 66.503$, say 66½ in. *Ans.*

The inside diameter is 66.5 in., and since the thickness is .5 in., the outside diameter is $66.5 + 2 \times .5 = 67.5$ in.; then, by formula (1), Art. **127,** the cubical contents of the shell is $V = \frac{\pi}{4} \times 66.5(67.5 + 66.5) \times 1 = 6998.7$ cu. in.; this multiplied by .2778, the weight of a cubic inch of wrought iron, is $6998.7 \times .2778 = 1944.24$, say 1944 lb. *Ans.*

Example 2.—Assuming that the shell in the last example is made by rolling a flat sheet, ½ in. thick, into a cylindrical form, what should be the size of the sheet?

Solution.—The shape of the sheet will be that of a rectangle, one side of which is equal to the height of the tank = 66.5 in., and the other side will be equal to the circumference of a circle that is midway between the inside and outside circles of a right section of the tank. The diameter of this circle is evidently equal to the inside diameter plus the thickness, or $66.5 + .5 = 67$ in., and its circumference is $3.1416 \times 67 = 201.49$, say 201½ in. Therefore, the sheet must be 201½ in. long and 66½ in. wide. *Ans.*

Note that the mean diameter of the two circles is $\frac{66.5 + 67.5}{2} = 67$ in., the same result as was obtained by adding the thickness to the inside diameter.

128. The term *cylinder* is not confined to solids having circular bases or whose right sections are circles; it is applied to solids whose bases have any shape whatever, except those classed as prisms, the elements of whose surfaces are all perpendicular to a right section. Such solids may all be generated by keeping a line in contact with the outline of a plane figure, then moving the line so that it touches every point of the plane figure, and at the same time, always remains parallel to a given right line. The outline of the plane figure is called the **directrix,** and the moving line is called the **generatrix.** In Fig. 80, *abcdefgh* is the directrix and $a'a$ is the generatrix. The generatrix moves over the directrix, always remaining parallel to the fixed line AB, and thus generates the cylindrical surface shown in the figure. While, strictly speaking, the directrix should always be a curve in order to apply the term cylinder to the surface generated, it may, nevertheless, be applied to those surfaces in which the generatrix consists of both straight lines and curves.

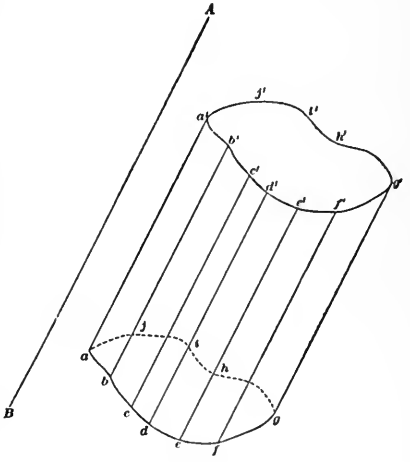

FIG. 80.

Keeping in mind this definition of a cylindrical surface and calling the solid that it bounds a cylinder, the general formulas previously given for the area and volume of a cylinder will apply in this case also.

EXAMPLE.—What volume of stock is displaced by a beater roll 48 in. wide and 60 in. in diameter that is immersed to a depth of 28 in. in the stock?

SOLUTION.—The outline of the stock displaced is a cylinder 48 in. long, with equal bases having the shape of a segment of a circle; and a right section of this cylinder is a segment of a circle, the radius of the circle being $60 \div 2 = 30$ in., and the height of the segment being 28 in. The volume displaced is equal to the area of the segment multiplied by the length of the cylinder.

To find the area of the segment, first calculate the chord, using formula (5), Art. **87,** and $c = 2\sqrt{(2 \times 30 - 28)28} = 59.867$ in.

Since the angle is very large, use formulas (4) and (6) of Art. **94** to find the length of the arc. From formula (4), $t' = .19740+$, and from formula

(5), $l = 90.25$ in. The area of the sector is $\frac{90.25 \times 30}{2} = 1353.75$ sq. in.; area of triangle $= \frac{59.867 \times 2}{2} = 59.867$ sq. in.; and area of segment $= 1353.75 - 59.87 = 1293.88$ sq. in. Therefore, volume of cylinder = volume of stock displaced $= 1293\ 88 \times 48 = 62{,}106$ cu. in. *Ans.*

129. Whenever a cylindrical tank is partly filled with a fluid of some kind and is so placed in position that its axis is neither vertical nor horizontal, an ungula is formed. The upper surface of the fluid is always a horizontal plane, and the intersection of this plane with the cylindrical surface forms either an ungula or what might be called a *frustum of an ungula.* Thus, referring to Fig. 81, which shows a cylindrical tank having one end higher

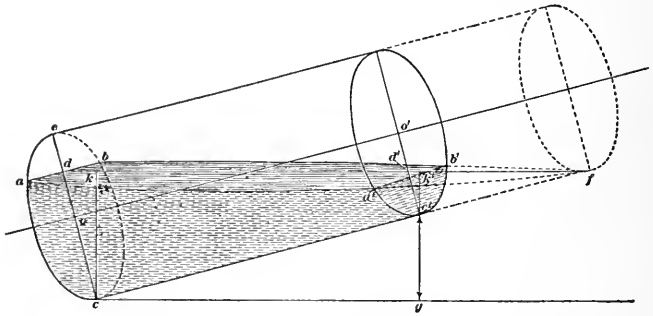

FIG. 81.

than the other and partly filled with some fluid (stock, for example), the upper surface $aa'b'b$ is a plane, level and parallel to the horizontal line cg. If the tank were extended until the plane of the top surface just touched the bottom of one end, as indicated by the dotted lines, the outline of the fluid contents would be the ungula f–acb. The part that is actually in the tank has, in this case, the outline $acbb'c'a'$, which may be called a frustum of the ungula f–acb, and its volume is evidently equal to the difference between the volume of the ungula f–acb and the volume of the ungula f–$a'c'b'$. The point f can be easily found when the length of the tank and the depth of the fluid at each end are known. Thus, let l = length of tank, $m = dc$ = depth at lower end, $n = d'c'$ = depth at upper end, and $x = c'f$ = the additional length of tank required; then, from the similar triangles fcd and $fc'd'$, $cf : c'f = cd : c'd'$. But $c'f = x$ and $cf = l + x$; hence, $l + x : x = m : n$, or

$$x = \frac{nl}{m - n}$$

EXAMPLE.—Referring to Fig. 81, suppose that the tank is 42 in. in diameter, 12 ft. 6 in. long, and that the upper end is 10 in. higher than the lower end; if partly filled with stock, so that the distance *ed*, measured along the tank bottom, is 14¼ in., what is the volume of stock in the tank?

SOLUTION.—Before the point *f* can be found, it is necessary to calculate the distance $c'd' = n$ in the formula above. Since $c'c$ = 12 ft. 6 in. = 150 in. and $c'g$ = 10 in., $cg = \sqrt{150^2 - 10^2} = 149.67$ in. Draw *ck* perpendicular to *df*; then *dkc* is a right triangle. Since *dc* is perpendicular to *cf*, angle *dck* = angle *c'cg*, because *ck* is perpendicular to *cg*, which is parallel to *df*. Consequently, triangles *dkc* and *c'gc* are similar, and $ck : cd = cg : c'c$, or $ck : 42 - 14.25 = 149.67 : 150$, from which $ck = 27.689$ in. = distance from stock level to horizontal line *cg*. Draw *c'k'* perpendicular to *df*; then, triangle *d'k'c'* is similar to triangle *dkc*, since the sides are parallel, and $k'g = kc = 27.689$ in. But $k'c' = 27.689 - 10 = 17.689$ in. Then, from the similar triangles *d'k'c'* and *c'gc*, $c'd' : 150 = 17.689 : 149.67$, or $c'd' = 17.728$ in. In the formula above, $l = 150$, $m = 42 - 14.25 = 27.75$, and $n = 17.728$; hence, $x = \dfrac{150 \times 17.728}{27.75 - 17.728} = 265.34$ in. = $c'f$, and $cf = 265.34 + 150 = 415.34$ in.

Calculating first the volume of the ungula *f–acb*, it is evident that the arc *acb* is greater than a semicircle, since *ed* is less than the radius *oe* = 42 ÷ 2 = 21 in. Hence, to find the length of the arc *acb*, find the length of the arc *aeb* and subtract it from the circumference of which it is a part. According to Art. **87**, $db^2 = ed \times dc$, or $db = \sqrt{14.25 \times 27.75} = 19.886$ in. = *a* in formula (1), Art. **126**. Since the arc is very large, use formula (2) of Art. **94** to find the length of the arc *aeb*. Here $t = \dfrac{14.25}{2 \times 19.886} = .35829$, and $l = \dfrac{40 \times 21 \times .35829(15 + 16 \times .35829^2)}{75 + 180 \times .35829^2 + 64 \times .35829^6} = 52.242$ in. The circumference of the circle is 42 × 3.1416 = 131.947 in.; therefore, arc *acb* = 131.947 − 52.242 = 79.705 in. = 2ϕ in formula (1), Art. **126**, or ϕ = 39.8525 in., say 39.853 in. Using this formula, $h = 415.34$, $b = 27.75$, $a = 19.886$, $r = 21$, $\phi = 39.853$, and

$$V' = \frac{415.34}{3 \times 27.75}[19.886\ (3 \times 21^2 - 19.886^2) + 3 \times 21(27.75 - 21)39.853$$

= 176,577 cu. in.

Next calculate the volume of the ungula *f–a'c'b'*. The arc *a'c'b'* is less than a semicircle, because *c'd'* is less than the radius *o'c'*. Here $d'b' = \sqrt{17.728(42 - 17.728)} = 20.744$; $t = \dfrac{17.728}{2 \times 20.744} = .42730$, and $\phi = \dfrac{l}{2} = \dfrac{40 \times 21 \times .4273(15 + 16 \times .4273^2)}{2 \times 75 + 180 \times .4273^2 + 64 \times .4273^6} = 29.711$ in.

Now using formula (1), Art. **126**, $h = 265.34$, $b = 17.728$, $a = 20.744$, $r = 21$, $\phi = 29.711$, and

$$V'' = \frac{268.13}{3 \times 17.728}[20.744(3 \times 21^2 - 20.744^2) + 3 \times 21(17.728 - 21) \times 29.711] = 61{,}831 \text{ cu. in.}$$

Finally, $V = V' - V'' = 176{,}577 - 61831 = 114{,}746$, say 114,750 cu. in., the volume of the stock in the tank. *Ans.*

The reader will find it excellent practice to work this entire example, performing all the operations herein indicated.

130. The Cone.—If a right triangle be revolved about one of its legs as an axis, the hypotenuse will generate a **conical** surface, and the triangle as a whole will generate a solid called a **cone.** Thus, referring to Fig. 82 let *soa* be a right triangle, right-angled at *o*, and suppose the triangle to be revolved about the leg *so*; then, the hypotenuse *sa*, and the triangle as a whole will generate the solid *s–aa′a″b*. The point *s* is called the **vertex** of the cone. Any right line drawn from *s* to the base *aa′a″b* is called an **element** of the cone, more properly, an element of the conical surface; thus, *sa*, *sa′*, *sa″*, etc. are elements of the cone in Fig. 82. The line *so* is the **axis** of the cone, and *o* is the center of the base of the cone. Any cone generated in this manner is a **cone of revolution;** and because the base is perpendicular to the axis, the cone is also called a **right cone.**

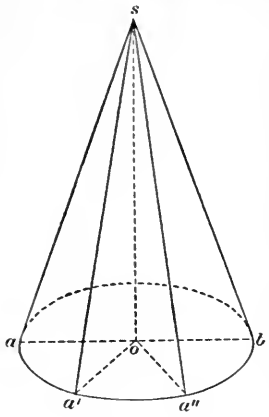

Fig. 82.

Let a right cone be laid on a plane, and suppose the line of contact of the plane and cone to be *sa*, Fig. 82; now roll the cone on

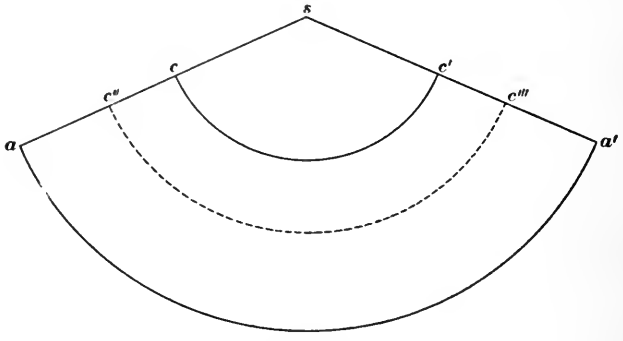

Fig. 83.

the plane, the vertex *s* remaining stationary. Each element of the cone will come into contact with the plane, and since they are all of the same length, the surface of contact thus generated will

be the circular sector saa', Fig. 83, the radius sa being an element of the cone, and the length of the arc aa' will be equal to the circumference of the base of the cone, or $2\pi \times oa$, Fig. 82. Since the area of a sector is equal to one-half the product of the radius and the length of the arc, it follows that the convex area of a right cone is equal to one-half the product of the perimeter of base of the cone and the length of an element. The length of an element is called the **slant height** of the cone; representing this by s, and letting r = the radius of the base, the convex area is

$$A = \tfrac{1}{2}s \times 2\pi r = \pi rs$$

131. If a cone be cut by a plane that intersects the element directly opposite the element first cut by the plane, the surface formed by the intersection of the plane and cone is an *ellipse*, except when the plane is perpendicular to the axis; in this latter case, the section is a *circle*, which is an ellipse having all its diameters equal. Referring to Fig. 84, the section $a'c'b'$, which is formed by the intersection of a plane perpendicular to the axis so of the cone, is a circle; the base, which is also perpendicular to the axis, is also a circle. In Fig. 85, the intersecting plane is not perpendicular to the axis so of the cone, but it intersects the element ab, which is directly (diametrically) opposite the element dc; hence, the section aed is an ellipse, and the base is also an ellipse.

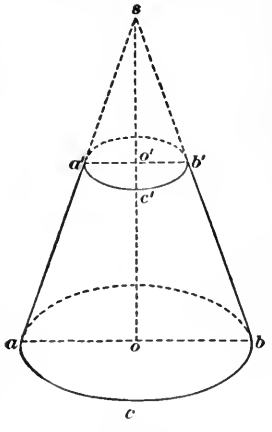

Fig. 84.

The altitude of a cone is the perpendicular distance between the vertex and the base. In the case of a right cone, the altitude is equal to the length of the axis; it equals so in Figs. 82 and 84. In the case of an oblique cone, Fig. 85, the base is not perpendicular to the axis, and the altitude is there indicated by H, the perpendicular distance between the base and the vertex.

The volume of any cone is equal to one-third the product of area of the base by the altitude. Let a = area of base and h = the altitude; then,

$$V = \tfrac{1}{3}ah \qquad (1)$$

If the cone is a cone of revolution and d = the diameter of

the base, the area of the base is $a = \frac{\pi}{4}d^2$; substituting this value of a in formula (1),

$$V = \frac{\pi}{12}d^2h = .2618d^2h \qquad (2)$$

If the base is an ellipse, as in Fig. 85, let $D = bc$, the long diameter, and $d = gf$, the short diameter; then, the area of the base is $\frac{\pi}{4}Dd = a$. Substituting this value of a in formula (1),

$$V = \frac{\pi}{12}Ddh = .2618Ddh \qquad (3)$$

EXAMPLE.—Making no allowance for thickness, what is the area of a piece of thin sheet metal that will just cover the convex surface of a cone with a circular base having a diameter of 33 in. and an altitude of 45 in.? If made of wood weighing 48 lb. per cubic foot, what is the weight of the cone?

SOLUTION.—The area of the sheet metal will be the same as the area of the cone; hence, using the formula of Art. **130**, $A = \pi \times \frac{33}{2} \times \sqrt{45^2 + \left(\frac{33}{2}\right)^2}$ = 2484.5 sq. in. *Ans.* Here the radius is 33 ÷ 2, and the slant height is the hypotenuse of a right triangle, one leg of which is the radius and the other leg is the altitude.

To find the weight, it is first necessary to calculate the volume. Applying formula (2), above, $V = .2618 \times 33^2 \times 45 = 12829.5$ cu. in. Since a cubic foot weighs 48 lb., the weight is evidently $12829.5 \times \frac{48}{1728} = 356.4$, say 356 lb. *Ans.*

132. A frustum of a cone is that portion of the cone included between the base and a plane parallel to the base and intersecting the cone. In Fig. 84, $a'abb'$ is a frustum of the cone $s - ab$; in Fig. 85, $abcd$ is a frustum of the cone $s - bgcf$. In both cases, the two bases are parallel; but in Fig. 84, both bases are perpendicular to the axis, while in Fig. 85, they are oblique to the axis. It is apparent that a frustum of a right cone is always a right frustum, since if one base is perpendicular to the axis (as it must be in the case of a right cone) the other base must also be perpendicular to the axis.

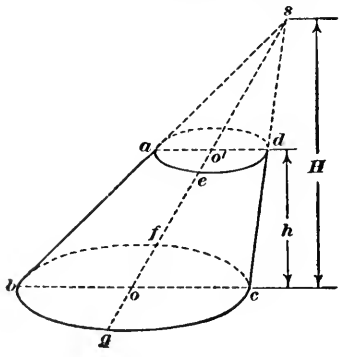

FIG. 85.

If a frustum of a right cone be rolled on a plane surface, the area thus generated on the plane, called the development of the

frustum, will have the outline $caa'c'$, Fig. 83, which may be considered to be the development of the frustum in Fig. 84. Here sa corresponds to the element sa, Fig. 84, and sc corresponds to sa'. The area $caa'c'$ is equal to the sector saa' − sector scc'. Letting R = radius of lower base and r = radius of upper base, perimeter of lower base = $2\pi R$ = arc aa'; perimeter of upper base = $2\pi r$ = arc cc'; then *area of frustum is equal to one-half the sum of the circumferences of its bases multiplied by the slant height of the frustum.* Let s = the slant height = $a'a$, Fig. 84, then $A = \frac{1}{2}(2\pi R + 2\pi r)s$, from which

$$A = \pi s(R + r) = \frac{\pi}{2}s(D + d)$$

When D and d are the diameters of the bases.

133. *The volume of any frustum of a cone is equal to one-third the altitude multiplied by the sum of the areas of the upper base, the lower base, and the square root of the product of the areas of the bases.*

Thus, let a' = the area of the lower base, a'' = the area of the upper base, and h = the altitude = h in Fig. 85; then,

$$V = \tfrac{1}{3}h(a' + a'' + \sqrt{a'a''}) \qquad (1)$$

If the bases are circles, let D = the diameter of the lower base and d = the diameter of the upper base; then, $a = \frac{\pi}{4}dD^2$, $a'' = \frac{\pi}{4}d^2$, and substituting in formula (1) and reducing,

$$V = .2618h(D^2 + d^2 + Dd) \qquad (2)$$

If the bases are not perpendicular to the axis, they are ellipses; letting D' and d' be the long and short diameters of the lower base and D'' and d'' the long and short diameters of the upper base, $a' = \frac{\pi}{4}D'd'$, $a'' = \frac{\pi}{4}D''d''$, and substituting in formula (1) and reducing,

$$V = .2618h(D'd' + D''d'' + \sqrt{D'\ D''d'd''}) \qquad (3)$$

EXAMPLE.—Find the weight of the plater roll shown in Fig. 86; all right sections are circles; the roll is solid; and it is made of east iron weighing 450 pounds per cubic foot.

SOLUTION.—The parts marked A and E are cylinders having the same diameter, 8 in., and are therefore equivalent to a single cylinder having a diameter of 8 in. and a length of 9 + 14.5 = 23.5 in. The part marked C is a cylinder 17 in. in diameter and 36 in. long; the parts marked B and D are frustums of cones whose bases have diameters of 12 in. and 17 in. and an altitude of 3 in. The volume of the roll will be the sum of the volumes of the parts A, B, C, D, and E. The volume of the cylinders may be calcu-

lated by formula (2), Art. **125,** and the volume of the frustums by formula (2), above.

Volume of A and E $= .7854 \times 8^2 \times (9 + 14.5) =$ 1181 cu. in.
Volume of C $= .7854 \times 17^2 \times 36 =$ 8171
Volume of B and D $= .2618 \times 3(17^2 + 12^2 + 17 \times 12) \times 2 =$ 1001

Total volume = 10,353 cu. in.

The number of cubic feet is $\frac{10,353}{1728}$, and the weight of the roll is $\frac{10,353}{1728} \times 450 = 2696$ lb. *Ans.* Since the constant 450 is given to only three significant figures, the various results were limited to four significant figures.

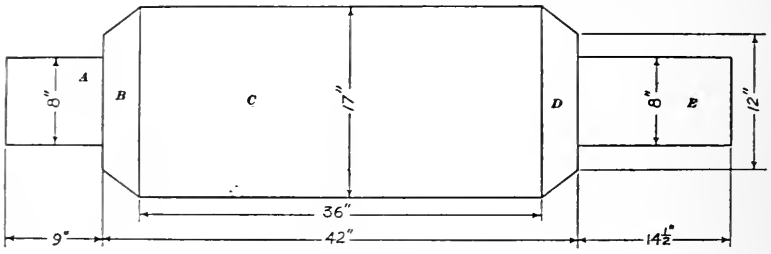

Fig. 86.

Example 2.—Referring to Fig. 85, suppose the long and short diameters of the lower base are 16½ in. and 11 in., and the long and short diameters of the upper base are 6.6 in. and 4.4 in.; if the altitude is 8 in., what is the volume of the frustum?

Solution.—Applying formula (3), above, $V = .2618 \times 8(16.5 \times 11 + 6.6 \times 4.4 + \sqrt{16.5 \times 11 \times 6.6 \times 4.4}) = 5930$ cu. in. *Ans.*

134. The Sphere.—If a semicircle be revolved about its diameter, the surface thus generated is called a **spherical surface;** the solid that is bounded by a spherical surface is called a **sphere.** In Fig. 87(*a*), suppose the semicircle *ras* to be revolved about its diameter *rs*; it will then generate a spherical surface, and the line *rs* is called the **axis** of the sphere. The middle point *o* of the axis is the **center** of the sphere. Any right line drawn from the center *o* and ending in the spherical surface, as the line *og*, is the **radius** of the sphere, and it is evident that all radii of a sphere are equal, since they are equal to the radius of the semicircle that generates the sphere. Any line that passes through the center and is terminated by the spherical surface, as the line *rs*, is a **diameter** of the sphere, and any diameter may be taken as the axis. The points where the axis intersects the spherical surface are called the **poles;** in Fig. 87(*a*), *r* and *s* are the poles.

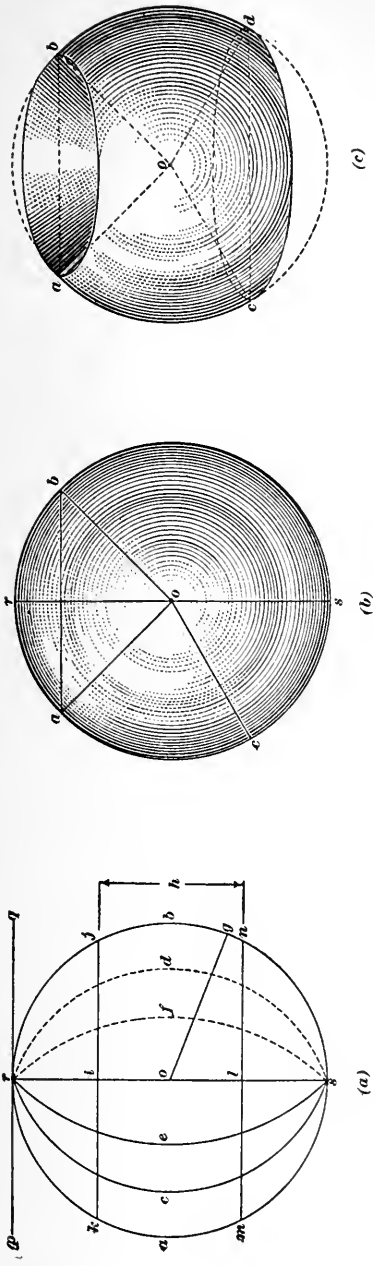

FIG. 87.

If a sphere be intersected by a plane, the figure thus formed will be a circle; and if the plane passes through the center of the sphere, the circle is called a **great circle;** otherwise, it is called a **small circle.** In (*a*) Fig. 87, *rasb*, *rcsd*, *resf*, etc. are great circles; the circles represented by the lines *kj* and *mn* are small circles. All great circles are equal; but a small circle may have any value between that of a great circle and 0. Assuming the earth to be a perfect sphere, the meridians of longitude are all great circles, while all the parallels of latitude (except the equator) are small circles.

135. *The area of a sphere is equal to the area of four great circles.* Let r = the radius of a great circle = radius of the sphere, and $d = 2r$ = the diameter; then,

$$A = 4\pi r^2 = \pi d^2 = 3.1416d^2 \quad (1)$$

The volume of a sphere is equal to its area multiplied by one-third the radius $= 4\pi r^2 \times \frac{1}{3}r$, or

$$V = \tfrac{4}{3}\pi r^3 = \tfrac{1}{6}\pi d^3 = .5236d^3 \quad (2)$$

EXAMPLE.—A certain manufacturer states that a can of his paint will cover 100 square feet; how many cans will be required to give two coats of paint to a sphere 100 in. in diameter? If

the sphere were hollow and its inside diameter were 100 in. how many gallons would it hold?

SOLUTION.—Applying formula (1) to find the area, which multiply by 2 since two coats are to be applied,

$A = 3.1416 \times 100^2 \times 2 = 62{,}832$ sq. in. $= 62{,}832 \div 144 = 436+$ sq. ft. Therefore, the number of cans of paint required is $436 \div 100 = 4.36$, say $4\frac{1}{2}$ cans. *Ans.*

To find the number of gallons that the sphere will hold, apply formula (2) to find the volume, which divide by 231, the number of cubic inches in a gallon; thus,

$V = .5236 \times 100^3 = 523{,}600$ cu. in., and $523600 \div 231 = 2266\frac{2}{3}$ gal. *Ans.*

136. If a sphere be intersected by two parallel planes, the part included between the planes is called a **spherical segment.** Referring to (*a*), Fig. 87, *kj* and *mn* represent parallel planes, and *kamnbj* is a spherical segment. It will be noted that a spherical segment is somewhat similar to a frustum of a cone, and has two bases, *kj* and *mn*. If, however, one plane is tangent to the sphere, as *pq*, the spherical segment has but one base. In (*a*), Fig. 87, *rkij* and *rkmnj* are spherical segments of one base. The perpendicular distance between the bases is the altitude of the spherical segment; thus, *il* is the altitude of the spherical segment *kmnj*, *ir* is the altitude of the spherical segment *rkij*, etc.

The convex surface of a spherical segment is called a **zone;** thus, the convex surface of *kmnj* is a zone of two bases, and the convex surface of *rkij* is a zone of one base. Note that a zone means a surface—not a solid; there is no such thing as the *volume* of a zone.

137. *The area of a zone is equal to the circumference of a great circle of the sphere of which the zone is a part multiplied by the altitude of the zone.* The altitude of a zone is the same as the altitude of the spherical segment. Let r = the radius of the sphere, d = the diameter of the sphere, and h = the altitude of the zone; then,

$$A = 2\pi rh = \pi dh \qquad (1)$$

The volume of a spherical segment is equal to half the sum of its bases multiplied by its altitude **plus** *the volume of a sphere of which that altitude is the diameter.* Thus, letting the letters represent the same quantities as before, and letting r_1 and d_1 be the radius and diameter of one base, and r_2 and d_2 the radius and diameter of the other base,

$$V = \tfrac{1}{2}\pi(r_1^2 + r_2^2)h + \tfrac{1}{6}\pi h^3 = .5236h[3(r_1^2 + r_2^2) + h^2] \qquad (2)$$

Also,
$$V = .1309h[3(d_1^2 + d_2^2) + 4h^2] \qquad (3)$$

If the spherical segment have but one base, as *rkij*, Fig. 87(*a*), make $r_2 = 0$ in formula (2), and

$$V = .5236h(3r_1^2 + h^2) = .1309h(3d_1^2 + 4h^2) \qquad (4)$$

138. Referring to (*b*) and (*c*), Fig. 87, suppose a sphere to be generated by revolving the semicircle *racs* about its diameter *rs*; then, that part of the sphere that is generated by any *sector* of the semicircle is called a **spherical sector.** In (*b*), Fig. 87, the spherical sector *raob* is generated by the sector *aor* of the semicircle; the remainder of the sphere, *sboa*, is also a spherical sector. In (*c*), Fig. 87, *aobdoc* is a spherical sector generated by the sector *aoc*. The zone forming the convex surface of the spherical sector is called the **base** of the sector. In (*b*), Fig. 87, the zone *abr* is the base of the spherical sector *raob*; and in (*c*), Fig. 87, the zone *abdc* is the base of the spherical sector *aobdoc*.

The volume of a spherical sector is equal to the area of the zone that forms its base multiplied by one-third the radius of the sphere. Since the area of a zone is $2\pi rh$, the area of a spherical sector is $2\pi rh \times \frac{1}{3}r$, and

$$V = \frac{2\pi}{3}r^2h = 2.0944r^2h$$

Example 1.—Fig. 88 shows a tank 28 in. long, 12 in. wide, and filled with water to a depth of 16 in. A ball 8½ in. in diameter is partly submerged in the water, the vertical depth, measured on the axis being 6 in. To what additional height, x, will the water level be raised by the ball?

Solution.—Let x = the additional height of the water due to the ball; this height will be the same as though an amount of water equal in volume to that displaced by the ball had been added to the water in the tank, and this volume is equal to the volume of a spherical segment of one base having an altitude of 6 in. the diameter of the sphere being 8.5 in. To find the radius of the base, let *CBDA* be a section of the ball, Fig. 89, taken through the center; then, *CBDA* is a great circle, and *CD* is the axis of the sphere. *AB* is the water level and is 6 in. from the lowest point *D* of the ball. *AB* is also the diameter of the base of the spherical segment *ADB*, and in Fig. 89, is the chord of the arc *ACB*. One-half of $AB = AE$ is the radius of the base of the spherical segment. Now applying the principle of Art. **87,** $AE^2 = r_1^2 = CE \times ED = (8.5 - 6) \times 6 = 15$. Substituting this value of r_1^2 in formula (4), Art. **137,**

$$V = .5236 \times 6(3 \times 15 + 6^2) = 254.47 \text{ cu. in.}$$

which is the volume of that part of the ball submerged in the water. The amount of water in the tank is $28 \times 12 \times 16 = 5376$ cu. in. Adding to this the volume of the spherical segment, $5376 + 254.47 = 5630.47$ cu. in. Representing the depth of the water after the ball has been placed in it by d, the volume occupied by the water and the submerged part of the ball is

$28 \times 12 \times d = 5630.47$; from which, $d = 5630.47 \div (28 \times 12) = 16.7574 -$ in. Hence, the ball raised the water level $16.7574 - 16 = .7574$ in. $= x$. *Ans.*

If only the value of x had been desired, all that would be necessary to ascertain it, is to divide the volume of the spherical segment by the area of

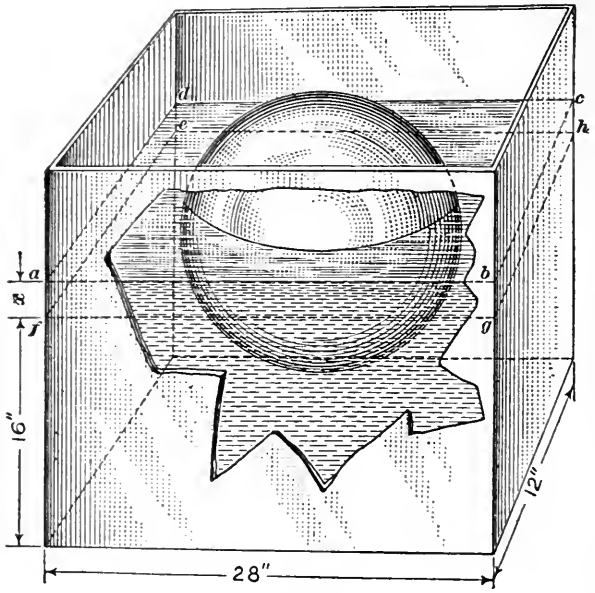

Fig. 88.

the bottom of the tank, since the volume of the prism *abcdefgh*, Fig. 88, must be equal to the volume of the submerged part of the ball, and the area of the base of the prism is the same as the area of the bottom of the tank. Hence, $254.47 \div (28 \times 12) = .7574 -$ in., as before.

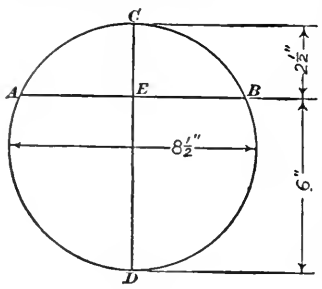

Fig. 89.

Example 2.—A ball 15 ft. in diameter is to be painted in two colors in such a manner that the top and bottom zones will be of one color and the middle zone of another color, all three zones having the same altitude. If the middle zone is white and the other two black, which color will require the most paint, and what will be the area of the surfaces covered?

Solution.—The altitude of each zone is $15 \div 3 = 5$ ft. By formula (1), Art. **137**, the area of a zone is πdh; since d and h are the same for all three zones, their areas are equal, and

$$A = 3.1416 \times 15 \times 5 = 235.62 \text{ sq. ft.}$$

Therefore, the area to be covered with the white paint is 235.62 sq. ft., and the area to be covered with the black paint is 235.62 × 2 = 471.24 sq. ft. *Ans.*

EXAMPLES

(1) Fig. 90 shows an iron casting. The part marked *C* is 8 in. in diameter and 1 in. thick; part *D* is 5 in. in diameter; part *B* is 10 in. square and 1½ in. thick; there are four strengthening webs marked *A*, which may be considered as triangular prisms, neglecting the small curve formed where they join the middle cylinder.

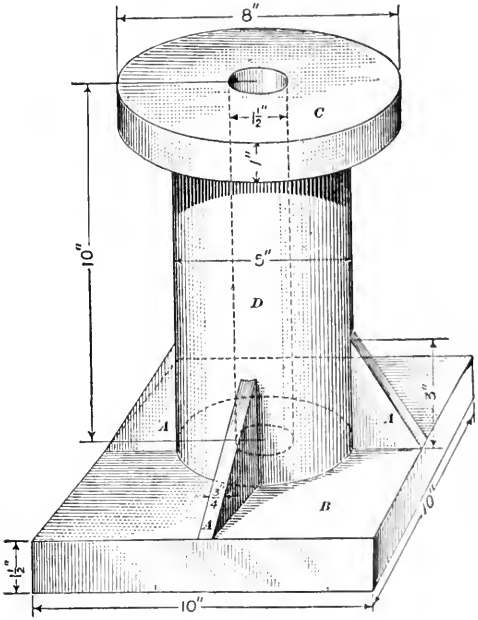

Fig. 90.

Taking the weight of a cubic inch of cast iron as .2604 lb., what is the weight of the casting? The height over all is 10½ in., and a hole 1½ in. in diameter passes through the center of the casting. *Ans.* 95.8 lb.

(2) A wooden ball 18 in. in diameter has a 9-inch hole through it, the axis of the hole coinciding with the axis of the ball; what was the original volume of the ball, and what is the volume after the hole has been placed in the ball? Note that the part removed when the hole was bored is a cylinder and two spherical segments of one base, both segments being equal.

Ans. 3054− cu. in.; 1983+ cu. in.

(3) One side of a stock chest 12 ft. high is shaped like a semicircle with a radius of 5 ft. 2 in.; the side opposite is a right line 10 ft. 4 in. long and is

joined to the semicircular part by right lines 7 ft. long, the angle between the long side and the two short sides being a right angle. If the chest stands with its axis vertical, what is its capacity in cubic feet when filled to within 8 in. from the top? *Ans.* 1295 cu. ft.

(4) What is the capacity in United States gallons of a vertical cylindrical stock chest 11 ft. 10 in. high and 14 ft. inside diameter, if it is filled to within one foot of the top, no allowance being made for the displacement of the agitator? *Ans.* 12,475 gal.

(5) If the consistency of the stock is 275 pounds per 1000 U. S. gallons in the last example, what is the dry weight of the contents of the stock chest? *Ans.* 3431 lb.

(6) Find the solid contents in cubic feet of the following logs:

24 logs 16 ft. long, 18 in. at the large end, 15 in. at small end.
36 logs 15 ft. long, 17 in. at the large end, 13 in. at small end.
38 logs 12 ft. long, 15 in. at the large end, 12 in. at small end.
28 logs 20 ft. long, 18 in. at the large end, 14 in. at small end.

When calculating the cubical contents of logs, it is customary to take $\pi = 3$, because the logs are seldom, if ever, exactly round, and it is not only useless to take $\pi = 3.1416$, but the results will be inaccurate.

Ans. 339,605 cu. ft.

(7) A cylindrical tank 28 ft. long and 68 in. in diameter lies with its axis horizontal; how many gallons will it hold when filled to within 7.5 in. of the top? *Ans.* 4969 gal.

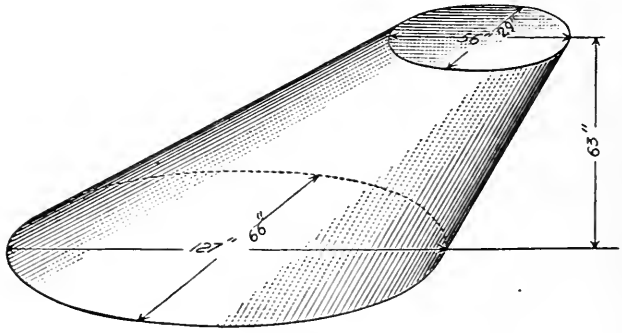

FIG. 91.

(8) A tank reservoir that has the general shape of a frustum of a right cone is 16 ft. in diameter at base, 14 ft. 9 in. in diameter at top, and is 18 ft. high; how many gallons will it hold when filled to within 14 in. of the top? *Ans.* 23,392 gal.

(9) A pipe 3¾ in. inside diameter discharges water at the rate of 5.62 ft. per sec.; how many gallons will it discharge in one hour? The amount discharged is evidently equal to the amount required to fill a pipe of the same cross-sectional area and having a length equal to $5.62 \times 60 \times 60$ ft. *Ans.* 967.3 gal.

(10) Find the volume of a frustum of a cone having the dimensions indicated in Fig. 91. *Ans.* 130.72 cu. ft.

SIMILAR FIGURES

139. Let $ABCDE$, Fig. 92, be any polygon. From any point O within the polygon, draw lines, called *rays*, to the vertexes of the polygon; and on these rays, lay off distances OA', OB', OC', etc. in such manner that the ratios $\frac{OA'}{OA} = \frac{OB'}{OB} = \frac{OC'}{OC} =$ etc. For instance, suppose $\frac{OA'}{OA} = \frac{2}{3}$; then, $OA' = \frac{2}{3}OA$, $OB' = \frac{2}{3}OB$, $OC' = \frac{2}{3}OC$, etc. Joining the points A', B', C', etc. by right lines, another polygon $A'B'C'D'E'$ is obtained that is said to be **similar** to the polygon $ABCDE$. The angles at the vertexes of

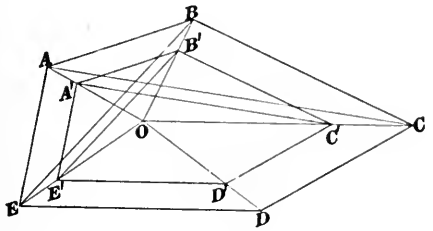

FIG. 92.

the two polygons that are similarly placed are equal and the corresponding sides are proportional; that is, angle A = angle A', angle B = angle B', etc., and $\frac{A'B'}{AB} = \frac{B'C'}{BC} = \frac{C'D'}{CD} =$ etc. Hence, *when two polygons are so related that their corresponding angles are equal and their corresponding sides are proportional, they are similar.*

The point O from which the rays are drawn may be taken anywhere in plane of the figure—either within or without the polygon; in fact, it may be taken outside the plane of the figure, provided the planes of the two figures are parallel, as in Fig. 93. Here the figure $ABCDEF$ is similar to the figure $A'B'C'D'E'F'$, and the planes of these figures are parallel. If the vertexes of the polygons are connected by lines $A'A$, $B'B$, etc., they form the edges of a prismoid. If the rays OA, OB, etc. be extended sufficiently far to enable another prismoid to be formed and the edges of the second prismoid are proportional to the first, then the two *solids* are similar.

In the case of similar plane figures or similar solids, lines that are similarly placed are called **homologous**; thus, in similar polygons, the corresponding sides are homologous. For instance, in

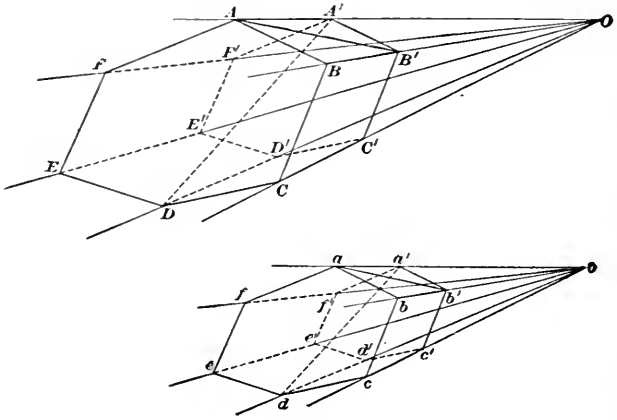

Fig. 93.

Fig. 92, AB and $A'B'$, BC and $B'C'$, etc. are homologous sides; AC and $A'C'$, EB and $E'B'$, etc. are homologous lines. In Fig. 93 if there is another solid similar to the one there shown, as the solid $a'b'c'd'e'f'abcdef$, then the edges $A'A$ and $a'a$, $B'B$ and $b'b$, etc. are homologous; and lines similarly placed, as $B'A$ and $b'a$, $A'D$ and $a'd$, etc. are homologous lines.

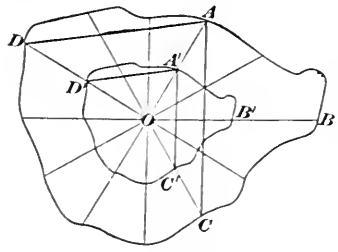

Fig. 94.

140. Suppose a plane figure to be irregular in shape, as $ABCD$, Fig. 94; if from a point within it, a sufficient number of rays be drawn, and points on these rays be taken such that $\frac{OA'}{OA} = \frac{OB'}{OB} = \frac{OC'}{OC} = \text{etc.}$, then the figure $A'B'C'D'$ will be similar to the figure $ABCD$. Any lines similarly placed in the two figures will be homologous lines; thus, the lines DA and $D'A'$, AC and $A'C'$, etc. are homologous lines.

141. *Given any two similar plane figures, their perimeters are proportional to the lengths of any two homologous lines;* hence, if

the perimeter of one of two similar figures is known and the lengths of any two homologous lines are also known or can be measured, the perimenter of the other figure can be found by proportion. Let p and P be the perimeters and l and L be the lengths of two homologous lines; then,

$$P : p = L : l$$

From which, $$P = \frac{pL}{l} \text{ and } p = \frac{Pl}{L}.$$

All regular polygons and circles are similar; two ellipses are similar when their long and short diameters are proportional; two circular segments are similar when the central angles subtended by their ares are equal; etc.

Example.—A cylindrical tank lies in a horizontal position and is filled with water to a depth of 31 in. If the inside diameter of the tank is 40 in. and it is known that the wetted perimeter of a tank 6 in. in diameter and similarly filled is 12.919 in., what is the wetted perimeter of the given tank?

Solution.—The wetted perimeter is the circular arc touched by the water. Since the two tanks are similarly filled, the depths are homologous lines, the diameters are also homologous lines, and the wetted perimeters are similar. Letting x = the wetted perimeter sought, $x : 12.919 = 40 : 6$; whence, $x = \frac{12.919 \times 40}{6} = 86.128$, say $86\frac{1}{8}$ in. *Ans.*

142. *The areas of any two similar plane figures or solids are proportional to the* squares *of any two homologous lines.* Since all circles are similar, the areas of any two circles are to each other as the squares of their radii, the squares of their diameters, the squares of the chords of equal ares, etc. In Fig. 94, if the area of $ABCD$ be represented by A and the area of $A'B'C'D'$ by a, and the lengths of the homologous lines AC and $A'C'$ are known and are represented by L and l,

$$A : a = L^2 : l^2$$

from which, $$A = a \times \frac{L^2}{l^2}, \text{ and } a = A \times \frac{l^2}{L^2}.$$

Two cylinders are similar when their altitudes are proportional to any two homologous lines and the bases are similar; two cones are similar when the base of one is similar to the base of the other and the altitudes are proportional to any two homologous lines; two prisms are similar when the bases are similar and the altitudes are proportional to any two homologous edges or lines of the prisms; etc. Therefore, if A is the area of the surface of a solid and a is the area of a similar solid (either the convex area or the entire area of the solids) and L and l are the lengths

of any two homologous lines (the diameter or altitude of a cylinder, prism, or cone, or the diameter of either base of a frustum of a cone, or the length of any edge of a prism is a homologous line when compared with a similar solid), then

$$A : a = L^2 : l^2$$

EXAMPLE.—Referring to the example of Art. **131**, what is the area of a piece of sheet metal that will exactly cover a cone having a circular base that is 26.4 in. in diameter and whose altitude is 36 in.?

SOLUTION.—Since the area of a cone having a diameter of base of 33 in. and an altitude of 45 in. is 2484.5 sq. in., and since $\frac{26.4}{33} = \frac{36}{45} = .8$, the cones are similar, and letting A = the area of the cone here being considered, $A : 2484.5 = 36^2 : 45^2$, from which $A = 2484.5 \times \frac{36^2}{45^2} = 2484.5 \left(\frac{36}{45}\right)^2$ $= 2484.5 \left(\frac{4}{5}\right)^2 = 2484.5 \times .8^2 = 1590.1 -$ sq. in. *Ans.*

If the area had been calculated by the formula of Art. **130**,

$A = \pi \times \frac{26.4}{2} \times \sqrt{36^2 + \left(\frac{26.4}{2}\right)^2} = 1590.1 -$, the same result as before.

143. *The volumes of any two similar solids are to each other as the* **cubes** *of their homologous lines.* Let V = the volume of one solid and v = the volume of a similar solid; then, if L and l are homologous lines,

$$V : v = L^3 : l^3$$

from which,

$$V = v \times \frac{L^3}{l} = v \left(\frac{L^3}{l^3}\right).$$

144. Any cylinder or prism, any pyramid or cone, any frustum of a pyramid or cone, and any sphere or spherical segment may be regarded as a prismoid, and its volume may be calculated by the prismoidal formula. For instance, in the case of a cone, one base of the prismoid is 0; hence, comparing the middle section with the base, a homologous line of the base will be twice as long as the corresponding homologous line of the middle section, and the area of the base will be $2^2 = 4$ times the area of the middle section. Letting a = area of the base, the area of the middle section is $\frac{a}{4}$; and by the prismoidal formula, V $= \frac{1}{6}h\left(a + 4 \times \frac{a}{4} + 0\right) = \frac{1}{3}ah$, which is the same as formula (1), Art. **131**. In the case of a sphere, both ends of the prismoid are points and their areas are 0; the area of the middle section is πr^2 and the altitude is $2r$. Therefore, by the prismoidal formula, $V = \frac{1}{6} \times 2r(0 + 4 \times \pi r^2 + 0) = \frac{4}{3}\pi r^3$, which is the same as formula (2), Art. **135**.

If the cross sections of one prismoid are proportional to similar cross sections of another prismoid, but the altitudes of the prismoids are not in the same proportion, the volumes of the prismoids are proportional to the products of the areas of the cross sections by the altitudes. For instance, suppose that the dimensions of the frustum of two cones are known, that the cross sections of one frustum are proportional to the cross sections similarly placed in the other frustum, but that the ratio of the altitudes (or of any homologous lines not in the section or in planes parallel to the sections) is not the same as the ratio of the cross sections; then letting A and a be the areas of any two homologous sections and H and h the altitudes, $V : v = A \times H : a \times h$. Further, letting L and l be any two homologous lines in the sections whose areas are A and h, $\frac{A}{a} = \left(\frac{L}{l}\right)^2$. From the foregoing proportion, $V = v\left(\frac{A}{a}\right)\frac{H}{h}$. Substituting the value of $\frac{A}{a}$

$$V = v\left(\frac{L}{l}\right)^2\frac{H}{h}$$

and

$$v = V\left(\frac{l}{L}\right)^2\frac{h}{H}$$

145. Suppose that through any point O in any solid, three planes are passed perpendicular to one another, as the planes AB, CD, and EF, Fig. 95; these planes intersect in the right lines mn, pq, and rs. If now measurements are taken in these planes parallel to the intersecting lines and these measurements are proportional to similar measurements taken in another body, and this proportion is the same, no matter where the point O may be situated, the two solids are similar, and their volumes are proportional to the products of any set of three homologous lines. For instance, suppose the point O be located at a corner of the base of a rectangular parallelopiped; then, a measurement parallel to rs, mn, and pq, will correspond to the length, breadth, and thickness of the parallelopiped, which may be represented by L, B, and T, respectively. Homologous lines of a similar parallelopiped may be designated by l, b, and t, and

$$V : v = L \times B \times T : l \times b \times t$$

EXAMPLE.—Referring to example 2, Art. **133**, what is the volume of a similar frustum of a cone having an altitude of 13½ in.?

SOLUTION.—Since the frustums are similar, the volumes of the two frus-

tums are proportional to the cubes of any two homologous lines, say their altitudes; then, $V : v = H^3 : h^3$, or $V : 5930 = 13.5^3 : 8^3$, and $V = 5930\left(\frac{13.5}{8}\right)^3$ = 28497 cu. in. *Ans.*

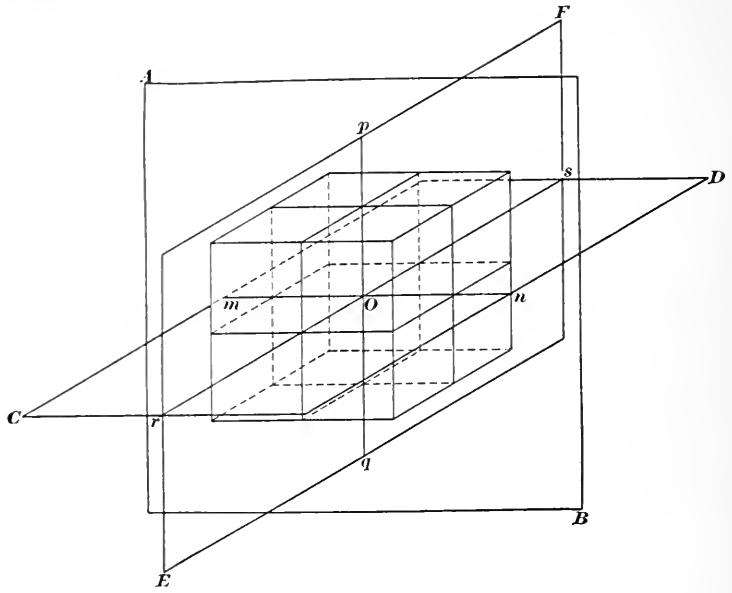

Fig. 95.

Example 2.—Suppose that the bases of the frustums in the preceding example had been similar, the diameters of the upper bases being 11 in. and 14¼ in., while the altitudes are 8 in. and 12⅜ in. respectively; what is the volume of the latter frustum?

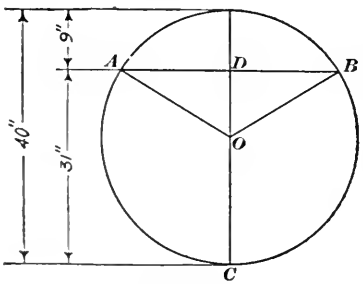

Fig. 96.

Solution.—The ratio of the bases (and of any section parallel to the bases is $14.25 \div 11 = 1.3-$; the ratio of the altitudes is $12.375 \div 8 = 1.5+$; hence, the volumes are proportional to the bases multiplied by the altitudes, and $V = v\left(\frac{L}{l}\right)^2\frac{H}{h} = 5930 \times \left(\frac{14.25}{11}\right)^2 \times \frac{12.375}{8} = 15394$ cu. in. *Ans.*

Example 3.—Referring to the example of Art. **141**, suppose the 40-inch tank is 14 ft. 5 in. long and the 6-inch tank is 3 ft. 8 in. long; how many gallons does each hold when filled to the depth specified?

Solution.—A cross section of the 40-inch tank is shown in Fig. 96. The wetted perimeter is the length of the arc ACB, which was found to be

86.127 in. long. The area of the segment ACB is equal to the area of the sector $ACBO$ + area of triangle AOB. Using the principle of Art. **87**, $AD = \sqrt{9 \times 31} = 16.703$ in. Area of sector $= \frac{1}{2} \times 861.27 \times 20 = 86.127$ sq. in. Area of triangle $= 16.703 \times (20 - 9) = 183.73$ sq. in. Area of segment $= 861.27 + 183.73 = 1045$ sq. in. Hence, volume of water in 40-inch tank is, since 14 ft. 5 in. = 173 in., $1045 \times 173 = 180785$ cu. in. $= 180785 \div 231 = 782.6+$ gal. *Ans.*

To find the volume of the water in the 6-inch tank, use the proportion given above, and $782.6 : v = 40^2 \times 173 : 6^2 \times 44$, or $v = 782.6 \left(\frac{6}{40}\right)^2 \times \frac{44}{173} = 4.4785-$ gal. *Ans.*

SYMMETRICAL FIGURES

146. Two figures are said to be **symmetrical** with respect to a line, called the **axis of symmetry,** when any perpendicular to the axis that is limited by the outline of the figure is bisected by the axis. Thus, referring to Fig. 97, if the perpendiculars $A'A$, $B'B$, $C'D$, etc. are bisected by the line mn, mn is an axis of symmetry, and the two figures $ABCDEA$ and $A'B'C'D'E'A'$ are symmetrical. Now suppose that $FBCDG$ and $FB'C'D'G$ are symmetrical with respect to the axis mn, the sides FG coinciding; then the figure $FBCDGD'C'B'F$ is said to have an axis of symmetry.

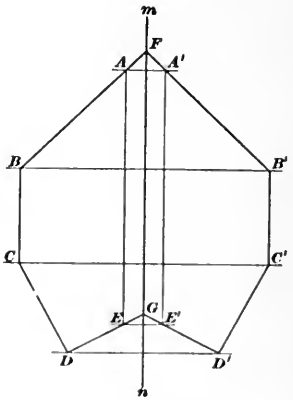

Fig. 97.

If two figures are symmetrical, they are evidently equal; thus, in Fig. 97, $ABCDE = A'B'C'D'E'$. Consequently, if any figure have an axis of symmetry, this axis *bisects* the figure; hence, $FBCDG = FB'C'D'G' =$ one-half $FBCDGD'C'B'F$. It is also evident that if the plane of the paper be folded on the line mn, A will fall on A', B will fall on B', C will fall on C', etc., and $ABCDE$ will be superposed on and will coincide with $A'B'C'D'E'$. Also, the left half of $FBCDGD'C'B'F$ will be superposed on and will coincide with the right half; therefore, *if a plane figure can be so folded that every point on one side of the line of folding will coincide with a point on the other side, the line of folding will be an axis of symmetry and will divide the figure into two equal parts.*

147. If the figure have two axes of symmetry, as *mn* and *pq*, Fig. 98, their point of intersection *O* is called the **center of symmetry,** and *the center of symmetry is the geometrical center of the figure.* Every regular polygon has a center of symmetry, which may be

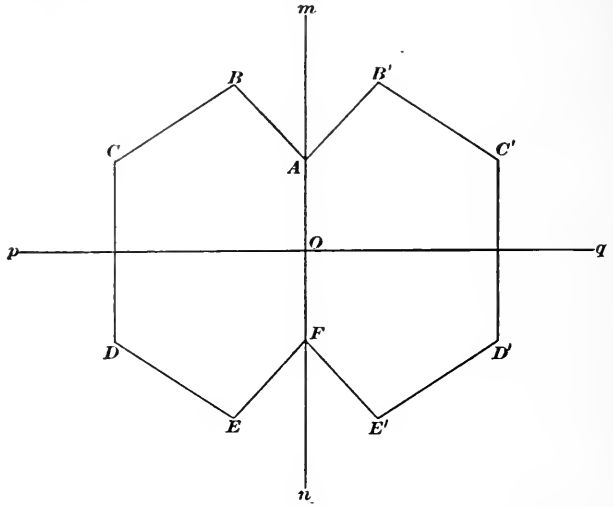

FIG. 98.

found by drawing lines from the vertexes to the opposite vertexes, when the polygons have an *even* number of sides, as 4, 6, 8, etc.; but, if the polygons have an *odd* number of sides, the axes of symmetry are found by drawing lines from the vertexes perpendicular to the sides opposite them. If the number of sides is even,

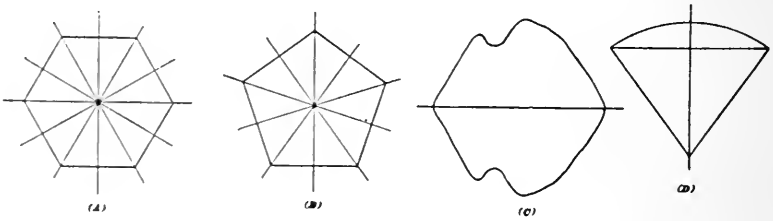

FIG. 99.

a line drawn perpendicular to any side at its middle point will bisect the opposite side and be an axis of symmetry. Consequently, a regular polygon has as many axes of symmetry as it has sides. See (*A*) and (*B*), Fig. 99. The figure may be folded on any one of these axes and one half will coincide with the other half.

An isosceles triangle and an arc, sector, or segment of a circle has but one axis of symmetry; see (*D*), Fig. 99. The figure whose outline is shown at (*C*) also has but one axis of symmetry. An ellipse has two axes of symmetry, the long and short diameters.

148. A solid has a plane of symmetry when sections equally distant from the plane of symmetry and parallel to it are equal and every point in one section has its symmetrical point in the other section. A frustrum of any cone has at least one plane of symmetry, which includes the axis of the cone and the long diameter of either base. If the frustum is that of a right cone, the bases are perpendicular to the axis, and there are any number of planes of symmetry perpendicular to the bases.

If a solid has two planes of symmetry, they intersect in a line of symmetry, and if it has three planes of symmetry, one of which is at right angles to the other two, the three planes intersect in a point of symmetry, which is the center of the solid. Thus, in Fig. 95, if the plane AB is a plane of symmetry, that part of the rectangular parallelopiped in front of the plane is symmetrical to that part behind it; if the plane EF is also a plane of symmetry, that part of the solid to the right of the plane is symmetrical to that part to the left, and the two planes intersect in the line of symmetry pq. If a third plane AB, perpendicular to the other two is also a plane of symmetry, that part of the solid below the plane is symmetrical to that part above it, and the three planes intersect in the point O, which is the center of the solid.

149. Now observe that when a body has one plane of symmetry, the plane divides the body into two equal parts, and the center of the body lies somewhere in this plane. When the body has two planes of symmetry, the center lies in both planes and, hence, lies somewhere in the line of their intersection; the two planes divide the body into four parts, and if they are perpendicular to each other, they divide the body into four *equal* parts. When the body has three planes of symmetry, the center lies in all three planes, which have only one common point—the point of intersection; the three planes divide the body into eight equal parts, and if the planes are perpendicular to one another, the eight parts are all equal.

To find the center of a line, bisect the line and draw a right line perpendicular to the given line at the point of bisection; this line will be an axis of symmetry, provided the line is symmetrical

(as in the case of a right line or circular arc); otherwise, it has no center, unless it is symmetrical with respect to a point. To be **symmetrical with respect to a point,** every line drawn through the point and limited by the given line or by the perimeter of the given figure must be bisected by the point, which is called a **center of symmetry.** Thus, the line shown in Fig. 100 at (*a*) is symmetrical with respect to the center *O*, because $OA = OA'$,

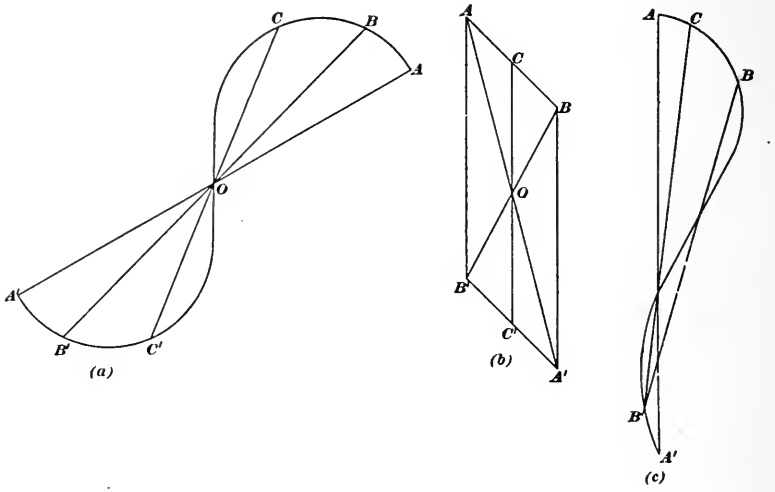

Fig. 100.

$OB = OB'$, $OC = OC'$, etc., and *O* is the center of the line. For the same reason, the parallelogram at (*b*) is symmetrical with respect to the center *O*. The line shown at (*c*) is not symmetrical with respect to a center or to an axis, and therefore has no center. Observe that neither the line at (*a*) nor the parallelogram at (*b*) have an axis of symmetry—neither can be folded on any line so one-half can be superposed on the other; but both have a center of symmetry, which is the center of the figure.

SOLIDS OF REVOLUTION

150. Center of Gravity.—The **center of gravity** of a plane surface or section is that point at which the surface will balance. If the surface have an axis of symmetry, the center of gravity (which may be denoted by the abbreviation c. g.) will lie in that axis; and if it have two axes of symmetry, the c. g. will be their

point of intersection. The practical way of determining the center of gravity of a section is to make a scale drawing of it on stiff paper, say Bristol board or cardboard, then carefully cut out the section; next suspend the model against a vertical surface from a horizontal pin or needle passed through the model; suspend the line of a plumb bob from the same pin, and where the line crosses the model, draw a line. Now suspend the model from some other point and draw a line where the line of the plumb bob crosses; the intersection of the two lines will be the center of

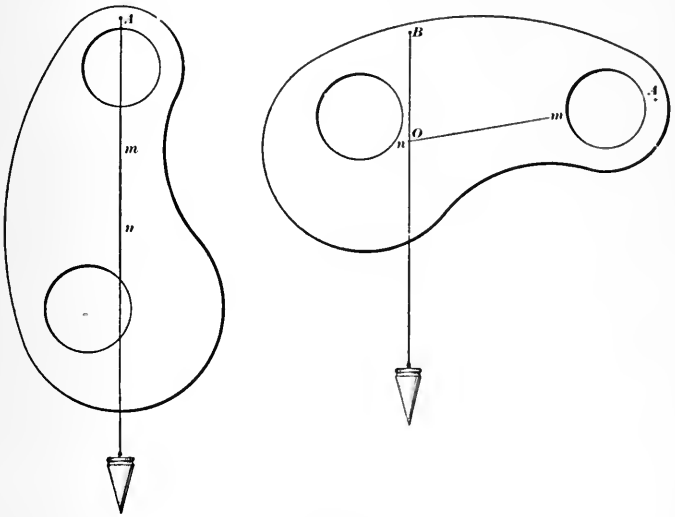

Fig. 101.

gravity of the plane surface or section. This method of determining the c. g. is clearly shown in Fig. 101. The model is first drawn and then cut out, including the holes; a pin hole is made at A, so that the heavy part of the model will hang lowest; where the plumb line crosses, the line mn is drawn. The model is then suspended from another point B and another plumb line drawn, which crosses mn at O, and O is the c. g. of the section.

If the section have one axis of symmetry, it is necessary to draw but one plumb line, since where this crosses the axis of symmetry will be the c. g. It is advisable to have the plumb lines cross at as nearly a right angle as possible, since the point of intersection will then be easier to determine.

If the section (model) be placed on a sharp point directly under

the point O, it will balance; if laid on a knife edge along either of the two plumb lines, it will balance.

151. If any plane section be revolved about a line in that section as an axis, the solid so generated is a *solid of revolution.* Some examples of solids of revolution are the right cylinder, right cone, and the sphere. The hollow cylinder or tube of Art. **127** is also a solid of revolution, and may be generated by revolving a rectangle about an axis parallel to one of the sides of the rectangle; see (*a*), Fig. 102. If a circle be revolved about an axis, the resulting solid will be what is called a **cylindrical ring** or **torus;** see (*b*), Fig. 102. If the revolving section is a flat ring, as indicated by the dotted circle in (*b*), the torus will be *hollow.*

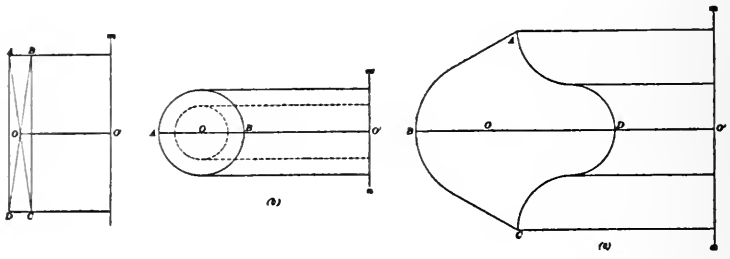

FIG. 102.

Whatever the shape of the revolving section, the volume of the resulting solid will be equal to the area of the revolving (generating) section multiplied by the distance passed through by the center of gravity of the section. If r = the perpendicular distance from the center of gravity to the axis, and the section make a complete revolution, the distance passed through by the center of gravity will be the circumference of a circle having a radius r; representing this circumference by c, $c = 2\pi r$. If a = the area of the generating section, the volume of the solid is

$$V = 2\pi ra$$

152. Referring to (*a*), Fig. 102, the center of gravity O of the section lies midway between AD and BC, because the rectangle has two axes of symmetry, one of which is parallel to and half way between AD and BC; hence, if the diameter of the circle described by O be represented by d_m, and AB and AD be represented by t and l, respectively, the area of the rectangle is $t \times l$, and $V = \pi d_m tl$, which is the same as formula (2), Art. **127.**

Referring to (*b*), Fig. 102, the c. g. of the section is the center of the generating circle. Let r_1 = the radius of this circle; then the area of the generating section is πr_1^2, and the volume of the torus is

$$V = 2\pi^2 r_1^2 r = 19.7392 r_1^2 r \qquad (1)$$

If the torus is hollow, let r_1 = radius of outer circle of section and r_2 = radius of inner circle of section; the area of the section is $\pi(r_1^2 - r_2^2) = \pi(r_1 + r_2)(r_1 - r_2)$, and $V = 2\pi r \times \pi(r_1 + r_2)(r_1 - r_2)$, or

$$V = 19.7392(r_1 + r_2)(r_1 - r_2)r \qquad (2)$$

Many, if not the majority, of solids of revolution that occur in practice have generating sections that have an axis of symmetry perpendicular to the axis of revolution; thus, referring to (*c*), Fig. 102, the section *ABCD* has an axis of symmetry *O'B* perpendicular to the axis *mn* about which the section is revolved. The c.g. must lie somewhere on *O'B*, and may be located by making a model section, on which draw *O'B*, and then suspending the model from a pin as previously described, indicate where the plumb line crosses *O'B*. Or, if preferred, the model may be balanced on a knife edge, and where this edge crosses *O'B* will be the point *O*, the c.g.

Methods of finding by calculation the center of gravity of various geometrical figures will be described in the text treating on mechanics.

EXAMPLE.—What is the volume of a torus, if the diameter over all is 13½ in. and the diameter of a radial section is ⅞ in.? What is its weight if made of cast iron, a cubic inch of which weighs .2604 lb.?

SOLUTION.—Referring to (*b*), Fig. 102, $O'A = 13.5 \div 2 = 6.75$ in.; $AB = ⅞$ in.; $OA = ⅞ \div 2 = 7/16 = .4375$ in. $= r_1$ in formula (1). $O'O = 6.75 - .4375 = 6.3125$ in. $= r$; then,

$$V = 19.7392 \times .4375^2 \times 6.3125 = 23.85- \text{ cu. in.} \quad Ans.$$

The weight $= 23.85 \times .2604 = 6.211-$ lb. *Ans.*

By *radial section* is meant a section made by a plane passing through the center of the body; such a section includes the axis of the body. All the sections shown in Fig. 102 are radial sections.

ELEMENTARY APPLIED MATHEMATICS

(PART 3)

EXAMINATION QUESTIONS

(1) Find (*a*) the convex area and (*b*) the entire area of a cone of revolution whose base is 22 in. in diameter and whose altitude is 38 in.

Ans. { (*a*) 1367.1 sq. in.
(*b*) 1747.2 sq. in.

(2) A hopper having somewhat the shape of a frustum of a pyramid has the following dimensions: upper end, a rectangle 44 in. by 28 in.; lower end, a square 8 in. by 8 in.; altitude 36 in. How many gallons will it take to fill the hopper?

Ans. 82.286 gal.

(3) A piece of cast iron has the shape of a pentagonal prism; the ends are regular pentagons, each edge measuring $2\frac{1}{4}$ in., and the altitude is $4\frac{1}{2}$ in. What is its weight, a cubic inch of cast iron weighing .2604 lb.?

Ans. 10.206 lb.

(4) The base of a triangular pyramid is an equilateral triangle, one edge which measures $5\frac{1}{2}$ in.; the altitude is $9\frac{7}{8}$ in.; what is its volume?

Ans. 43.116 cu. in.

(5) A shallow pan has the shape of a frustum of a cone, and its inside dimensions are: upper end 14 in. diameter, lower end 13 in. diameter, and distance between ends $2\frac{1}{8}$ in.; what are the cubical contents of the pan?

Ans. 304.31 cu. in.

(6) The base of a wrought-iron wedge is $10\frac{1}{2}$ in. by $3\frac{1}{4}$ in.; the upper edge is $7\frac{1}{2}$ in. and the altitude is 15 in. Taking the weight of a cubic inch of wrought iron as .2778 lb., what is the weight of the wedge?

Ans. 64.328 lb.

(7) How many cubic yards are contained in a foundation wall whose length is 24 ft. 3 in., breadth is 15 ft. 8 in., inside measurements, and thickness is 16 in.? The height of the wall is 8 ft. 6 in.

Ans. 365.88 cu. yd.

(8) A wooden ball has a cylindrical hole extending through it, the axis of the hole coinciding with the axis of the ball. If the diameter of the ball is 11 in. and of the hole is $4\frac{1}{2}$ in., what is the weight of the ball, if a cubic inch of the wood weighs .023 lb.?

Ans. 12.268 lb.

(9) A cylindrical tank lies with its axis in a horizontal position; it is filled with stock to within 8 in. of the top; its diameter is 60 in., and its length is 21 ft. 6 in., inside measurements. How many gallons of stock are in the tank? *Ans.* 2907.6 gal.

(10) A cylindrical tank 48 in. in diameter and 16 ft. long is partly filled with stock. The tank lies in such position that the level of the liquid just touches the upper end of the diameter at one end, and cuts the diameter at the other end in its middle point. How many gallons of stock are in the tank?

Ans. 319.17 gal.

(11) It is desired to make a cylindrical tank to hold 800 gal., the height to be $1\frac{1}{2}$ times the diameter; what should be the inside diameter and height to the nearest 16th of an inch?

Ans. { Diameter, $53\frac{5}{16}$ in.
Height, $80\frac{7}{8}$ in.

(12) A wrought-iron shell 9 ft. $7\frac{1}{2}$ in. long is open at both ends; it is 54 in. outside diameter and $\frac{5}{8}$ in. thick. Taking the weight of a cubic inch of wrought iron as .2778 lb., what is the weight of the shell? *Ans.* 3362.7 lb.

(13) If the periphery of an ellipse whose diameters are 37 in. and $12\frac{1}{2}$ in. is 73.22 in., what is the periphery of an ellipse whose diameters are $9\frac{1}{4}$ in. and $3\frac{1}{8}$ in.? *Ans.* 18.305 in.

(14) The area of a certain figure is 430.6 sq. in., and the length of a line drawn through the figure is $21\frac{1}{4}$ in.; what is the area of a similar figure, if the length of a line similarly placed is $19\frac{3}{8}$ in.?

Ans. 357.96 sq. in.

(15) The volume of a frustum of a cone having an altitude of $8\frac{1}{4}$ in. is 6473 cu. in.; what is the volume of a similar cone having an altitude of $6\frac{5}{8}$ in.? *Ans.* 3352 cu. in.

(16) What is the volume generated by revolving an isosceles triangle about an axis parallel to the base, under the following conditions? base is $6\frac{1}{8}$ in., the other two sides are each $4\frac{1}{2}$ in., distance from axis to base is 7 in. The distance from the center of gravity of any triangle to the base is one-third the altitude.

Ans. 513.84 cu. in.

SECTION 3

HOW TO READ DRAWINGS

REPRESENTING SOLIDS ON PLANES

PRELIMINARY EXPLANATIONS

1. The Picture Plane.—When viewing an object, it is essential that the object be illuminated in some manner, either by light originating in or on the object itself or by light coming from another source and being reflected from the object. Light travels in right (straight) lines, called **rays,** and no matter what their length, whether a fraction of an inch or millions of miles, every ray of light is absolutely straight. The number of rays of light from any particular object is infinite, and they extend in every direction (in right lines) from the object unless they are stopped by some opaque substance that light cannot penetrate. A certain number of these rays enter the eye, wherein an *image* or **picture** of the object is formed and the object is then said to be *seen*.

If, when viewing an object, a sheet of paper (transparent so light can pass through it) be held between the eye and the object and the various lines seen on the object are traced on the paper with a pen or pencil, the result will be a drawing or picture of the object viewed from the position occupied by the eye relative to the object. For every change in the position of the eye, there will be a change in the shape of the drawing, and for every change in distance between the paper and the eye, there will be a change in the size of the drawing, these two facts are clearly shown in Fig. 1. Here *ABCDEFG* is a rectangular prismoid—in this case, a frustum of a rectangular pyramid—which contains a hole pasing part way through it; *S* is the eye; and *P* is the plane of the paper, called the **picture plane.** Now imagine lines drawn from the points *A*, *B*, *C*, etc. of the object to the

eye; these lines correspond to the rays of light from the object to the eye, and they pierce the picture plane P in the points a, b, c, etc. Joining these points by lines as shown, the result is the outline *abcdefg*, which is a **drawing** or **picture** of the object *ABCDEFG*. It is evident that if the point S be moved up or down the line $S'S''$ or be moved perpendicular to this line in a plane perpendicular to the plane of the paper, say in a plane parallel to the picture plane, the rays will make a different angle with the picture plane and the shape of the drawing will

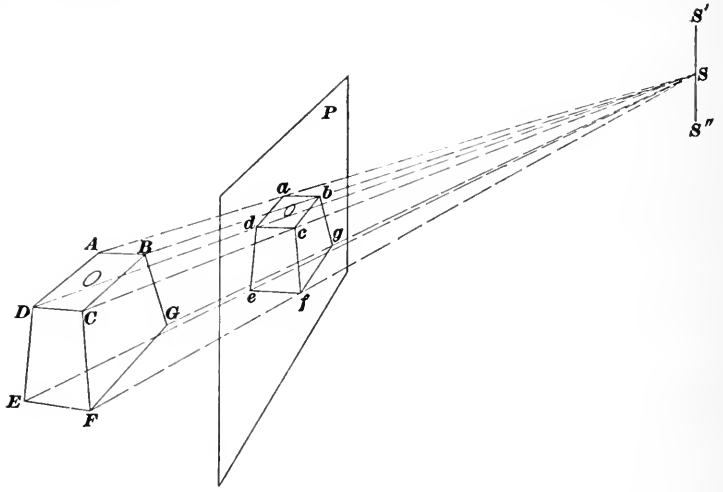

Fig. 1.

be different. It is further evident that as the picture plane is brought nearer to the eye, the drawing will be smaller, and if moved farther from the eye, the drawing will be larger, owing to the convergence of the rays.

2. Note that every ray makes an angle with the picture plane that is different from that made by any other ray; thus, the angle made by the ray AS is different from that made by BS, FS, etc. Now assume the picture plane to be so located that it is perpendicular to the parallel planes of the bases of the frustum and is parallel to the parallel edges CB and FG; assume further that the point S, called the **point of sight,** lies on a ray passing through the center of the face $CBGF$ and perpendicular to the picture plane. Then, if the picture plane be very near the object and the point of sight be a great distance from the object, all the rays will make

angles with the picture plane that are very nearly equal to a right angle; and, if the point of sight be assumed to be situated at an infinite distance from the object, the rays will all be *parallel and will all be perpendicular to the picture plane.* The resulting drawing will then be a **projection** of the object on the picture plane, as shown in Fig. 2. Here only one side of the object is represented on the drawing, the side *CBGF*; the entire line *AB* is projected in the single point *a*, *b*; the lines *DC*, *EF*, and the line representing the edge running back from *G* are also projected in single points, since they are all perpendicular to the picture plane. It will be noted that the hole does not appear at all.

3. While the drawing in Fig. 2 shows only one side of the object and gives scarcely any intimation as to the shape of the object, it nevertheless possesses several advantages over that shown in Fig. 1. On the frustum, the lines *AB* and *CD*, also *AD* and *CB*, are equal and parallel, but in Fig. 1, these lines are neither equal nor parallel, and it would be very difficult to determine from the lengths of the lines *ab*, *bc*, etc. the true lengths of the edges *AB*, *BC*, etc. In Fig. 2, *cb* and *fg* are parallel, as they should be; *cb* = *CB* and *fg* = *FG*. Further, by using dotted lines to indicate lines that are hidden, the depth and diameter of the hole can also be shown.

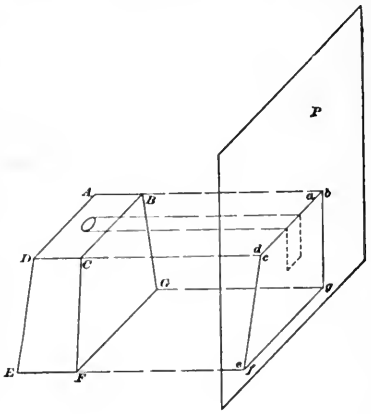

FIG. 2.

4. Projection Drawings.—The drawing shown in Fig. 1 is called a **scenographic projection drawing,** a **perspective drawing,** or, simply, a **perspective**; the drawing shown in Fig. 2 is called an **orthographic projection drawing** or, simply, a **projection drawing.** In the majority of cases that arise in practice, *two* views are given of the object, one view being taken parallel to the horizontal plane and the other parallel to the vertical plane; and when both these views are projection drawings and are fully dimensioned, they will usually suffice for reproducing the object in its exact size. If the object is a complicated machine or machine part, *three* views may be necessary. If, in addition, the object has a

complicated interior arrangement that is hidden by the outside surface of the object, interior views (sections) are frequently necessary or desirable, in order to obviate the use of too many lines, which may make the drawing very hard to read. These features will be made clear in what follows.

Suppose the frustum of Fig. 1 be enclosed in a glass box, as illustrated in Fig. 3, and that the front and right-hand sides and the top be treated as picture planes, the glass being assumed to be transparent. Projecting the object on the front plane M, the result is the outline $d''c''f''e''$, which may be regarded as a drawing of the frustum on the picture plane M when the eye is at an infinite distance from it. The lines Dd'', Cc'', etc., are the light rays from the object to the eye; as applied to drawings, these lines are called **projectors.** In a similar manner, Cc''', Bb''', etc. are projectors from the object to the plane side P, and $c'''b'''g'''f'''$ is the projection of the frustum on the plane P, considered as a picture plane. Likewise, Ee', Dd', etc. are projectors from the object to the top plane N, and the outline there shown is a projection drawing on the plane N, considered as a picture plane. Note that the hole is shown in all three views, being represented as a circle in the top plane, and as a dotted rectangle in the front and side planes.

The line of intersection made on a plane A by the intersection with it of another plane B is called the **trace** of the plane B; Thus, in Fig. 3, the intersection of plane M with plane N is the line JK, and JK is the trace of plane M on plane N; likewise, JK is the trace of plane N on plane M. Similarly, KL is the trace of plane P on plane N, and KI is the trace of plane P on plane M. The lines JK, KL, and KI are so important that they have received special names: JK is called the **front trace;** KL is called the **side trace;** and KI is called the **vertical side trace.**

If a plane be passed through the line EF (the lower front edge of the frustum) parallel to the plane M, the trace of this plane on N will be the line $e'f^{iv}$, and the trace on plane P will be the line $f^{iv}f'''$. (A plane is of infinite extent.) It will be observed that $e'f^{iv}$ is parallel to the projector Ff'''; in fact, it is a projector from f' to the side trace, which it intersects in f^{iv}. Also, $f^{iv}f'''$ is parallel to the projector Ee' and is a projector from f''' to the side trace KL, which it intersects in f^{iv} also. Similarly, e^{v} is the projector of e' and e'' on the front trace JK, and is the

point of intersection of the traces $c''c^v$ and c^vh' of the plane $h'c^vc''H$, which has been passed through EH parallel to plane P. Consequently, if the position of the projection of any point on the planes N and M, N and P, or M and P is known, the position of the projection of the point on the third plane can easily be found. For example, suppose the positions of c' and c'' are known, and it is desired to find the position of this point on plane P. Draw $c'c^{iv}$ perpendicular to KL, which it intersects in c^{iv}; through c^{iv}, draw $c^{iv}c'''$ perpendicular to KL; also

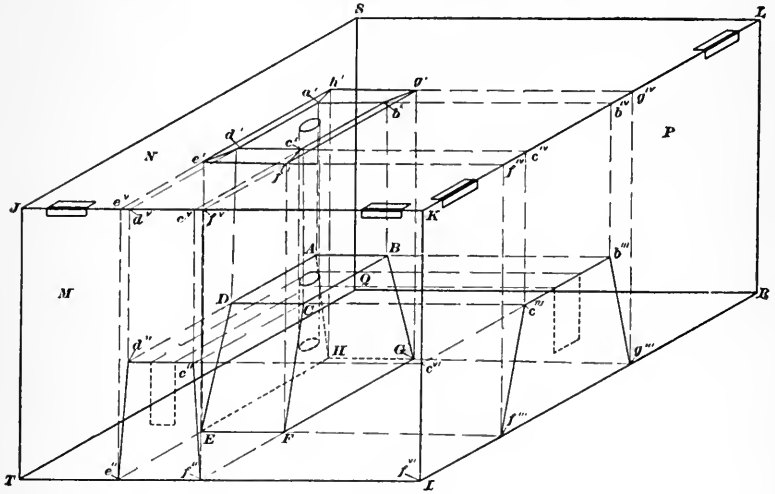

FIG. 3.

$c''c^{vi}$ perpendicular to KI, which it intersects in c^{vi}; draw $c^{vi}c'''$ perpendicular to KI (and parallel to KL); $c^{vi}c'''$ intersects $c^{iv}c'''$ in c''', which is the position of the projection of point C of the object on the side plane P. If the projections c'' and c''' had been given and the projection c' on the plane N had been desired, project c'' on the front trace in c^v; project c''' on the side trace in c^{iv}; draw c^vc' and $c^{iv}c'$ perpendicular respectively to JK and KL, and they intersect in c', which is the required projection.

The outlines $a'b'c'd'e'f'g'h'$, $d''c''f''e''$, and $c''b'''g'''f'''$ are projection drawings of the rectangular frustum; they are not suitable as they stand for use as working drawings or for any other purpose. To make them suitable, imagine the side M of the glass box to be hinged to the top side N, and the side P to be hinged to the top

also. Now lift M until its plane coincides with the plane of N, and lift P until its plane coincides with the plane of N also; the result will be as shown in Fig. 4. Note that the projectors $g'g^{iv}$ and $g^{iv}g'''$, $b'b^{iv}$ and $b^{iv}b'''$, etc. become a single right line in Fig. 4; and the same thing is true of the projectors $e'e^{v}$ and $e^{v}e''$, $d'd^{v}$ and $d^{v}d''$, etc. In other words, g' may be projected directly to g''', b' to b''', etc.; and e' may be projected directly to e', d' to d'', etc., the only requisite being that the distance between $g'''f'''$ and $b'''c'''$ or the distance between $e''f''$ and $d''c''$ must be known, and this will be given by measurements made on the object.

Instead of the arrangement of views shown in Fig. 4, another arrangement equally correct may be and is frequently employed. Referring to Fig. 3, suppose that instead of hinging the side P to the top N, the side P is hinged to the front M; then pulling out the side P until its plane coincides with the plane of M, lift both planes until the common plane of M and P coincides with the plane of N. The result will be the arrangement shown in Fig. 5. The arrangement shown in Fig. 4 is the more natural, but that shown in Fig. 5 may sometimes be more convenient. Either Fig. 4 or Fig. 5 is a correct projection drawing of the frustrum, and when properly dimensioned, may be used as a working drawing.

5. Names of, and Number of, Views.—Referring to Figs. 4 and 5, view N is called either a **top view** or a **plan**; it is the view obtained when the eye is directly over the object. View M is called either a **front view** or a **front elevation** or, simply, the **elevation**; it is the view obtained when the eye is directly in front of the object. View P is called a **side view** or a **side elevation**; it is the view obtained when the eye is so situated as to see the object from the side, the picture plane being at right angles to the front and top planes.

In both Figs. 4 and 5, three views are given, and, theoretically, three views on planes perpendicular to one another are sufficient to give the size and shape of any object, since no solid has more than three dimensions—length, breadth, and thickness. In practice, however, it is sometimes advisable to show more than three views, because the number of lines on the drawing would otherwise be so numerous that the drawing would be very difficult to read. Since the glass box in Fig. 3 has six sides, it is possible to get six views without modifying the shape of the box. Thus

what is termed a **bottom view** or **inverted plan** is obtained by using *TQRI* as a picture plane, another side view by using *TQSJ* as a picture plane, and a **back view** or **rear elevation** by using *RQSL* as a picture plane. To get these views into proper position, imagine the bottom plane to be hinged to plane *M*, the side planes to be hinged to plane *N*, and the back plane to be hinged to plane *N* also. Now revolve the bottom plane *TQRI* downward

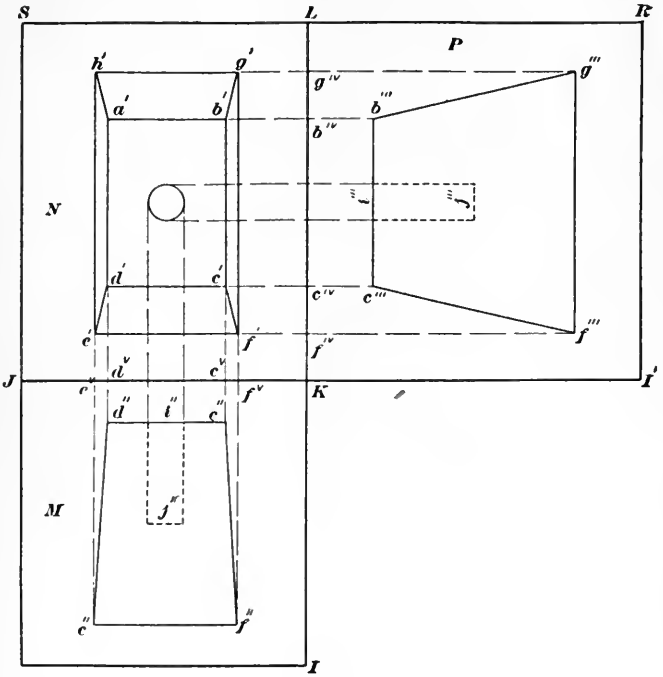

Fig. 4.

until it coincides with plane *M*, and then revolve both planes upward until they coincide with plane *N*, likewise, revolve planes *TQSJ*, *IRLK*, and *RQSL* upward until they also coincide with plane *N*; the result will be as shown in Fig. 6. Except for the letters at the corners, the side views are alike and the front and back views are also alike, since the object is symmetrical; the bottom view, however, is somewhat different from the top view by reason of the dotted lines, which are used because the base of the frustum hides everything above it when the frustum is viewed from below.

When all six views are shown, the arrangement in Fig. 6 is to be preferred. However, the bottom and sides can be imagined to be hinged in any other manner desired that will permit all the planes to be brought into coincidence with the top plane. Consequently, the inverted plan may be placed to the right of the right side elevation $c'''b'''g'''f'''$, to the left of the left side elevation $d^{vii}a^{vii}h^{vii}e^{vii}$, or above the rear elevation $a^{vi}b^{vi}g^{vi}h^{vi}$, and the

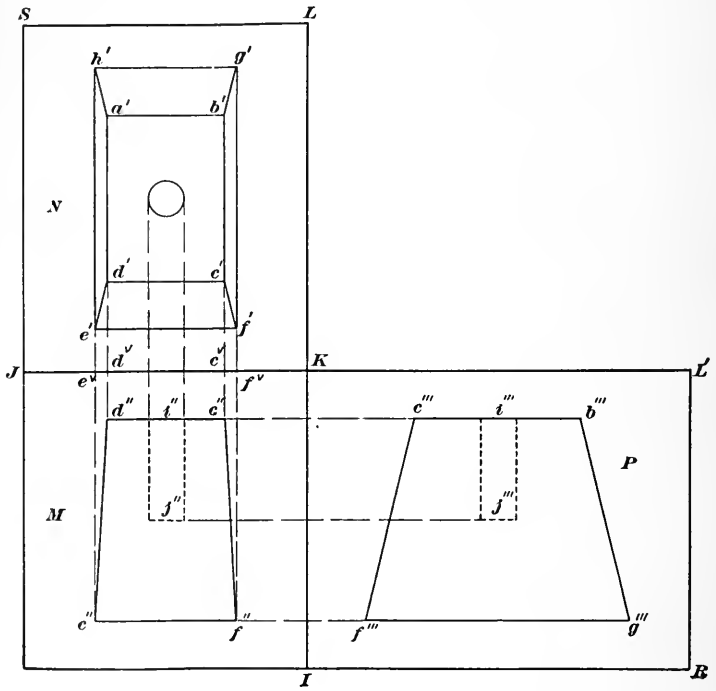

Fig. 5.

two side elevations may be placed to the right and left of the front elevation, as noted in Fig. 5, if desired. It will be noted that the letters at the outside corners on the inverted plan are capital letters, corresponding to those at the corners of the base of the frustum, because as shown in Fig. 3 the frustum is supposed to rest on the bottom plane and there are, consequently, no projectors from the base to the picture plane.

6. Working Drawings.—A working drawing is a projection drawing on which all necessary dimensions are marked and on which all necessary notes are written or printed that are required

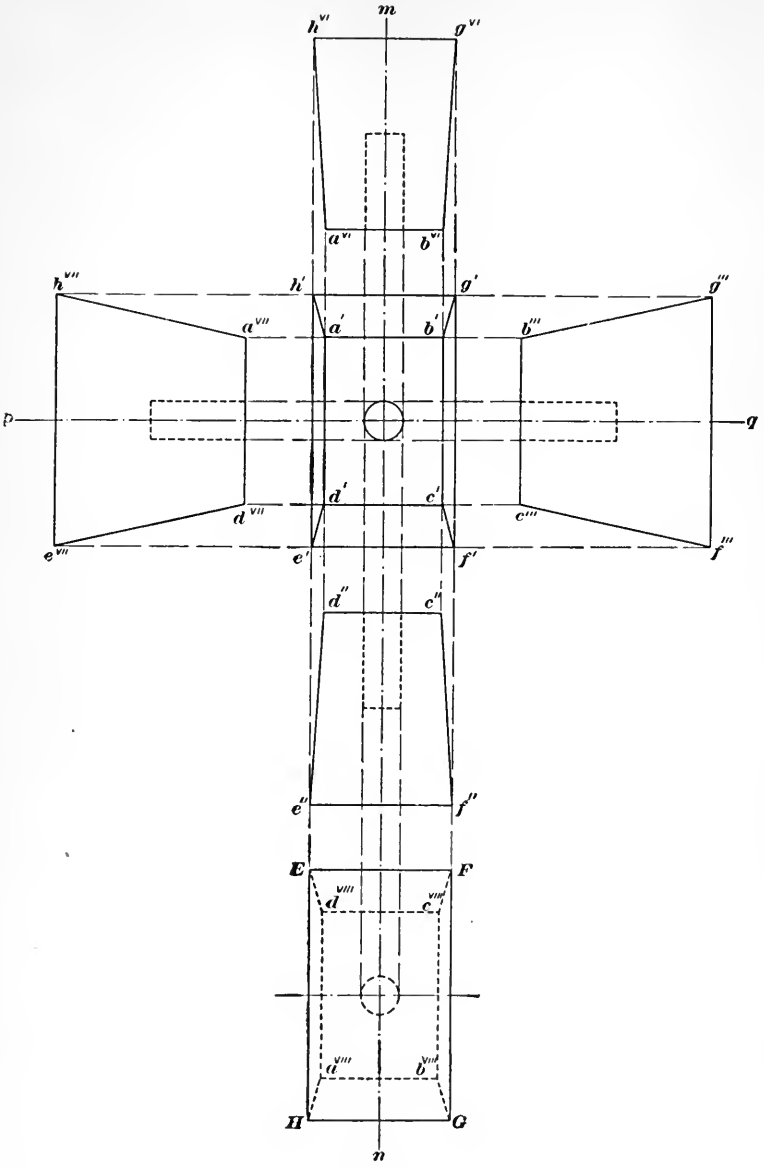
m
h^VI
g^VI
a^VI
b^VI
h^VII
h'
g'
g'''
a^VII
a'
b'
b'''
p
q
d'
c'
d^VII
c'''
e^VII
e'
f'
f'''
d''
c''
e''
f''
E
F
d^VIII
c^VIII
d^VIII
b^VIII
H
G
n

FIG. 6.

in order that the object represented may be made or reproduced. A working drawing of the frustum of Fig. 1 is shown in Fig. 7. It will be observed that only two views are given; two views are all that are required in this case, as the following considerations will show:

The lines *mn* and *pq* are called **center lines;** in the present case, they are axes of symmetry in the plan and *mn* is an axis of symmetry in the front elevation. It is plainly evident that the point of intersection of *mn* and *pq* is the center of the circle that represents the plan of the hole. The plan shows that there are two

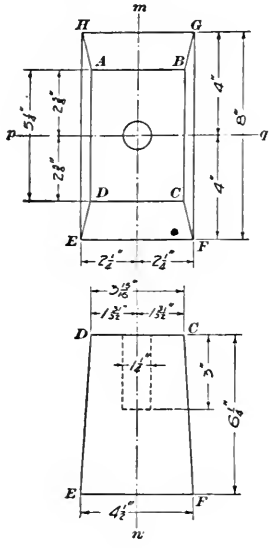

Fig. 7.

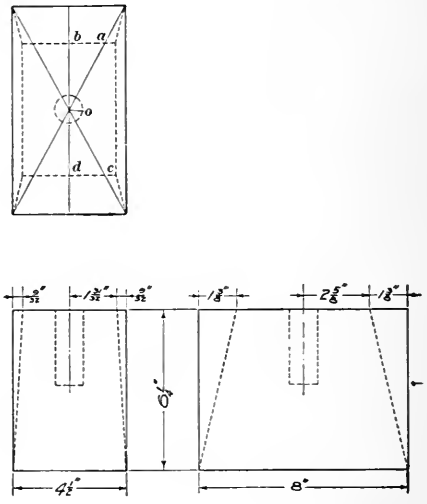

Fig. 8.

surfaces, *ABCD* and *EFGH*, whose projections are rectangles, and the elevation shows that these surfaces are planes (flat surfaces) and that they are parallel. If they were not plane surfaces, the lines *DC* and *EF* in Fig. 7 would not be straight, and if they were not parallel, the lines *DC* and *EF* would not be parallel. It is seen from the dimensions that *EF* and *HG* are both 4 in. from the center line *pq*, and that *EH* and *FG* are both $2\frac{1}{4}$ in. from the center line *mn*; also, *AB* and *DC* are both $2\frac{5}{8}$ in. from *pq*, and *DA* and *CB* are both $1\frac{3}{32}$ in. from *mn*. Since these four dimensions are given only once, it is inferred that *HG*, *AB*, *DC*, and *EF* are parallel to *pq*, and that *EH*, *DA*, *CB*, and *FG* are parallel to

mn, thus making *HGFE* and *ABCD* rectangles, since *the main center lines are always drawn perpendicular to each other.* The two planes are parallel and are located symmetrically with respect to the center lines *mn* and *pq*; their distance apart is given in the elevation, and is found to be $6\frac{1}{4}$ in. The general shape is, consequently, a prismoid, since if the sides were not plane surfaces, some of the lines connecting the top and bottom, as *DE*, *CF*, *BG*, and *AH* (in both plan and elevation) would not be straight. The hole is $1\frac{1}{4}$ in. in diameter and 3 in. deep, and extends down from the top.

To make the object from say, a piece of wood, a rectangular prism having a cross section of $4\frac{1}{2}'' \times 8''$ and a length of $6\frac{1}{4}''$ would be made. On one end, lines would be drawn parallel to the long sides and $2\frac{1}{4} - 1\frac{3}{32} = \frac{9}{32}$ in. from them; also, lines would be drawn parallel to the short sides and $4 - 2\frac{5}{8} = 1\frac{3}{8}$ in. from them, as indicated in the elevation, Fig. 8. Then the material included between the outer edges and the dotted lines would be planed off, the result being the frustum. The center of the hole could then be located by drawing the diagonals, as indicated in the plan, or by laying off *ab* and *cd*, as indicated, both being equal to $1\frac{3}{32}''$, and drawing *bd*; then lay off *bo* or *do* equal to $2\frac{5}{8}''$, thus locating the center *o*. Having found the position of *o*, drill or bore a hole $1\frac{1}{4}''$ in diameter and $3''$ deep, the axis of the hole being perpendicular to the bases, and the work is completed.

It will be noticed that no projectors are shown in Figs. 7 or 8; they are never shown on finished drawings or on working drawings. When reading a drawing, that is, when studying it to find out the shape of the object and the details of its parts, the projectors can always be imagined to be present; and if the eye does not readily perceive the connection between different parts of two views, this may usually be found by means of a straightedge assisted, perhaps, with dividers to set off distances. This feature will be dwelt on more fully later.

SPECIAL FEATURES PERTAINING TO DRAWINGS

7. Different Kinds of Lines Used on Drawings.—In Fig. 9, are shown five different lines, which are used in the following manner:

LINE I.—This is a **full line** and may be of any convenient weight (by weight is here meant *thickness*). This line should have the same weight wherever used on any particular drawing;

it is employed in all cases when the outline of the object can be seen with the eye in the position it is assumed to occupy when the view is drawn. This line is used more than any of the others and is, consequently, the most important.

LINE II.—This line, called the **dotted line,** consists of a succession of dots or very short dashes; it is used to show the outline of parts that cannot be seen by the eye when in its assumed position relative to the view being drawn. The inverted plan, or bottom view, in Fig. 6 is a good example of the use of the dotted line. Viewing the frustum from the bottom all that can be seen is the outline of the base, which is drawn with full lines. The top and the edges connecting the top and bottom are then represented by dotted lines, and likewise the hole. This line is never used for any purpose other than to represent invisible outlines.

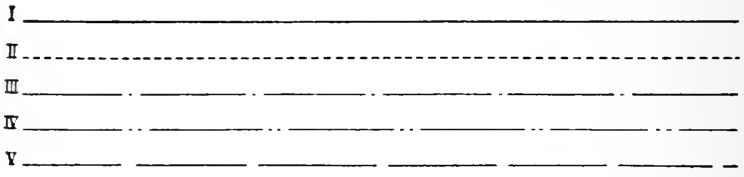

FIG. 9.

LINE III.—The **broken and dotted line** consists of a series of long dashes with a single dot or very short dash between the long dashes; it is used for center lines, and is also frequently employed to denote the traces of planes, showing where a section has been taken. Its use as a center line is shown in Figs. 6 and 7. Its use to indicate where a section is taken will be discussed later.

LINE IV.—This **broken and dotted line** consists of a succession of long dashes and two dots; it is used for the same purpose as line III, and both rarely appear on the same drawing, but when they do, line III is used for center lines and line IV to indicate where a section has been taken.

LINE V.—The **broken line** consists of a series of long dashes; it is generally used for the same purpose as projectors, to indicate the extension or prolongation of lines, but its principal use is for dimension lines. It is also sometimes used to indicate the extension of lines that are not actually a part of the view being drawn. Fig. 7 shows how it is employed in extending lines and in dimension lines.

While the foregoing specifies the manner in which these lines

are most generally used, there are occasional exceptions, particularly in the case of working drawings. In some drafting offices, the regular full line is made very heavy and a light full line is used in the same manner as line III; this practice, however, is not recommended. Again, it is quite common practice to use the light full line for dimension lines, it being broken only where the dimension is placed. But, when lines III, IV, and V are used, they are usually employed as specified above.

8. Center Lines.—Center lines are used for two purposes: for what may be termed *base lines*, from which to take measurements; and to indicate curved surfaces, particularly circles and cylindrical surfaces. They are also used as axes of symmetry. Referring to Fig. 6, the center line *pq* serves two purposes: it is an axis of symmetry for the plan and the two side elevations; it shows, in connection with the circle in the plan, that the hole is round—a right circular cylinder, in fact. The center line *mn* also serves the same two purposes, being an axis of symmetry for the plan, the front and rear elevations, and the inverted plan. The point of intersection of these two center lines locates the center of the circle that represents the top and bottom views of the hole. On working drawings, center lines are invariably drawn to define the axis of cylindrical surfaces, and their presence on a drawing passing through a rectangle is sufficient in itself, as a rule, to show that the rectangle is the projection of a cylinder. In the case of a circle, two center lines are always drawn at right angles to each other, thus locating the center of the circle. The use of center lines as base lines is illustrated in Fig. 7; here the dimensions $2\frac{1}{4}''$, $2\frac{1}{4}''$, $2\frac{5}{8}''$, $2\frac{5}{8}''$ etc. which are measured from the center lines outward, serve to locate the position of the hole, and they also show by their equality that the center lines are axes of symmetry.

9. Dimension Lines.—Whenever it is possible to avoid it, dimension lines are seldom drawn across the face of any view; this is to prevent confusion in reading the drawing, and also to make the dimensions more prominent. By the use of extension lines, the dimension lines and dimensions are very largely kept off the different views. Practically the only exception to this rule is when giving the diameters of circles and the radii of circular arcs. The use of extension lines is shown in Figs. 6 and 7. In Fig. 7 it will be noted that the diameter of the hole is printed on the front elevation, thus indicating the diameter of the cylin-

drical hole instead of the diameter of the circle in the plan; this is done because of the crossing of the center lines on the circle.

When there is room enough, the dimension lines have arrowheads, one at each end, with the dimension written or printed about midway between the ends; but, when the space is limited, as in the case of the diameter of the hole in Fig. 7, short arrows with their heads pointing toward each other are used, the dimension being placed between the arrowheads. In some cases, even this will not suffice, the dimension being placed alongside the arrow, as illustrated in Fig. 8 in connection with the dimension $\frac{9}{32}''$.

What are termed the *general* or **over all** dimensions are those relating to the extreme or outer bounding lines of the figure. In Fig. 7, the over all dimensions are 8″, $4\frac{1}{2}''$, and $6\frac{1}{4}''$, the first two giving the size of the base and the third the height of the frustum. The general dimensions include these and also $5\frac{1}{4}''$ and $3\frac{15}{16}''$, which give the size of the top.

It might be argued that both of the two dimensions, which added together make the over all dimension 8″ are not necessary, since if one is given the other can be found by subtracting from 8; this is true, but the idea of giving both is to save subtracting, which is sometimes awkward. For instance, the distance AB, Fig. 7, is $3\frac{15}{16}''$; if the distance from A to the center line were given as $1\frac{31}{32}''$, it is not readily apparent that the distance from B to the center line is $1\frac{31}{32}''$, and this can be found only by subtracting $1\frac{31}{32}''$ from $3\frac{15}{16}''$, a somewhat awkward operation and one that takes a certain amount of time, together with the possibility of making a mistake. It is for the same reason that the over all dimensions are given—to obviate the necessity of adding the intermediate dimensions. Over all dimensions are placed outside of, that is, beyond, all shorter measurements.

10. Scales.—Up to this point, drawings have been described as though every line on them was of the same length as the corresponding measurements taken on the object. It is obvious that this is not feasible in many cases, for not only would it be extremely difficult to make the drawing but it would also be very difficult if not impossible to read it. The matter of storing and preserving drawings must also be considered. Consequently, most of the drawings in actual use are made to **scale**, as it is termed; by this is meant that the drawing is smaller than if all the dimensions corresponded in length with those of the object. In such cases,

lines on the drawing are only one-half, one-third, one-fourth, etc. as long as those they represent on the object. Sometimes, when the object is small and it is desired to bring out certain details prominently, the drawing may be made two, three, four, etc., times as large as the object.

Any drawing that has been made accurately, every line being carefully measured with a scale, is called a **scale drawing.** If every line on the drawing is of the same length as the line it represents on the object, the scale is *full size* or 12″ = 1 ft. If a line on the drawing is only half as long as the corresponding line on the object, the scale is *half size* or 6″ = 1 ft. if the lines on the drawing are only a quarter, an eighth, etc. as long as the corresponding lines on the object, the scale is *quarter size, eighth size* etc. A quarter-size scale is 3″ = 1 ft. because one-fourth of 12″ is 3″; hence, 3″ measured on the drawing equal 1 ft. measured on the object. If 3″ be divided into 12 equal parts, each part will represent 1 inch on the object when the drawing is made to a scale of 3″ = 1 ft. Dividing each of these parts into halves, quarters, eighths, etc., these smaller divisions represent halves, quarters, eighths, etc. of an inch.

The scales most commonly used are: full size (12″ = 1 ft.), half size (6″ = 1 ft.), 3″ = 1 ft. (quarter size), $1\frac{1}{2}$″ = 1 ft. (eighth size), and $\frac{3}{4}$″ = 1 ft. (sixteenth size). The first three scales are the most used, and a scale smaller than $\frac{3}{4}$″ = 1 ft. is very seldom needed in drawings of machines. Architects and civil engineers use scales very much smaller, a favorite scale with architects being 1″ = 4 ft. (or $\frac{1}{4}$″ = 1 ft.).

Any drawing that has been made to scale should always have the scale used marked on it. It sometimes happens that a part of the drawing may be made to one scale and a part to another scale; in every such case, the scale used should always appear on the drawing in connection with the part to which it applies.

To use a scale to find the actual length of a particular line on the object, proceed as follows: suppose the scale is 3″ = 1 ft., and that an ordinary 12-inch scale, with inches divided into halves, quarters, eighths, sixteenths, and thirty-seconds, is used. Suppose further that the actual length of the line on the drawing that is being measured is $3\frac{1}{32}$ in. Since the scale is 3″ = 1 ft., 1 in. on the drawing represents 12 ÷ 3 = 4 in. on the object; $\frac{1}{4}$ in. on the drawing represents 1 in. on the object; and $\frac{1}{32}$ in. on the drawing represents $\frac{1}{32} \times 4 = \frac{1}{8}$ in. on the object. Con-

sequently, $3\frac{1}{3}\frac{3}{2}$ in. on the drawing represent $3 \times 4 + 13 \times \frac{1}{8} = 12 + 1\frac{5}{8} = 13\frac{5}{8}$ in. on the object. Had the scale been $1\frac{1}{2}'' = 1$ ft., 1 in. on the drawing $= 12 \div 1\frac{1}{2} = 8$ in. on the object; $\frac{1}{3}\frac{1}{2}$ in. on the drawing $= \frac{1}{3}\frac{1}{2} \times 8 = \frac{1}{4}$ in. on the object; and $3\frac{1}{3}\frac{3}{2}$ in. on the drawing represent $3 \times 8 + 13 \times \frac{1}{4} = 24 + 3\frac{1}{4} = 27\frac{1}{4}$ in. on the object. Observe that since the second scale is twice as small as the first, the length of the line when measured to the second scale should be twice as long as when measured to the first scale; and this is the case, since $13\frac{5}{8} \times 2 = 27\frac{1}{4}$.

The process of determining the length of a line on the object by measuring the corresponding line on the drawing is called **scaling the drawing,** and when a measurement has thus been taken, the drawing is said to be **scaled.** Any drawing may be scaled provided the scale to which the drawing was made is known, provided further that the drawing has been made accurately and the scale used for measuring is accurate. Special rules (scales) are made for making drawings to scale and measuring them.

11. Abbreviations and Notes on Drawings.—When a line is drawn from the center to the arc to indicate a radius, the abbreviation *r.* or *rad.* is almost invariably written after the dimension, thus making it clear that the dimension is the radius of the arc. An arrowhead is placed at the end of the dimension line touching the arc, but not at the center. The abbreviation *D.*, *Dia.*, *Diam.*, *d.*, *dia.*, or *diam.* is used to follow the dimension indicating the diameter of a circle or a cylindrical surface. *Thds* or *thds* means *threads;* thus, 8 *thds* means 8 threads to the inch, and refers to screw threads. The letter *f.* or *fin.* means *finish,* and indicates that the surface on which it is written in the drawing is to be finished. If only a part of the surface is to be finished, this is frequently indicated by drawing a line near to and parallel to the line representing the surface, but extending only as far as the surface is to be finished, and writing on it *f.* or *fin.*

In addition to the dimensions, working drawings usually carry a number of "notes," which are written or printed on the drawings for the benefit of the workmen. In connection with these notes, certain terms are employed that deserve explanation. Thus, the word *cored* means that the hole is to be made by means of a core when casting and is not to be finished; *bore* or *bored* means that the hole is to be cored and finished by boring; *drill* means that the hole is to be made by drilling; *ream* or *reamed* means that after the hole has been bored or drilled is to be finished by reaming; the

word *tap* means that the hole is to be threaded, a tap being used for this purpose; *faced* means that the surface is to be finished in a lathe or boring mill, or other machine tool that will make the surface flat—usually by revolving it against the cutting tool; *planed* means that the surface is to be finished by planing, the tool used being a planer, shaper, or a milling machine; *grind* means that the surface is to be finished by grinding; *scraped* means that the surface is to be finished by scraping, that is, hand finished with a scraper; *tool finish* means that after the surface has been finished on the machine, nothing further is to be done to it. Other terms are sometimes used, but they are usually self evident and need not be referred to here.

SECTIONS AND SECTIONAL VIEWS

12. Why Sections are Used.—While all hidden surfaces and parts may be represented on a drawing by dotted lines, it is nevertheless frequently advisable to show what are called **sectional views** or **sections** instead of making the drawing in the regular manner. The cutting plane may be considered to pass through every part of the object that it can touch or its trace may be limited to only a short length relating merely to a single detail. Sections are usually so taken that lines which would appear dotted in a regular projection drawing appear as full lines in the sectional view, thus making the drawing easier to read. This fact is brought out in Fig. 10, which is a drawing of a clamping ring. The center lines *mn* and *pq* are axes of symmetry. The view in the middle may here be considered as a front elevation, the view on the right being a side elevation and that on the left a sectional elevation. Note how much clearer the sectional elevation is than the side elevation.

Considering the sectional view, the section is taken along the center line *mn*, the cutting plane being perpendicular to the flat surface included between the circles *e* and *g*, that is, perpendicular to the plane of the paper; that part of the ring to the left of *mn* is then imagined to be removed, and a drawing is made of the remaining part, the eye being situated to the left of *mn*. Now note particularly that whenever a section is taken, any surface touched by the cutting plane is indicated on the drawing by **cross hatching,** as it is termed, the cross hatching consisting of parallel lines, drawn at an angle, usually 45°, to the horizontal. By using

different kinds of cross hatching, different materials may be indicated, so that an inspection of the **section lines** (cross hatching) will show at once what material is to be used in making the object represented by the drawing. Thus, in Fig. 10, the cross hatching there used represents steel, as will be explained presently; hence, the clamping ring is to be made of steel. Supposing the right-hand view to be omitted, the drawing may then be read as follows:

All dimension lines extending up and down and parallel to the center line *mn* are evidently diameters of circles. The dimension $9\frac{3}{3}\frac{1}{2}''$ is the diameter of the circle marked *a*; diameter of circle *b* is $9\frac{2}{3}\frac{3}{2}''$, of circle *c*, $9\frac{1}{3}\frac{3}{2}''$; of circle *d*, $9\frac{1}{4}''$; of circle *e*, 8″, and of circle *f*, $6\frac{3}{8}''$. Circles *b* and *c* are dotted, because, imagining the sectional view to be a full view, when the ring is looked at from a point to the right of the sectional view, all that part of it to the left of *CC'* is hidden. Further, circles *b* and *c* are imaginary, because the surface they are supposed to indicate is a curved surface; still, they are useful in helping to understand the drawing. The fact that the lines *CD* and *C'D'* slope shows that the ring is a frustum of a cone, or that part of it is which is included between *DD'* and *CC'*. That part included between circles *e* and *g* is flat, and extends downward to form a cylindrical ring, whose inside diameter is $5\frac{1}{2}''$, outside diameter is 8″, and altitude is $\frac{5}{1\,6} + \frac{1}{1}\frac{3}{6} = 1\frac{1}{8}''$. Evidently, there is a groove between circles *e* and *d*; there is also another groove on the under side, as indicated at *E* and *E'*, which are at the bottom of another conical surface. According to the note, there are 8 holes spaced equally, the dotted circle showing that they are all situated at the same distance from the center *o*; and the sectional view shows that they pass clear through the ring. The note states that these holes are of such size that they may be threaded by tapping with a $\frac{9}{1\,6}$th inch tap having 12 threads per inch. The note at the bottom of the drawing, which reads "*f*" *all over*, means that the ring is to be finished all over, that is, no part of it is to be left rough.

13. Standard Sections.—The sections shown in Fig. 11 are practically in universal use. The first form, shown at (*a*), consists of parallel lines spaced at equal distances apart, all lines being of the same weight; this form is always used for cast iron. The sectioning for wrought iron is shown at (*b*); it is made by drawing light and heavy lines alternately, parallel and equally dis-

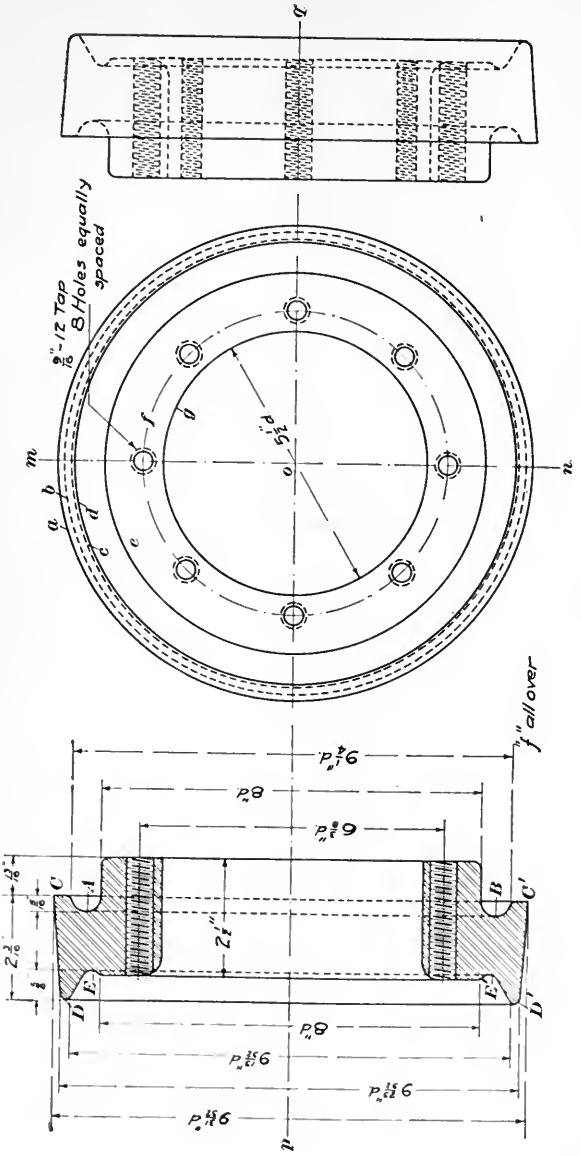

Fig. 10.

tant apart. The sectioning for steel is shown at (*c*); it is made by drawing pairs of parallel lines, the distance between two consecutive pairs being about twice the distance between the lines forming the pairs. The sectioning for brass is shown at (*d*); it is drawn in the same manner as the sectioning for cast iron, except that every other line is broken, being made up of short dashes. The sectioning for wood is shown at (*e*); the upper half shows the

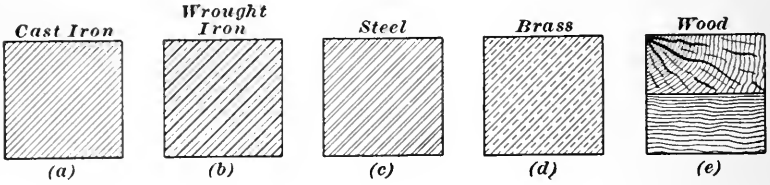

FIG. 11.

form used when the section is taken across the grain, and the lower half is used when the section is taken lengthwise, or with the grain.

There are other forms for other materials, but they are not much used and there are no other recognized standards, different forms being used to indicate the same material in different drafting rooms. The ones shown in Fig. 11 are well recognized and are in nearly universal use.

14. When the surfaces of two different parts come together in a sectional view, the section lines of the two parts are made to slope in different directions whenever possible. Thus, referring to Fig. 12, which represents a section taken through a bracket, which holds up a line shaft, and its bearing P is the bracket, S is the shaft, C is a collar that is forged to and is a part of the shaft, B is a bushing (which can be removed and replaced in case of wear), and R is a collar having the form of a ring, which is held in place by a set screw s and keeps the shaft from moving lengthwise. As shown by the sectioning, P is made of cast iron, B of brass, C and S of steel, and R of wrought iron. Note that the section lines for P and B and for R and P slope in different directions; it was not possible in this case to have the section lines for R and B slope in different directions, but since they indicate different materials, it does not matter particularly. It will also be noticed that the lines at the top and bottom of P are ragged, as though P had been broken off at these places; this

is exactly what the draftsman intended, since only the details of the bearing are to be brought out. For the same reason, the shaft is represented as though broken off also; whenever a

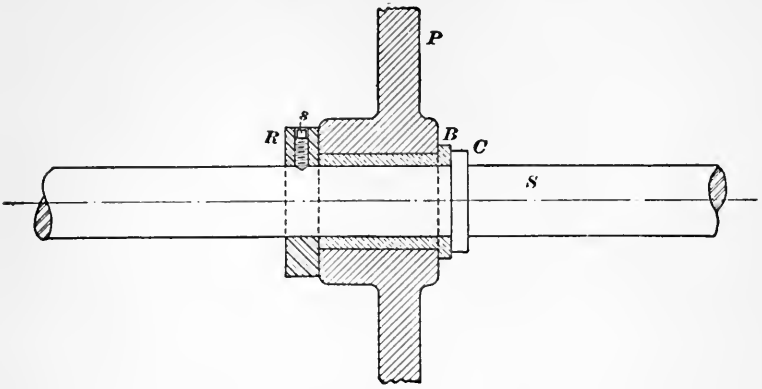

Fig. 12.

round piece is to be shown as broken off, it is always drawn as here indicated. Strictly speaking, the shaft should also have been sectioned; but, by drawing it as here shown and sectioning the ends only, the drawing is more readable and is easier to make.

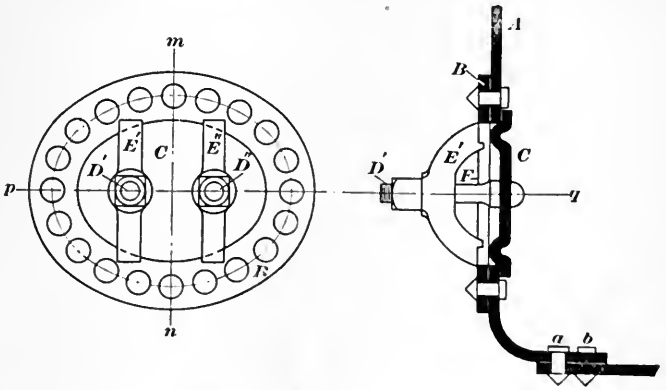

Fig. 13.

15. Thin Sections.—When the material to be sectioned is very thin, as in the case of sheet metal, boiler plates, etc., or when the scale used is so small that the edges of two surfaces in a sectional view are very close together, it is then the custom of many draftsmen to make the surface to be sectioned entirely black; this is well

illustrated in Fig. 13, which shows the details of a manhole near one end of a boiler. Here A is the boiler shell, shown in section by the solid black surface, and which has an elliptically shaped hole through it, as indicated in the other view and by the lines F; B is a steel ring whose inside dimensions are the same as those of the hole in the shell, the ring being riveted to the shell in order to

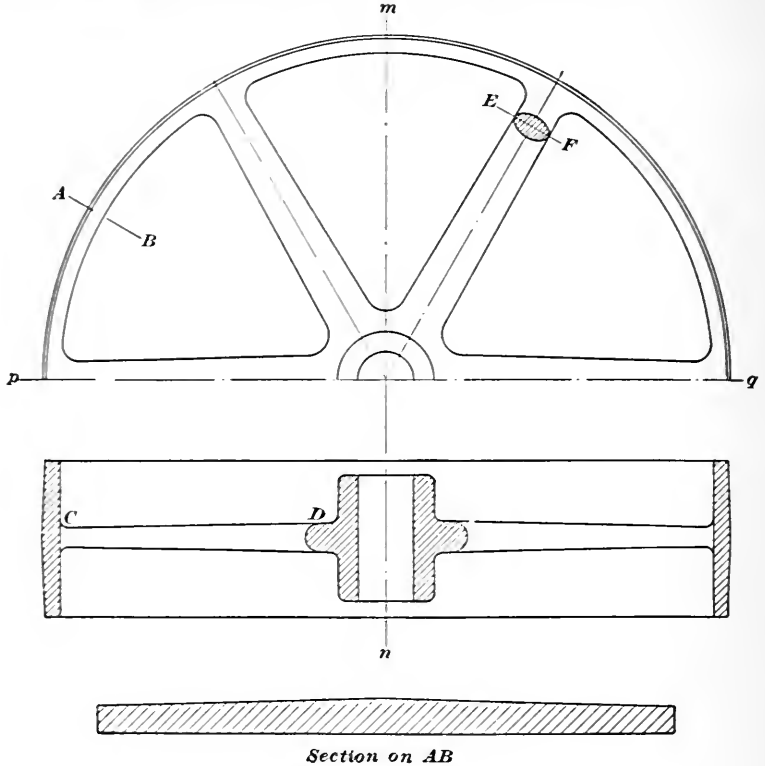

Fig. 14.

strengthen it; C is the manhole cover, also shown in solid black sectioning, which is drawn up against the inside of the boiler and held in place by the two studs D' and D'' and the yokes E' and E'', as clearly shown in the two views. Note that when two black sectioned surfaces come together, they are separated by a thin white line.

16. Conventional Sections.—A **conventional section** is one that is not drawn in strict accordance with the principles of projection; the shaft in Fig. 12 and the rivets in Fig. 13 are exam-

ples of conventional sections. Note that only the end of rivet *b* is shown; this shows that rivet *b* is behind the cutting plane, which cuts rivet *a*.

Another example of a conventional section is shown in Fig. 14. At first glance, it would appear as though the section were taken on the center line *pq*, but an examination of the top view shows that if it were not for the part *CD* of the arms, the section would appear to be taken on the center line *mn*. As a matter of fact, the sectional view has been drawn as though the part that is cross hatched were a section on *mn*, and the arms are then drawn in between the cross-hatched parts. While this violates the rules of projection, the resulting drawing is clear, and this method of drawing sectional views in cases similar to this is almost universal. To show the shape of a cross section of the arm, it is drawn on the arm itself, the section being taken on the line *EF*, which may be located at any convenient point between the hub and the rim, but must be perpendicular to the center line of the arm. Note that the cross section of the arm has the shape of an ellipse and that the arm tapers, the larger end being at the hub. As the drawing has been made to a very small scale, the shape of a section of the rim of the pulley is not clearly shown in the sectional view; hence, a section is taken at some other place, as *AB*, and drawn to a larger scale. This section must be a *radial section*, that is, the trace of the cutting plane must coincide with a radius, and an examination of the section shows that the rim is thicker in the middle than at the ends, the difference between the two being called the *crown* of the pulley. Only one half of the pulley is shown in the top view, the lower half not being necessary because, the pulley being symmetrical, the lower half is exactly the same as the upper half.

READING DRAWINGS

VISUALIZING THE OBJECT

17. A drawing serves several different purposes: it serves to preserve in permanent form the shape of some object, and to make a permanent record of a view or scene; it is useful, perhaps even necessary, in explaining or in understanding the details of a complicated machine, the relations of the various parts and their

operation. If properly dimensioned, the drawing may be used to show the sizes of the different parts for purposes of comparison or for the building of the part or of the complete machine. In connection with the first purpose mentioned it may be remarked that drawings have been found in France on the walls and ceilings of caves, which were made from 50,000 to 100,000 years ago. These drawings are very crude, but are nevertheless intelligible and useful, representing as they do animals that were extinct before the beginning of history.

For a drawing to be useful, it must be so made that the object or scene depicted or drawn can be **visualized**; that is, after looking at the drawing, the mind must be able to picture or imagine, the object represented in the same manner as though the object itself were being viewed by the eye. In the case of a perspective drawing, there is no difficulty in visualizing, because the drawing represents the object or scene as it appears to the eye when the eye is in some chosen position relative to the object, the position chosen being selected by the draftsman. Projection drawings are frequently difficult to visualize, but they can always be pictured in the mind's eye if the reader has a knowledge of the principles heretofore explained and exercises sufficient patience. While progress may be slow at first, continued practice will make one proficient in reading a drawing. It takes a great deal of practice to associate the letters of a word so that the word is recognized as soon as the eye sees it; it is the same way with a drawing, and speed in reading a drawing comes only with practice. There is no reason for discouragement if, at first, the reader finds it difficult to visualize an object represented by a drawing; reading drawings is an art that can easily be acquired by application and with practice.

18. When reading a drawing, several facts and principles should be continually kept in mind; after a little practice, they will require no mental effort to remember them. One of the most important of these principles is that any plane (flat) figure, no matter what its shape, is projected on any cutting plane that intersects the surface at right angles as a right line; in other words, a plane figure is projected into the trace of its plane as a right line. For example, in Fig. 2, the plane of the top of the frustum cuts the picture plane in the line *cb*, which is the trace of the plane *AC* on the picture plane *P*. The figure *ABCD* is projected into the trace of its plane on plane *P* as the right

line *cb*, and the circle within the figure *ABCD* is also projected into the right line *cb*. Again, a plane figure, no matter what its shape, is projected as a similar and equal outline on any plane parallel to the plane of the figure. For example, in Fig. 3, the plane *N* is parallel to the plane of the top of the frustum, and the projection of the top on plane *N* is *a'b'c'd'*, which is equal in all respects to *ABCD*; the projection of the circle is also equal to the circle (hole) on the top of the frustum.

A cylindrical surface is projected on a plane parallel to one of its elements as a quadrilateral, and the projection on a plane perpendicular to an element has the shape of a right section of the cylindrical surface. If the cylinder is a right cylinder, the projection on a plane parallel to an element is a rectangle, and if a right section is a circle or an ellipse, the projection on a plane perpendicular to an element is a circle or an ellipse also.

Always remember that *every point on the object or within the object is projected into some point on every complete view of the object, and a point on any view may be the projection of one or of any number of points on the object.* Thus in Fig. 3, the point *c'''* is not only the projection of the point *C* but also of *D* and of any point on the right line joining *C* and *D*; in fact *c'''* is the projection of the entire line *CD*, because *CD* is perpendicular to the plane of projection *KR*. If the line joining *C* and *D* were not straight, but were a plane curve, its projection on plane *P* would be a right line, and if it were shaped like a screw thread, its projection on plane *P* would be a circle.

It is therefore evident that it is not, in general, possible to determine from one view what any point or line represents; but two views—one preferably at right angles to the other—will usually be sufficient, and three views—one being perpendicular to the other two—will always be sufficient to determine the shape of any object. If there is any doubt as to what any particular point on a view represents, draw (or imagine as drawn) a projector from the point to the other view; if the projector coincide with a line in the other view, the point is the projection of that line, and the point is also the projection of the points of intersection of the projector with any line that it cuts in the other view.

19. Bearing the foregoing in mind, refer to Fig. 4. Looking first at the plan (top view), it is seen that it consists of two rectangles arranged symmetrically, one within the other, whose corners are connected by the right lines *a'h'*, *b'g'*, etc. There is

nothing, however, in this view that shows whether the surfaces outlined by these rectangles are flat or otherwise, whether $a'b'c'd'$ is parallel to $h'g'f'e'$ or not, or whether $a'b'c'd'$ is above or below $h'g'f'e'$; there is also nothing to show whether the circle represents a hole extending from $a'b'c'd'$ downward or whether it represents a cylinder extending upward. All these questions are answered by referring to the other two views. Considering the front elevation, plane M, point c'' is the projection of c' or b', point d'' is the projection of d' or a', and line $d''c''$ is the projection of $d'c'$ or $a'b'$. Since $d''c''$ is the only line between d'' and e'' extending across the figure, it is the projection of *both* $d'c'$ and $a'b'$, c'' is the projection of the entire line $c'b'$, and d'' is the projection of the entire line $d'a'$. Since both these lines are straight, it follows that $a'b'c'd'$ is a flat surface *perpendicular* to the plane M. For similar reasons, $h'g'f'e'$ is also a flat surface perpendicular to the plane M. The two surfaces are therefore parallel, and their distance apart is the perpendicular distance between the lines $d''c''$ and $e''f''$. The dotted rectangle shows that the circle in the plan represents a round hole, whose depth is the length of $i''j''$, plane M, or $i'''j'''$, plane P. The only feature still undetermined is the character of the lines joining the corners, that is, the lines $a'h'$, $b'g'$, etc. Since these lines are straight in all three views, they are straight on the object also, and the sides of the object are likewise flat. Consequently, the object is either a frustum of a pyramid or a rectangular prismoid, and it has a hole in the center extending from the smaller base to within about one-half the distance between the bases. The actual position of the hole cannot be determined by observation only, unless the views are fully dimensioned. Without dimensions, the position of the hole can be determined only by the use of spacing dividers or a scale.

20. It is a great help, sometimes, to imagine the paper to be folded on the front and side traces JK and KL, Fig. 4, or on the front and vertical side traces JK and KI, Fig. 5, so that planes M and P will both be perpendicular to plane N, as in the glass box. Then a projector from c'' will intersect a projector from c''' passing through c', thus locating C on the object; in this way, points on the object may be located from the three views.

Suppose that the object were not a frustum of a pyramid, but that the top view were the same as before, the top being flat

and sloping so that all the edges have different lengths. A perspective of such an object is shown in Fig. 15 at (*a*). A projection drawing giving three views is shown in the same figure. Note that the projectors have been omitted, as is the case in all practical drawings. To read this drawing, note first the point a'', the highest point in the elevation; this corresponds to a' in the plan, because if it corresponded to d', a' would be hidden in the front view, and a'' d'' would be a dotted line instead of a

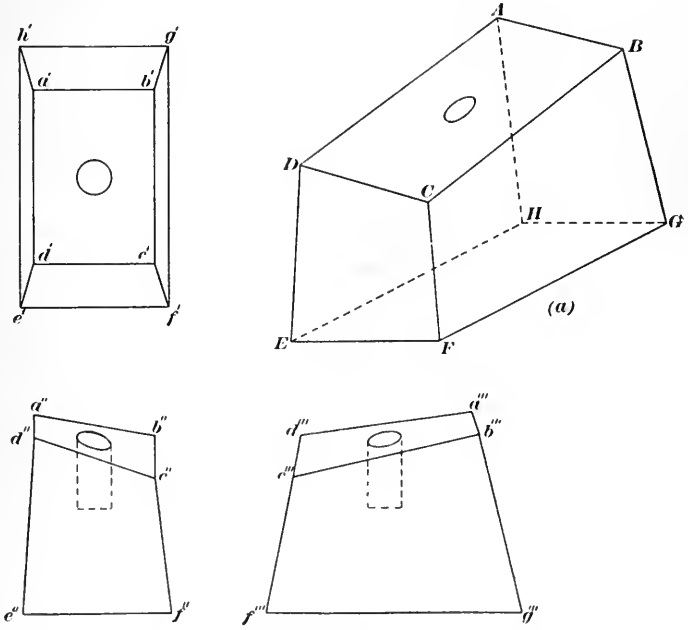

Fig. 15.

full line. For the same reason, b'' corresponds to b', and $a''b''$ is the projection corresponding to $a'b'$; similarly, $d''c''$ is the projection corresponding to $d'c'$, $d''a''$ corresponds to $d'a'$, and $c''b''$ corresponds to $c'b'$. The quadrilateral $a''b''c''d''$ is the projection of the top of the object on the front plane. By reasoning in a similar manner, it will be apparent that the quadrilateral $a'''b'''c'''d'''$ is the projection of the top of the object on the right side plane. Further, since the bounding lines of these projections in all three views are right lines, the surface

is flat. The fact that the surface $h'g'f'e'$ is projected in the right lines $e''f''$ and $f'''g'''$ in the front and side views indicates that this surface is also flat, and since both these lines are horizontal, the surface represented by $h'g'f'e'$ is a plane surface perpendicular to both side planes and, consequently, parallel to the bottom plane. The object, therefore, has the shape of a prismoid that has been cut off at the smaller end by a plane making an angle with all three planes of projection. By measurement or with the spacing dividers, it will be found the distance of b'' from $e''f''$ and of d'' from $e''f''$ are equal; hence, the points D and B on the object, see (a) of the figure, are at the same height above the plane of the bottom of the object.

SOME EXAMPLES IN READING DRAWINGS

21. Guard for Movable Jaw of Vise.—Fig. 16 shows a guard for the movable jaw of a vise. The jaw is made of cast iron, while the guard is made of steel and forms a bearing surface for the head of the screw that moves the jaw. Three views are given: a front view, a bottom view (an inverted plan), and a sectional side view. The center *mn* divides the guard into two equal parts and is an axis of symmetry. For convenience, the same letters of reference have been used on both halves about the center line *mn*. In what follows the front view will be designated as (A), the bottom view as (B), and the sectional side view as (C).

The center line *mn* is supposed to be perpendicular to the bottom plane, and is therefore parallel to the front and side picture planes. The line $f'f'$ in (B) is the projection of *fa*, the semicircle *aaa*, and *af*; it is also the projection of *fc*, *rr*, and *cf*; hence, the front of the guard, as represented by *fcrrcfaa a* is flat and perpendicular to the bottom picture plane, as also indicated by the line $r'''f'''$ in (C). The semicircle *bbb* is projected in the right line $b'b'$ in (B) and is connected to the semicircle *aaa* by a circular arc having a radius of $1\frac{7}{8}$ in. This arc is also shown in (C), and has the same radius. Consequently, the surface represented by *ab*, $a^v b^v$, and $a'b'$ is a curved surface, and since its portions on three planes perpendicular to one another are circular arcs, it is a surface of revolution; it is not a part of a spherical surface, because the radius of a section perpendicular to the axis

is not the same as for a section that includes the axis, the radius of the former being $1\frac{1}{4}$ in. and of the latter $1\frac{7}{8}$ in. To make this clear, the head of the screw, which bears against this surface, is shown in detail at (*a*). The thickness of the guard at the point *b* is indicated by the length of $s'b'$ and $s^v b^v$ in (*B*) and (*C*). The edge *cr* is straight and vertical and is intersected by the cylindrical surface of which *fc* is a part; the intersection is denoted by the point *c* in (*A*), by the dotted line $c'd'$ in (*B*), and by the dotted line $c''d''$ in (*C*). The points *a* and *c* are both projected into the

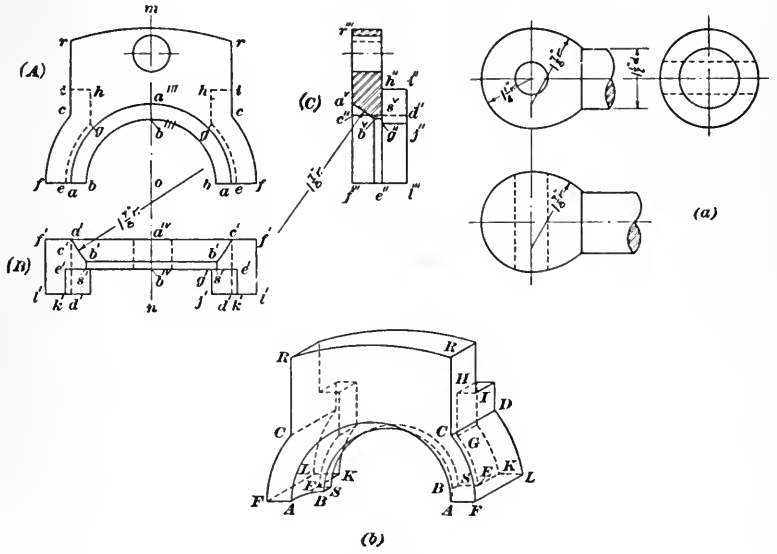

Fig. 16.

same point on $f'f'$ in (*B*) and into f'' in (*C*), because they both lie on the same surface and are at the same distance from the center line *mn*. On the back of the guard, there is a shoulder on either side of the center line, as indicated by the dotted lines *ihge*; as neither shoulder is touched by the cutting plane, the shoulder is not sectioned in (*C*), but its outline is indicated by $i''h''g''e''j''l''$, the line $g''j''$ in (*C*) and $g'j'$ in (*B*) being the projection of the line of intersection of the flat surface *hg* and the cylindrical surface *ge*. The dotted line in the hole in (*C*) is the edge that extends backward from *r*. The line $e'k'$ in (*B*) is the bottom edge (inside) of the shoulder; it is projected into the point e'' in

(*C*); this fact shows that the bottom ends of the guard are flat, the outline of the surface being *f'a'b's'c'k'l'*.

To assist in visualizing the guard, a perspective of it is shown in (*b*). By comparing the lines on the three views with the corresponding lines on the perspective, the reader should have no difficulty in forming a mental picture of this object. As a perspective is seldom given, the reader should make every effort to visualize from the three views, without the aid of the perspective. The three views will show him the shape of the front, the shape of the back, the shape of the top and bottom, and the shape of the bearing surface; knowing these, it will then be easy to visualize the entire object.

22. The Mercer Cell.—Fig. 17 shows a Mercer cell, which is used for the production of caustic soda and chlorine by electrolysis. A top view of the cell is shown at (*a*), and a cross section on the line *AB* is shown at (*b*). As indicated by the sectioning, the cell is an earthenware crock; it is open at the top and has five rectangular openings *a* in the cylindrical part. There is also a cover, shown at (*c*), which fits into the groove *b*. Attention is called to the funnel-shaped part *d*, which is a part of the crock; its shape will be readily perceived with the aid of the top view (*a*). The cylindrical part of the crock is covered with a layer of asbestos, extending to just above the top of the rectangular openings; this is held in place by perforated sheet iron, which acts as an electrode, and which is kept in position by three iron bands *f*, the latter being made in three pieces, flanged, and bolted, as shown at (*c*) and (*d*). Inside the crock are placed four carbon electrodes, which are attached to the disk *h*, as shown at (*e*); this view shows only two electrodes, the other two being behind the two that are seen. The disk *h* rests on the lugs *c*, shown in views (*a*) and (*b*). At (*f*) is shown the cover, which fits into the groove *b*. The projection *j* serves not only as a handle but also as an outlet through which the lead *i*, attached to the disk *k* at its center, passes. The lead *i* is connected to the generator, and it conducts the current from the generator to the carbons *g*. The chlorine gas escapes through the outlet *k*, to which is attached the pipe *l* that conducts the gas to the main, see (*c*).

An elevation of the entire arrangement is shown at (*c*), and a battery of six of these cells placed in a sheet-iron tank is shown at (*g*). This drawing is very simple, and requires no further explanation.

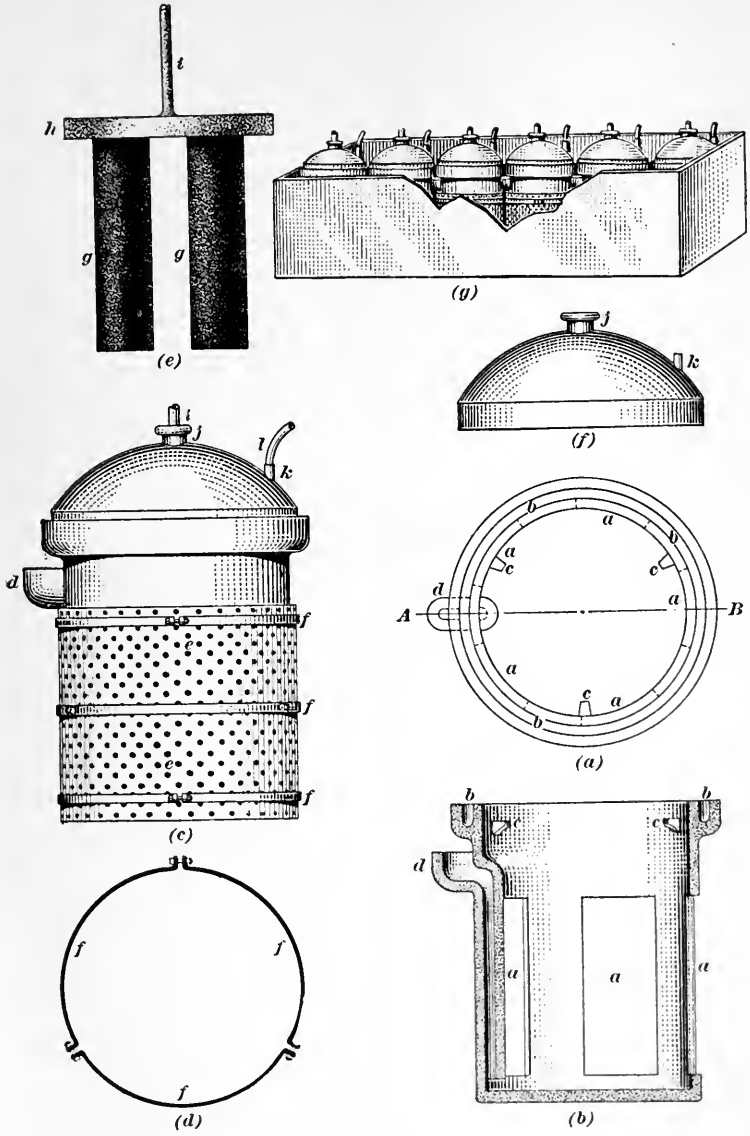

Fig. 17.

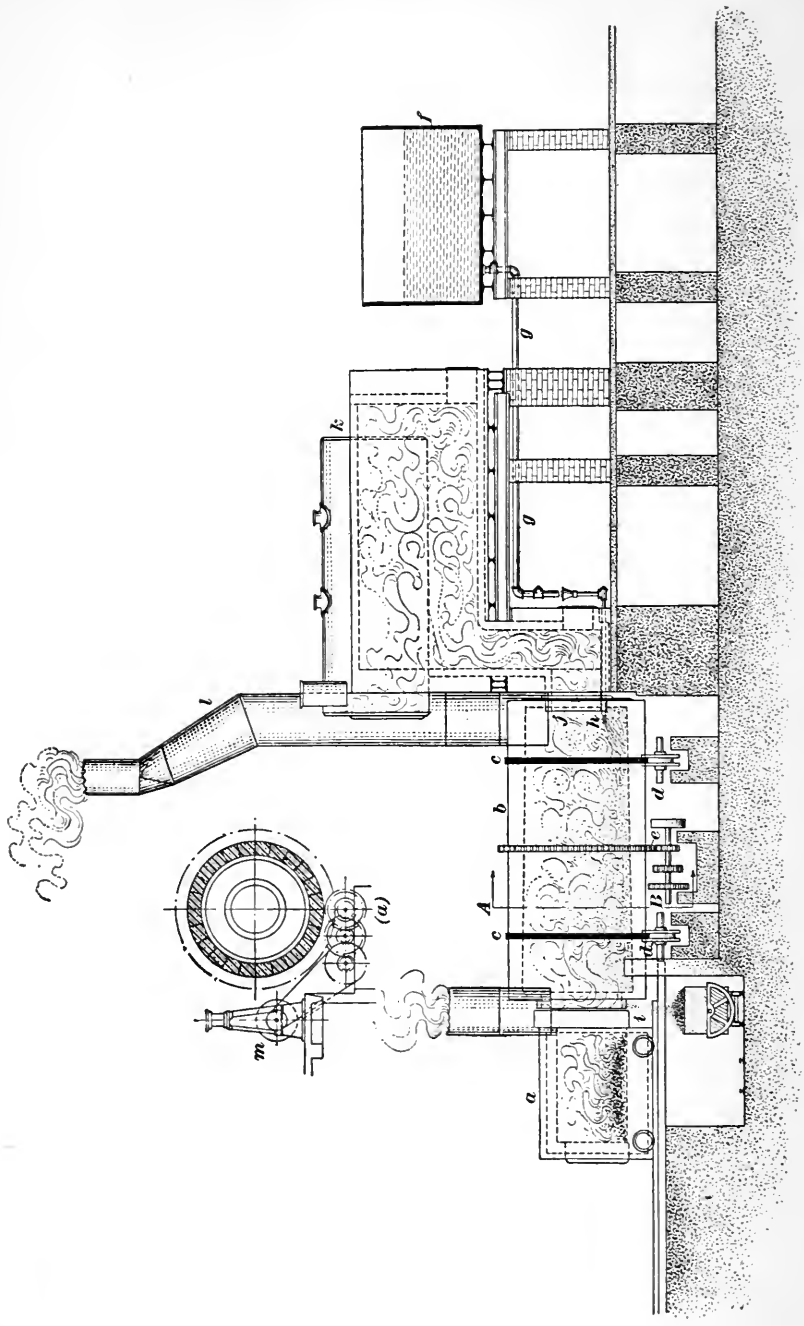

Fig. 18.

23. Rotary Drying Furnace.—Fig. 18 shows in a general way the manner in which the black liquor in the soda process is evaporated and the black ash is obtained in the recovery of the soda. The furnace *a* is mounted on wheels so it can be moved away from the rotary incinerator *b*, for cleaning and repairs. The incinerator is a horizontal steel cylinder, lined with fire brick, as indicated in the sectional view (*a*), which is a section on the line *AB* looking toward the right, as indicated by the arrows. Steel tires *c* are attached to the incinerator, and these rest on bearing wheels *d*, the wheels supporting the entire weight of the incinerator. The incinerator is caused to revolve by means of the gear and pinion arrangement *e*, the pinion being driven by a system of compound gears, which, in turn are driven by the engine *m*, as indicated in the sectional view. The thick liquor is stored in the tank *f*, from which it flows through the pipe *g* and nozzle *h* into the rear end of the incinerator through the opening *j*. The front end is also open; and as the ash is formed, it gradually accumulates, and falls out through this opening into a pit or into a car below it. The hot gases pass through the incinerator, through the opening *j*, under and through the boiler *k* (heating the water therein), and through the stack *l* into the atmosphere. The details of the process should now be clear without further explanation.

24. Worm Washer.—Fig. 19 shows a form of apparatus used for washing wood pulp. Two views are given, (*b*) being an end view and (*a*) a longitudinal section taken on the line *AB*. The apparatus consists of two perforated metal cylinders *a*, which are partly enclosed in a wooden box or, tank, *j*. The cylinders have at one end a tire *d*, which runs between the flanges of the bouble-flanged wheels *e*. At the other end, the cylinder is supported by the hollow trunnion *c*, which turns in the bearing *p*. The cylinder is thus supported by the wheels *e* at one end and the hollow trunnion at the other end. By referring to view (*b*), it will be noted that the box is divided into two compartments at the end *k*, which is funnel-shaped. Note particularly the shape of this partition, indicated by the dotted line *a b c d e f g h* in (*b*), a part of it being circular to permit the cylinder to turn in it, and, at the same time, follow the outline of the cylinder. The cylinder being thin, heavy iron bands *o* encircle it at intervals, in order to strengthen it. In both cylinders is a sheet-metal worm *b*, which is attached to the head of the closed end of the cylinder that carries the hollow trunnion. At the end of the trunnion, is a

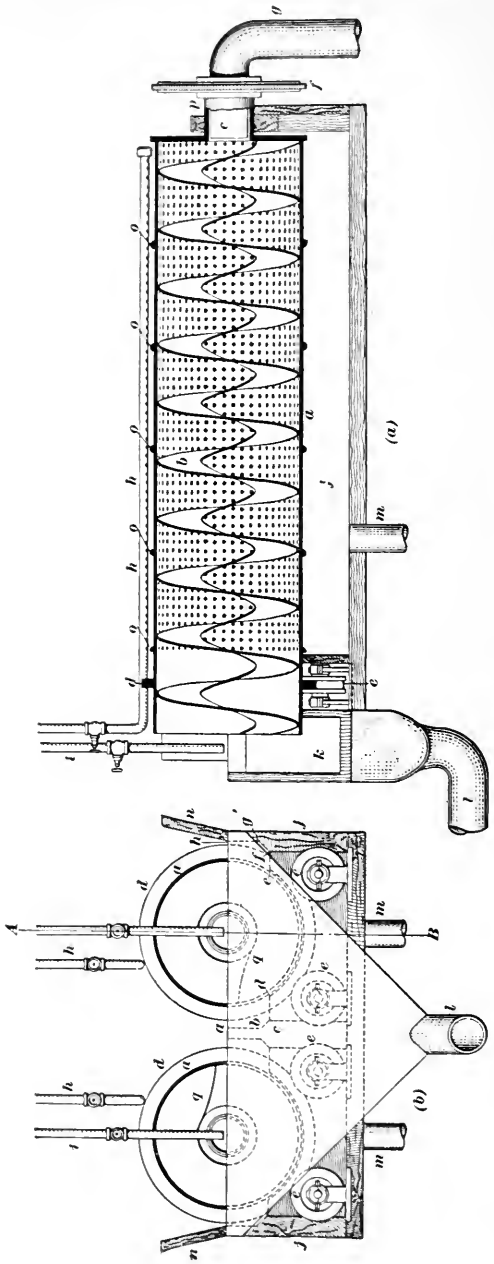

Fig. 19.

large sprocket wheel *f*; these sprocket wheels are connected by an endless belt *q*, so that both cylinders may revolve together. A perforated pipe *h* extends along the entire length of both cylinders, and is closed at the farther end. The operation of the apparatus is as follows: The stock to be washed flows through the pipe *g* and hollow trunnion *c* into the cylinder, which, as it slowly turns, carries it through the cylinder by means of the worm. Water flows through the holes in the perforated pipe *h* and enters the cylinder through its perforations, washing the stock and falling through the holes into the open space in the box below the cylinder, from whence it is discharged through the pipes *m*. The washed stock from the cylinders falls into the compartments *k*, and is washed into the exit pipe *l* by water discharged from the pipes *i*. The slanting boards *n* keep the water from splashing out of the box.

25. Remark.—The object of the last two figures is to illustrate the application of the apparatus described; consequently, the drawings fail to show many of the details that would be necessary to reproduce the apparatus. Drawings of this kind are a feature of printed matter—books, technical journals, catalogs, etc.—when the main object of the descriptive matter is to explain processes, the operation of machines, etc.

Assuming that the reader has carefully studied all that precedes this article and has conscientiously compared all letters of reference with the cuts, he ought now to be able to read intelligently most of the drawings that he is likely to encounter. Complicated ones may give him trouble, not from lack of knowledge, but from lack of practice in reading drawings. He will find, at times, that a knowledge of the application or purpose of the object drawn is necessary to a complete understanding of the drawing, as in Fig. 19, for instance. In any case, he ought to be able to read any drawing or to understand any illustration given in this course.

SECTION 4

ELEMENTS OF PHYSICS

(PART 1)

MATTER, MOTION, AND FORCE

MATTER AND ITS PROPERTIES

1. Definition.—The word matter, as used in its scientific sense, means anything that occupies *space*. Since any finite portion of space has length, breadth (or width), and thickness (or height or depth), it can be measured; and matter, which occupies a certain space, can also be measured, and in the same units. As will shortly be shown, matter can also be measured in units other than those used to measure space.

This property of matter, that it occupies space, is called **extension,** and it is a property (or characteristic) common to all matter. Any property that is common to everything is called a **general property** of that thing; hence, extension is a general property of matter.

2. General Properties of Matter.—When it is desired to speak of a certain amount of matter without specifying what it is, iron, water, air, clay, etc., it is called a **body.** A body may be of any size—so small as not to be visible or as large as the earth or larger—it simply means a certain amount of matter.

In addition to extension, matter possesses a number of other general properties: impenetrability, divisibility, indestructibility, inertia, porosity, compressibility, expansibility, elasticity, mobility, and weight. These properties are common to all matter and, consequently, to all bodies. A thorough understanding of the meaning of these words will be a great help in understanding physics and chemistry.

3. Three Forms of Matter.—All matter may exist in one of three forms or states: the *solid*, the *liquid*, or the *gaseous* state.

A **solid body** is one that retains its shape under ordinary conditions; thus, wood, stone, clay, iron, etc. are solids under ordinary conditions.

A **liquid body** (or **liquid**) is one that does not keep its shape unless placed in a vessel to keep it from spreading. It is characteristic of all liquids that they spread out and conform to the shape of the vessel that contains them. Further, if the upper surface is free, not touched by any solid, it will, under ordinary conditions, be a flat, level surface—for all practical purposes, a plane perpendicular to a diameter of the earth passing through the center of the surface.

A **gaseous body** (or **gas**) is one that completely fills any closed vessel that contains it. If the vessel be connected to another closed vessel, say by a pipe having a cock, so that communication may be opened or closed between the two vessels, and the cock be opened, the gas will fill both vessels completely; and any particular amount of space in either vessel, say 1 cubic inch, will contain exactly the same weight of gas; but the weight of a cubic inch of the gas will not be the same as in the first vessel before the cock was opened.

Most, if not all, substances can exist in all three states; thus, water under ordinary conditions is a liquid, when frozen it is a solid (ice), and when vaporized it is a gas (steam). The same is true of iron, which can be melted (liquefied) and vaporized, and of most other substances. Obviously, a substance can exist in but one state at a time.

4. Divisibility.—Divisibility means that any body may be divided into two or more bodies. A solid may be divided by cutting or by macerating or pulverizing it; a liquid may be divided by pouring some of it into another vessel; a gas may be divided as described in the last article. Liquids and gases are frequently referred to under the general name of **fluid bodies** or **fluids;** hence, a fluid may be either a liquid or a gas. There are, of course, other ways of dividing bodies than those here mentioned.

5. Molecules and Atoms.—If an ounce of salt be put into a pound of water, the salt will apparently disappear; the salt, however, is still in the water, as can be proved by various tests, as, for instance, by tasting. Here the water is said to *dissolve* the salt. What really occurred was that the water divided the salt into particles so small that they were no longer visible. By

stirring the water, the salt particles may be made to occupy every part of the water. If more water is added, the salty taste becomes less strong, and finally becomes indistinguishable; but the salt is still there, though it has been divided into extremely small particles. In accordance with modern theory, the division cannot be carried on indefinitely, for when a certain stage has been reached, any further division will change the nature of the body. For example, it is shown in chemistry that salt is a compound of sodium and chlorine, one part of each. When the division reaches a certain point, the particles can no longer be divided by any of the means heretofore mentfoned, and they are then called **molecules.** If a molecule be divided by chemical action or by the action of electricity or heat, the parts are called **atoms.** In the case of salt, the molecule when divided becomes two atoms, one being sodium and the other chlorine. It has not been found possible so to divide an atom, and it is therefore assumed that an atom is *indivisible.* Atoms do not usually exist in a free state, two or more being united to form a molecule.

A molecule, then, may be defined as the smallest particle of matter that can exist without changing the nature of the substance of which it forms a part; thus, a molecule of water consists of two atoms of hydrogen and one atom of oxygen, and if a molecule of water be divided, it will be no longer water, but three atoms, which will immediately reunite to form water again or unite among themselves to form molecules of hydrogen and oxygen. Molecules are exceedingly small, so small that they have never been seen and probably never will be seen. They are assumed to be spherical in shape and are known to be in very rapid motion, moving in all directions and constantly colliding. The molecules of a solid are more numerous and move through shorter distances than those of a liquid, and those of a liquid are more numerous and move through shorter distances than those of a gas.

6. Porosity.—All matter is porous, that is, the molecules do not completely fill the space occupied by the molecules; otherwise, there could be no movement of the molecules. Even though they may not be visible to the naked eye or under the highest powered microscope, all bodies have minute pores or channels, as is proved by the fact that water, for example, can be forced through a highly polished, thin steel plate. If matter were not porous, it would not be possible to force light or fluids through a

sheet of metal, no matter how thin it might be; but a piece of gold leaf 1/300,000th of an inch thick will allow light to pass through it.

7. Impenetrability.—**Impenetrability** refers to that property whereby two bodies cannot occupy exactly the same space at the same time. If a stone be placed in a vessel partly filled with water, the level of the water will be raised, showing that the stone has taken the place of the same amount of water. Advantage may be taken of this fact to find the volume of any irregular solid that is not dissolved in water. For instance, knowing the volume of the water before and after the solid is immersed in it, the difference will be the volume of the solid. If a solid be dissolved in a liquid, the volume may be the same as before, as, for example, dissolving a certain amount of sugar in a cup full of tea. This does not mean, however, that water is penetrable; the experiment simply shows that water is porous, and that the molecules of sugar have crowded between the molecules of water and occupy some of the space not filled by the water molecules. Again, if 50 c.c. (cubic centimeters) of alcohol are mixed with 50 c.c. of water, the volume of the mixture will not be 100 c.c., but 97 c.c.; this shows that one of the liquids is more porous than the other, with the result that the combined volume is less than the sum of the volumes before mixing.

8. Compressibility.—**Compressibility** refers to that property whereby bodies can be made to occupy a smaller space. Gases are very compressible; liquids and solids are only slightly compressible, but there is no substance that is incompressible. This necessarily follows from the fact that matter is porous, and the further fact that the molecules can be brought closer together and be made to occupy a smaller space than before.

9. Expansibility.—**Expansibility** refers to that property whereby the molecules can be forced farther apart and be made to occupy a greater space. All gases tend to expand and occupy a greater volume; but liquids and solids can usually be made to expand only by means of heat, most of them expanding when the temperature is raised, although a few expand under certain circumstances when the temperature is lowered.

10. Elasticity.—**Elasticity** is the name of the property by which, after a body has been distorted (shape changed) in any way and by any means (except division) the body tends to resume

its former shape when the cause that produced the distortion is removed and the former conditions are restored. While the body may not entirely regain its former shape, it always has a tendency that way and will partly regain it. A piece of rubber, for instance, may be stretched, and if not stretched too much, will resume its former shape when released. A ball of moist clay or putty may be pressed and made to assume and retain any shape but it does not retain exactly the shape it had when the pressure was removed. All fluids and some solids, such as steel, ivory, glass, etc., are very elastic.

11. Mobility.—The distance between one body and another body may be changed by moving either or both bodies. This property is referred to as **mobility.** Thus, no matter how firm the foundation or how heavy and rigid the structure on it, an earthquake will move it. The earth itself, the sun, and all the stars are moving; there is no such thing as an immovable body.

12. Inertia.—**Inertia** means without life, without power of self movement. As applied to bodies in a scientific sense, it means that if a body is at rest, it cannot put itself in motion; or if it is in motion, it cannot bring itself to rest or change its direction of motion. This will be explained more fully later.

13. Weight.—Every body exerts a certain attraction on every other body, which tends to make the bodies come together and touch one another. As between two bodies of ordinary size, this attraction is very small; but the earth is so large that this attraction between the earth and other bodies is very manifest, and the result is called **weight.** Every solid or liquid body, no matter how small, will fall to the earth unless sustained by some intervening body. Gases are also attracted by the earth, even though they may rise and go away from it when released. This may be proved by weighing an empty vessel in a *vacuum* (a place where there is no air or gas of any kind), then filling the vessel with a gas or mixture of gases, say air, and weighing again; the weight in the second case will be greater than in the first case, and the additional weight will be the weight of the air.

14. Indestructibility.—It is impossible to destroy matter. A body may be separated into molecules and the molecules into atoms, but the atoms will unite to form other molecules and other bodies, and there will be the same number of atoms as before. Matter may assume countless forms and undergo innumerable

changes, but the same number of atoms is present in the universe; this is otherwise expressed as the principle of *conservation of matter,* and it means that matter is **indestructible.** Matter may be transformed, but it cannot be destroyed, neither can the total amount of matter in the universe be changed.

15. Specific Properties of Matter.—In addition to the general properties, bodies possess certain other properties, not common to all bodies, which are therefore called **specific properties.** Some of the most important of these specific properties are rigidity, pliability, flexibility, malleability, ductility, tenacity, brittleness, and hardness. These terms may be defined briefly as follows:

Rigidity is the resistance offered by a body to a change in its shape; steel is very rigid. **Pliability** is the ease with which the shape of a body may be changed; lead, copper, etc. are pliable. A body is **flexible** when it can be bent without breaking, as a spring, a rope. **Malleability** is that property that indicates that the body possessing it may be rolled or hammered into sheets; gold is the most malleable of all known substances. **Ductility** is that property of the body possessing it which indicates that the body may be drawn out into wire; platinum possesses greater ductility than any other substance. **Tenacity** refers to the resistance offered by some bodies to being pulled apart; steel is extremely tenacious. **Brittleness** is the term used to indicate that some bodies are easily broken when subjected to sudden shocks; glass, ice, etc. are very brittle. **Hardness** is that property that indicates that a body possesses the ability to scratch some other body. The hardness of any particular body may be determined by using it to scratch some other body; it will be harder than the body it scratches and softer than any body that scratches it. The diamond is the hardest substance known; no substance will scratch a diamond except another diamond, in which case, either will scratch the other.

MOTION AND VELOCITY

16. Definition.—If during a certain space of time, the distance between two bodies is increasing or decreasing, one body is said to be in motion relative to the other body. If a body A occupy and continue to occupy a certain position on the earth's surface, A is said to be at **rest** (or is **fixed**) *relative to the earth;* if, now, the

distance between A and another body B continually varies during a time t, B is said to be in *motion relative to* A, or B has **motion** relative to A.

The use of the word *relative* in the last paragraph requires a special explanation. *All motion is relative;* there is nothing in space that is absolutely at rest. The circumference of the earth at the equator is about 25,000 miles, and it turns around on its axis once in 24 hours or 86,400 seconds; hence, an object on the equator is moving around with the earth at the rate of $\frac{5280 \times 25000}{86400} = 1524$ feet every second. The earth is also moving in its orbit about the sun with a speed of about 18 miles every second; the sun is also in motion, etc. Consequently, when it is stated that a body is at rest, the usual meaning is that the body is at rest relative to a point on the earth's surface; and if a body is in motion relative to this point, it is moving *toward* or *from* that point.

A body may be in motion relative to one point and at rest relative to another, both at the same time. For instance, suppose a person to be on a slowly moving railway train; if he walk from one end of the train to the other at the same rate of speed that the train is moving, but in the opposite direction, he will be in motion relative to a fixed point on the train, but at rest relative to a fixed point beneath him on the earth. In other words, the center of his body will remain over the point on the earth until he reaches the end of the train.

17. Path of a Body.—In order to compare motions, it is assumed that the motion is the same as that of a very small particle of the body at the center of gravity of the body; and the line described by this particle is called the **path** of the body. The path may be straight or curved, but the length of the path is always equivalent to a right line having the same length. If the path is a right line, the direction of motion is along that line, *i.e.*, along the path; but if the path is a curve, the direction of motion is along a *tangent* to the path at the point occupied by the body (center of the body) at the instant considered. This will be explained more fully in the section on mechanics.

18. Velocity.—**Velocity** is *rate* of motion. If the speed of a body is uniform, that is, if the body passes over equal distances in equal times, the velocity is equal to the distance divided by the

time. Thus, if v = the velocity, s = the distance, and t = the time,

$$v = \frac{s}{t}$$

The unit of velocity is a compound unit, because it requires more than one unit to express it—a unit of distance (length) and a unit of time. If s is measured in feet and t in minutes, the unit of velocity is one foot divided by one minute, and is called **one foot per minute,** the word *per* meaning *divided by;* whenever the word per occurs in the name of a compound unit, it always has this meaning. If s is measured in miles and t in hours, the unit of v is *one mile per hour;* and if s is in centimeters and t in seconds, v is in *centimeters per second.*

19. When a body passes through equal distances in equal times, its velocity is said to be **uniform** or **constant** otherwise it is **variable.** But whether uniform or variable, the velocity of a body at any instant is the distance (length of path) it would travel in a unit of time if the velocity it had at the instant considered were uniform. For instance, suppose the speed of a body were such that at the instant it arrived at a certain fixed point, it would travel 852 feet in one minute if it continued at the same rate of speed for one minute; then the velocity at the point considered is 852 feet per minute, or $\frac{852}{60} = 14.2$ feet per second. If the velocity in miles per hour were desired, note that if the body kept up the same rate of speed for one hour = 60 minutes, it would travel $852 \times 60 = 51{,}120$ feet $= \frac{51120}{5280} = 9.6\frac{9}{11}$ miles; hence, the velocity at the instant considered is $9.6\frac{9}{11}$ miles per hour.

20. Acceleration.—Acceleration is rate of change of velocity. For example, if the velocity of a body is not uniform, it either increases or decreases, and the rate of increase or decrease is called *acceleration,* when the rate of change is uniform, the acceleration is also uniform. Thus, suppose the velocity of a body at a certain instant were 120 feet per second, and 4 seconds later the velocity were 180 feet per second. If the gain in speed were constant, the acceleration would also be constant, and the gain in velocity would be at the rate of $\frac{180 - 120}{4} = 15$ feet per second every second; this would be expressed as 15 *feet per*

second per second, or 15 ft. per sec.^{2}, which latter form means that the time in seconds is to be squared. The unit of acceleration is almost invariably taken as one foot per second per second = 1 ft. per sec.^{2} or as one centimeter per second per second = 1 cm. per sec.^{2}

If, in the case just mentioned, the velocity had decreased uniformly from 120 ft. per sec. to 80 ft. per sec., the acceleration would have been $\frac{80-120}{4} = -10$ ft. per sec.^{2}, the acceleration in this case being negative.

To understand clearly the reason for squaring the time in the unit of acceleration, perform the calculation by using the units in connection with the numbers. Thus, $\frac{80\,\frac{\text{ft.}}{\text{sec.}} - 120\,\frac{\text{ft.}}{\text{sec.}}}{4 \text{ sec.}}$

$$= \frac{(80 - 120)\,\frac{\text{ft.}}{\text{sec.}}}{4 \text{ sec.}} = -10\,\frac{\text{ft.}}{\text{sec.}^2} = -10 \text{ ft. per. sec.}^2$$

FORCE, MASS, AND WEIGHT

21. Force.—By reason of its inertia, a body cannot put itself in motion or bring itself to rest or change its shape; to do any of these things, the body must be acted upon by some *force*. Therefore, **force** may be defined as that which tends to change the state of rest or motion of a body or which acts to produce deformation (change of shape) of a body. In the case of a gas, the force due to the motion of the molecules causes the body to expand and fill the vessel that contains it; in the case of a liquid, the force due to the earth's attraction causes the liquid to spread and conform to the shape of the vessel holding it, and makes the upper surface flat.

Forces are called by various names, according to the effects they produce, some of them being: *attraction, repulsion, adhesion; cohesion, gravitation* (or *weight*), *action, reaction, friction*, etc. But, whatever the effect produced, every force is equivalent to a *pull* or a *push*. A **pull** usually tends to elongate (stretch) the body on which it acts, and a **push** usually tends to compress (shorten) the body on which it acts.

22. Cohesion and Adhesion.—**Cohesion** is the force that holds molecules together to form a body; it is an attractive force

between *like* molecules. The force of cohesion is extremely weak in the case of gases and extremely strong in the case of solids. When two bodies are held together by the attraction of *unlike* molecules, the attracting force is called **adhesion;** thus, two pieces of wood may be held together by glue, and the molecules of glue being different from those of wood, the force holding the bodies together is called adhesion. Likewise grease adheres to iron, wax to paper, etc.

23. Measure of Force.—The force with which the earth attracts bodies on or near its surface is called the **attraction** (or **force**) of gravity or, more simply, gravity or weight. **Weight,** then, is the force (pressure or push) exerted by a body resting on the earth or on another body. If the body be suspended from another body, the connection being a flexible body, say a string or a spring, it will exert a pull on the second body and will stretch the string or spring. In either case, the effect of the force will be exactly the same. The force of gravity is, therefore, very convenient for comparing forces.

FIG. 1.

The force of gravity always acts in the direction of a line drawn from the center of gravity of the body to the center of the earth; this line is called a **vertical line,** and any line perpendicular to it is a **horizontal line.** It will thus be seen that any line (imaginary) drawn on the upper (free) surface of a liquid is a horizontal line. A vertical line is also called a **plumb line,** because if a plumb bob be suspended from a string, the centerline of the string will point to the earth's center when the plumb comes to rest; hence, this line is vertical.

24. Fig. 1 shows a spring balance, from the hook of which is suspended a standard one-pound weight; the indicator then points to the 1 mark on the scale. If, now, the one-pound weight be replaced by another body that brings the indicator to the 1 mark, the force exerted in both cases is the same. Consequently, the force with which either body presses against any other body on which it rests is called *one pound.* It is evident that a weight of one pound will exert a force (pressure) of one pound when resting on another body; consequently, forces are measured by their equiva'ent in weights, and are expressed in

pounds, grams, or kilograms. For instance, the force exerted by a hammer in driving a nail a certain distance into a board would be measured by the weight of a body that, resting on the nail, would press it the same distance into the wood in the same time; the force with which steam presses against a piston of an engine is equal to the weight that would exert an equal pressure on the piston. Observe that both weight and force are measured with a spring balance, the measure of either being determined by the amount that the spring is stretched, as indicated by the scale.

25. Mass.—By mass is meant the amount of matter contained in a body. A little consideration will show that the mass of a body cannot be determined by measuring its volume. A cubic foot of spruce wood will weigh, say, 35 pounds, while a cubic foot of cast iron will weigh 450 pounds; it is evident, therefore, that a cubic foot of cast iron contains more matter than a cubic foot of spruce. In other words, the mass of cast iron is almost 13 times as great as the mass of an equal volume of spruce wood. Consequently, the mass of a body is determined by weighing it; but the mass is not equal to the weight, as will now be shown.

26. If a body be allowed to fall freely in a vacuum at a place whose latitude is about 41°, or very nearly that of New York, the uniform acceleration will be 32.16 ft. per sec.^{2} The body will have this acceleration no matter what its weight, whether it be 1 ounce or 1 ton, because it makes no difference whether the body be divided into $2000 \times 16 = 32000$ equal parts and all fall separately or whether they be joined together and all fall as one body. The force which causes the body to fall and gives it the acceleration it receives is the force of gravity, which is equal to the weight of the body, and this is a constant (uniform) force acting on the body during its time of falling. It is therefore plain that if a body weighing one pound receive an acceleration of 32.16 ft. per sec.^{2} when falling freely, a force of one pound acting on a body weighing one pound and free to move will give it the same acceleration. It would also seem as though a force of one pound acting on a body weighing 2, 3, n times as much, that is, 2, 3, n pounds, would receive an acceleration of only $\frac{1}{2}$, $\frac{1}{3}$d, $\frac{1}{n}$ th as much, and experiment shows this to be the case. Therefore, if f = the force acting on a body, w = the weight of the body, a = the accelera-

tion produced by the action of the force f, and g = the acceleration produced by gravity,

$$f : w = a : g$$

$$f = \frac{wa}{g} = \frac{w}{g} \times a = ma,$$

when $m = \frac{w}{g}$. To find the value of w, it must be found by weighing the body with a beam scale instead of a spring balance (in order that standard weights may be used; the spring balance gives true weight only under specific conditions); the value of g may be found by direct experiment or by calculation; then, knowing the value of g for any locality and weighing the body under consideration on a beam scale, the value of m can be found by substituting the known values in the formula. The value thus found for m is called the *mass of the body.* From the preceding equation, $f = ma$, that is, *the force which will give to any body an acceleration a is equal to the mass of the body multiplied by the acceleration.*

27. The reason for defining the mass of a body as its weight at any particular place divided by the value of g at that place is that the value of g is different for different places on the earth's surface; it is least at the equator and greatest at the poles, because the earth is not a perfect sphere, a point on the surface at the poles being nearer the earth's center than a point on the surface at the equator. The farther the body is from the center the smaller is the value of g; consequently, the value of g is less at the top of a high mountain than at sea level. The weight of a body varies directly as the value of g, but the mass, which measures the quantity of matter remains constant. Letting w' and w'' (read w prime and w second) be the weights of a body at two different places, m the mass of the body, and g' and g'' the values of the acceleration produced by gravity at those places,

$$w' : w'' = g' : g''$$

or $w'g'' = w''g'$, from which $\frac{w'}{g'} = \frac{w''}{g''} = m$. This last equation shows that m is constant, since if g decreases, w also decreases, and if g increases w also increases, both in the same proportion.

28. The C. G. S. System.—In what is called the **C. G. S. system** (C. G. S. is the abbreviation for centimeter-gram-second), the value of g is expressed in centimeters per sec^2. For latitude

45°, which is half way between the equator and the poles, $g = 980.665$ cm. per sec.^{2}, very nearly, and this value of g is now quite generally accepted as the *standard* by scientists. Then, since 1 cm. = .03280843 ft., 980.665 cm. = $980.665 \times .03280843$ = 32.1741 ft. For latitude of New York, $g = 980.223$ cm. per sec.^{2} = 32.1599, say 32.16 ft. per sec^2.

29. Weight.—As previously stated, weight is caused by the attraction of the earth. This attraction is mutual, the body attracting the earth as much as the earth attracts the body. The mass of the earth is so great, however, that the distance the earth moves is too small to be measured. The equatorial diameter of the earth is about 26.4 miles greater than the polar diameter; in other words, a person standing at the pole (north or south pole) is over 13 miles nearer the center than when he stands on the equator. The nearer a body is to the center the greater is the attractive force (force of gravity), the greater is the value of g, and the greater is the weight of the body when measured with a spring balance. If, however, a body is weighed with a beam scale, the weight will be the same anywhere, because the weight of the counterpoise changes in the same proportion as the weight of the body. For example, if a barrel of sugar weighs 300 pounds at New Orleans on a beam scale, it will weigh the same at New York, at London, or at the pole, using the same scale. But if a spring balance be used that has been graduated in accordance with the value of $g = 980.665$ cm. per sec.^{2} = 32.1741 ft. per sec.^{2}, the weight recorded at New Orleans will not be the true weight. The value of g for New Orleans is 32.1303 ft. per sec.^{2} The true weight is the weight that would be recorded at a place where the value of g is 32.1741 ft. per sec.^{2}, and may be found from the proportion of Art. **27**, or $300 : w = 32.1303 : 32.1741$, from which $w = 300.409$ pounds. This is the weight that would be recorded on a beam scale, if the weight of the counterpoises were standardized to correspond with $g = 980.665$ cm. per sec.^{2} = 32.1741 ft. per sec.^{2}

In commercial transactions and in ordinary engineering calculations, no attention is paid to the variation in the value of force (or weight) due to difference in latitude; but in all scientific investigations requiring accuracy in results, these variations must be considered. For all practical purposes, the value of any force at any place may be considered as the equivalent of the weight that will produce the same effect at that place.

30. Density.—Density is the quantity of matter contained in a unit of volume; it is the *mass of a unit of volume.* If the density of a body be represented by D, the mass by m, the volume by V, the weight by w, and the acceleration due to gravity by g,

$$D = \frac{m}{V} = \frac{w}{gV} \qquad (1)$$

Solving this equation for m,

$$m = DV \qquad (2)$$

that is, the mass of any body is equal to the product of its density and volume.

Density is also frequently defined as the *weight* of a unit of volume, in which case,

$$D = \frac{w}{V} \qquad (3)$$

The density of gases is almost always expressed as in the second of the above definitions. If the unit of weight be taken as 1 pound and the unit of volume as 1 cubic foot, the density of a body by the second definition is in pounds per cubic foot, and the density may always be found by weighing 1 cubic foot. Another name for the weight of a unit of volume is **specific weight;** thus, if the weight of a cubic foot of cast iron is 450 pounds, its specific weight is 450 pounds per cubic foot, which is also the density in accordance with the second definition. In accordance with the first definition, the density of cast iron is $\frac{450}{32.1741 \times 1}$ 13.98—. There is no name for the unit of density as determined by formula (1), which may be called the specific mass; neither is there any for the unit of mass. Consequently, for the want of a better name, these units may be called *density units* and *mass units*, respectively.

WORK AND ENERGY

31. Work.—That point of a body at which a force is applied or at which it may be considered as acting is called the **point of application.** If, as the result of the action of a force, the point of application is moved through a certain distance, **work** is done. Thus, if a body weighing 15 pounds is lifted 6 feet vertically, work is done in doing this. The unit of work is usually taken as a *foot-pound;* this is a compound unit, and means that a resistance of one pound has been overcome through a distance of one foot, and is

exactly equivalent to 1 pound × 1 ft. In other words, *to find the work done, multiply the force (in pounds) by the distance (in feet) through which it acts.* The work done in raising 15 pounds through a vertical distance of 6 ft. is $15 \times 6 = 90$ ft.-lb.

Suppose the average pressure on the piston of a steam engine is 63 pounds per square inch, that the diameter of the piston is 15 inches, and that it moves 18 inches during one stroke; then the work done per stroke may be found as follows. The total average pressure during the stroke is 63 times the area of the piston in square inches, since the average pressure is 63 pounds per sq. in.; hence, total pressure $= 63 \times \frac{\pi}{4} \times 15^2$. The distance through which this pressure (force) acts is 18 in. $= \frac{18}{12} = 1.5$ ft. Consequently, the work done is $1.5 \times 63 \times .7854 \times 15^2 = 16{,}700$ ft.-lb.

32. *Work is the overcoming of a resistance through a distance;* if a force acts on a body without moving the point of application, no work is done. For instance, if a man try to lift a stone that is too heavy for him to move, he will apply considerable force to the stone, but no work will be done on the stone. In the case of a falling body, gravity is the acting force, and equals the weight of the body; the work done is the weight of the body multiplied by the vertical distance through which the body falls.

Observe that the work done is not dependent on the time it takes to do it. Thus, 15 pounds raised through a vertical distance of 6 feet is equal to $15 \times 6 = 90$ ft.-lb. of work; and it makes no difference whether it took one second to raise the weight or one month, the work done is the product of the acting force and the distance through which it acts. It should also be noted that when gravity is the acting force, it makes no difference how the body gets from one level to the other (that is, what the shape of the curve representing its path), the work done is the weight of the body multiplied by the *vertical* distance (perpendicular distance) between the level that includes the starting point and the level that includes the stopping point. Thus, in hauling a wagon up a hill, suppose the weight of the wagon and its load is 900 pounds and that the difference of level between the top of the hill and the bottom is 120 feet; then, neglecting friction and other resistances, the work done is $900 \times 120 = 108{,}000$ ft.-lb., regardless of how the top of the hill was reached. The result is the same as though the wagon had been lifted bodily 120 ft.,

as by an elevator. This is because when the wagon moves up the hill, the acting force is not equal to the weight of the body, but is considerably less, depending on the slope. When the body moves vertically up or down, then the acting force is equal to the weight.

33. Energy.—Energy means capacity for doing work—ability to do work. A body in motion cannot instantly be brought to rest; to bring it to rest, a force must act through a distance, no matter how short. For instance, when a blow is struck with a hammer, a dent is made in the body struck, and the depth of this dent is the distance passed through by the hammer in coming to rest. This distance (in feet) multiplied by the force of the blow is the work done. At the instant the hammer strikes, but before any work is done, the hammer has capacity for doing the work that is done as the result of the blow, and this capacity for doing work is called *energy*.

Energy is measured in the same units as work, that is, in foot-pounds. Suppose a body weighing 500 pounds to fall through a vertical height of 16 ft.; the work it can do is exactly equal to the work required to be done on the body to raise it through a vertical height of 16 ft., neglecting resistance of the air, friction, etc. in both cases. This work is $500 \times 16 = 8000$ ft.-lb.; consequently, the energy of the body is 8000 ft.-lb. also.

34. Kinds of Energy.—It is customary to divide energy into two classes—*potential energy* and *kinetic energy*. **Potential energy** is that due to the *position* of a body. Consider, for example, a pile driver. When the hammer that drives the pile has been raised to its highest point and is ready to be released, it possesses energy due to its position, the amount being equal to the weight of the hammer in pounds multiplied by the height in feet of the hammer above the pile, which is equal to the vertical distance between the bottom of the hammer and the top of the pile. This energy is potential energy, so called because it may or may not be used. *Potential* means possible; hence, potential energy means possible energy.

Kinetic energy is actual energy—it is the energy of a body in motion. In the previous illustration, when the hammer is released, it falls and the potential energy is gradually changed into kinetic energy until, at the instant the hammer hits the top of the pile, all the potential energy has been changed into kinetic

energy. The sum of the potential energy (if any) and the kinetic energy (if any) is the **total energy.** Thus, when the hammer has fallen through ¼th the height, ¼th of the potential energy has been changed to kinetic energy; hence, the total energy is made up of ¾th of the original potential energy and the other ¼th is kinetic energy. Again, when a rifle is fired, the potential energy of the powder is changed to kinetic energy in the barrel of the gun; the kinetic energy is converted into work on the bullet, and when the bullet leaves the gun, it has kinetic energy, which is converted into work when the bullet is stopped. It will be noted that the bullet does not have potential energy at any time; it has either no energy at all or it has kinetic energy. If, however, the bullet be fired vertically upward, and it meet with no resistance from the air, the action of gravity causes the velocity to decrease, until it stops, but immediately begins to fall. During the rise, the kinetic energy has been changing into potential energy, and at the instant it begins to fall, all the kinetic energy has been changed to potential energy. As it falls, the potential energy decreases and the kinetic energy increases; and when it again reaches the earth, all the potential energy has been changed to kinetic energy, equal in amount to the original kinetic energy it had when it left the gun.

All work is the result of kinetic energy, and potential energy of some kind must be converted into kinetic energy before any work can be done. In the case of the gun, the potential energy was in the powder; in the case of a steam engine, the potential energy is in the steam; and in the case of the pile driver, the potential energy was in the position of the hammer before it was released. Potential energy is always *stored energy*, while kinetic energy is active energy that is, or can be, transformed into work.

Energy exists in innumerable forms; like matter, it cannot be destroyed, but may be changed in various ways. The energy stored in coal was received from the sun millions of years ago; it is changed into heat (a form of kinetic energy), by combustion, and generates steam; steam drives the engine, which, in turn, drives a dynamo that generates electricity; thus energy that originally came from the sun is converted into electric energy, used to drive motors, light lamps, etc. The energy stored in food is converted into muscular energy, and enables us to live, move, work, and play.

HYDROSTATICS

PASCAL'S LAW

FLUID PRESSURE

35. Equilibrium.—A body is said to be in **equilibrium** when it is at rest under the action of forces or if in motion, there is no change in its *velocity* or *direction* of motion. A block of stone resting on the earth is in equilibrium; the forces acting on the stone are the force of gravity, which acts downwards and pulls the block toward the center of the earth, and the pressure of the earth against the block, called the **reaction** of the earth, which acts *upwards* and prevents the block from moving toward the center of the earth. A stick balanced on a knife edge is in equilibrium; gravity tends to pull the part of the stick on one side of the knife edge one way and the other part the other way, the two *balancing* each other; but the total pull toward the earth is the weight of the stick, and this is resisted by the reaction of the knife edge, which acts upward. A person riding on a railway train that is moving in a straight line, along level ground, at a constant rate of speed is in equilibrium; the force exerted by the locomotive in pulling the train just balances that required to overcome the resistance of the air, friction, etc.; but, if the train commences to go around a curve or up or down a grade, the person will no longer be in equilibrium—the *direction* of motion has been changed; or, if the speed of the train is increased or decreased, he will no longer be in equilibrium—the *velocity* has been changed. If the change is sudden, he will be thrown forwards, backwards, sideways, up, or down, according to the nature of the change in motion.

Hydrostatics is that branch of science which treats of fluids at rest under the action of forces, that is, of fluids in equilibrium; the word is derived from the Greek, and literally means water at rest, *hydro* meaning water and *statics* meaning standing or at rest. Hydrostatics is usually limited to water and other liquids, but may also be applied to gases.

36. Pressure.—When a steady force having the effect of a push acts on a body, it is called a **pressure.** When the force acts very suddenly and for a short time, it is called an **impulse,**

or a **blow**; but, if desired, any blow may be considered as a pressure acting for a very short time.

Suppose a log having a mean diameter of 16 in., 20 ft. long, with ends at right angles to the axis, and weighing 960 pounds to stand on one end; it will exert a pressure of 960 pounds on the surface that supports it, and this pressure will be evenly distributed over a surface whose area is equal to the area of the end of the log. Since the log is not exactly round, the area of the end may be considered as equal to the area of a circle whose diameter is the same as that of the log, but taking π equal to 3 instead of 3.1416. Hence, the area is $\frac{3}{4} \times 16^2 = 192$ sq. in. The pressure exerted by the log on each square inch is then $\frac{960}{192} = 5$ pounds per square inch. When a pressure is stated as a force per unit of area, it is called **specific pressure,** and the pressure on the entire area is called the **total pressure.** In the above case, the total pressure was 960 pounds, and the specific pressure was 5 pounds per sq. in.

37. Specific pressures are generally stated as pounds per square inch or pounds per square foot, but in connection with fluid pressure, they may be stated as feet of water, inches of mercury, or atmospheres, terms that will be explained later. In the metric system, specific pressures are usually expressed in kilograms per square centimeter or kilograms per square meter; meters of water and millimeters of mercury are also used.

38. Total pressures may be considered as distributed over an area or as acting on a line passing through the center of gravity of the area pressed against. Thus, in the case of the log standing on one end, the total pressure of 960 pounds may be considered as distributed over an area equal to the area of one end or as a concentrated force that acts at the center of gravity of the area. Insofar as any movement of the body under the action of the force (pressure) is concerned, the effect will be the same in either case.

39. Transmission of Pressure.—When a force (pressure) acts on a solid, it is transmitted through the solid in a line that forms an extension of the **line of action;** thus, if one end of a chisel be hit with a hammer or mallet, the other end of the chisel will impart to any body it touches a blow of the same force as that which was received by the chisel. In other words, the chisel transmitted the

blow it received at one end to the other end. The blow, itself, measured as a force, may be different at the two ends, by reason of a difference in the shapes of the ends, and the material of the body struck by the chisel will probably be different from that of the chisel; but all the *energy* received at one end of the chisel will be transmitted undiminished to the other end, provided the blow is not hard enough to injure (deform) the chisel in any way. There will be no pressure in any direction except lengthwise of the chisel. The same is true of a weight resting on a pillar; the pressure due to the weight is transmitted from one end of the pillar to the other, and the total pressure is the same at either end.

In the case of fluids, the result is entirely different, because the molecules of the fluid are free to move in any direction. When pressure is applied to a solid that is not too pliable, it retains its shape for all practical purposes, and any movement of the molecules must be lengthwise only. There is a crosswise (lateral) movement, but it is so slight that for ordinary pressures, it may be neglected, and the lengthwise (longitudinal) movement may also be neglected.

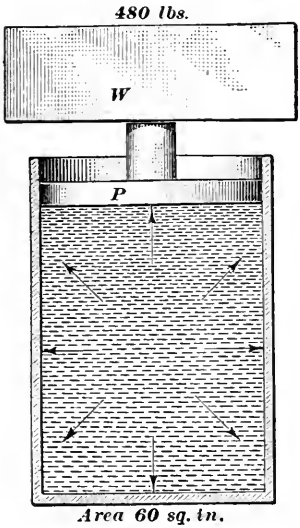

FIG. 2.

40. When a fluid is subjected to pressure, the pressure is transmitted undiminished in *every* direction. It is to be noted that the word pressure in this case means specific pressure. Referring to Fig. 2, which represents a vertical longitudinal section passing through the axis of a cylindrical vessel, suppose the vessel to be filled with a fluid, say water, and fitted with a tight-fitting piston P, which rests on top of the water. Suppose further that a weight W of 480 pounds is placed on top of the piston, as shown. The pressure on top of the water due to the weight W will be 480 pounds and this will also be the pressure on the bottom of the vessel (neglecting the weight of the water), the result being the same as though the space occupied by the water were a round block of wood. If the area of the bottom of the vessel is

60 sq. in., the specific pressure is $\frac{480}{60} = 8$ pounds per sq. in., and this specific pressure is transmitted in every direction, as indicated by the arrows—upward, downward, laterally, and at any angle whatever.

Had the vessel been filled with a gas instead of water, the same result would have been obtained, the only difference being that water is only very slightly compressible and the change in volume is not noticeable; but gas is so compressible that the volume would be very much smaller. For this reason, water will be adopted as the fluid under consideration in what follows, unless otherwise specified; but what is true of water in general is also true of any other liquid and of gases.

41. Pascal's Law.—The law governing the transmission of pressure in fluids confined in a closed vessel was discovered by Pascal, a famous French scientist and mathematician (1623–1662), and is known as Pascal's law; it may be stated as follows:

Specific pressure exerted on any fluid confined in a closed vessel is transmitted in all directions and acts on all surfaces touched by the fluid in a direction perpendicular to those surfaces.

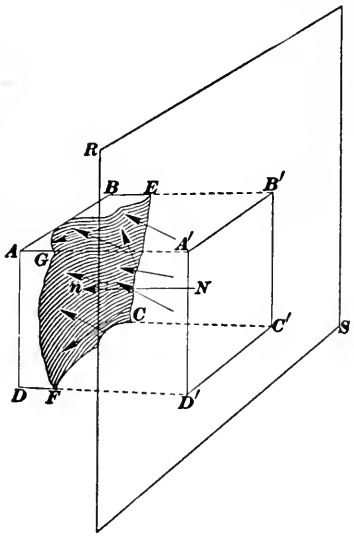

Fig. 3.

42. If the surface pressed against by the fluid is a curved surface, the perpendicular to the surface at any point is called a **normal,** and a normal to a curve at any point is perpendicular to the tangent to the curve at that point. This is illustrated in Fig. 3, where *ECFG* represents a curved surface, and the arrows *a*, *b*, *c*, *d*, etc. represent normals to this surface. Let *n* represent the center of gravity of the surface, and let *P* represent a pressure which, acting on the surface at *n* in the direction of the normal *N* will produce the same effect on the surface as is produced by the pressure of the fluid. To find the value of *P*, let *RS* be a plane perpendicular to the normal *N*, and let *A'B'C'D'* be the

projection of $ECFG$ upon the plane RS. Let a = the area of $A'B'C'D'$ and p = the specific pressure exerted on the fluid; then

$$P = pa,$$

that is, the total normal pressure against any surface is equal to the specific pressure multiplied by the projected area of the surface, projected on a plane at right angles to the normal drawn through the center of gravity of the surface. This total normal pressure tends to move the entire surface under consideration in the direction of the normal. In the case of the cylinder, Fig. 2, the diameter of the cylinder is $d = \sqrt{\frac{4a}{\pi}} = \sqrt{\frac{4\text{x}60}{3.1416}} = 8.74$ in., nearly. Assuming that the depth of the water in the cylinder is 25 in., the projected area of one-half the cylinder on a plane perpendicular to the normal through the center of gravity of the half-cylinder (which will be on a line midway between the top and bottom and midway between the parallel sides of the half-cylinder) will have the shape of a rectangle whose length is 25 in. and breadth is 8.74 in. The projected area will then be $25 \times 8.74 = 218.5$ sq. in. Since the specific pressure is 8 lb. per sq. in., the total normal pressure on the half-cylinder is $218.5 \times 8 = 1748$ pounds. This same pressure acts on the other half of the cylinder, but in the opposite direction. Therefore, the total lateral pressure due to the weight of 480 pounds tending to separate one-half of the cylinder from the other half is 1748 pounds or almost four times the weight, in this case.

43. Figure 4 represents a flask filled to the line mn with water, the space between mn and the bottom of the plunger p being filled with air. As the handle H is pushed down, the air is compressed, being confined between the top of the water and the bottom of the plunger, and the greater the pressure the smaller becomes the volume of the air. The pressure is transmitted in all directions through the air, from the air to the water, and in all directions through the water. Assuming that the pressure on H is such that the pressure on the confined air is 12 pounds per square inch, this specific pressure will be transmitted to all surfaces touched by the water. Little pistons are placed in the vessel at a, b, c, etc., and their cross-sections have the following areas: $a = 1.5$ sq. in., $b = 2.75$ sq. in., $c = 2.25$ sq. in., $d = 3.5$ sq. in., $e = 4.75$ sq. in., $f = 2.5$ sq. in., $g = 5.5$ sq. in., and $h = 3$ sq. in. Then, neglecting the weight of the water, the

forces acting on the inside faces of the pistons, tending to force them out, and which must be resisted by an equal and opposite force on the other side of the pistons, indicated by the arrows, are respectively $1.5 \times 12 = 18$ pounds, $2.75 \times 12 = 33$ pounds, $2.25 \times 12 = 27$ pounds, $3.5 \times 12 = 42$ pounds, $4.75 \times 12 = 57$ pounds, $2.5 \times 12 = 30$ pounds, $5.5 \times 12 = 66$ pounds, and $3 \times 12 = 36$ pounds. These are all normal pressures; the pistons are supposed to be round, but the faces may be flat or curved, the areas given above being the projected areas, and equal to the squares of the diameters of the pistons multiplied by .7854.

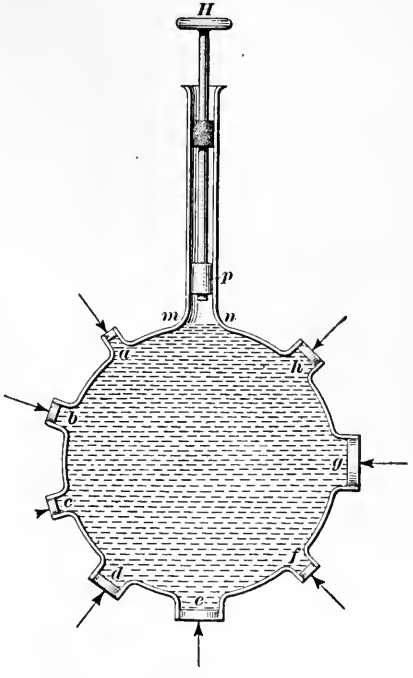

Fig. 4.

44. Hydrostatic Machines.—A hydrostatic machine is a device for raising heavy loads or exerting great pressure as in pressing bales of pulp. The principle governing their operation is illustrated in Fig. 5. P and p are pistons working in the cyl-

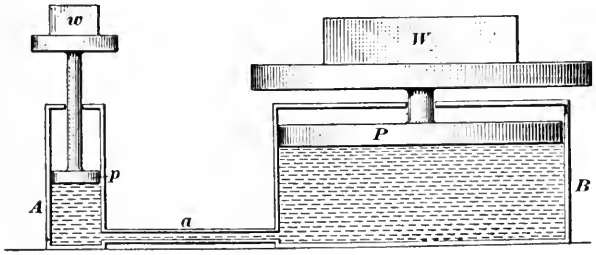

Fig. 5.

inders A and B. P carries a weight represented by W, and the force pushing p down is represented by the weight w. The space

beneath the pistons is filled with water, oil, or other liquid, and the two cylinders are connected by a pipe a, so that the liquid can flow freely from one cylinder to the other. As p moves down the liquid in A flows through a into B, causing P to rise and with it the weight W. The specific pressure exerted by p is transmitted to P. Let d = diameter of p and D = diameter of P; then $.7854\,d^2$ = area of p and $.7854\,D^2$ = area of P, and the specific pressure exerted by w is $\frac{w}{.7854d^2}$. But this must be the same as the specific pressure exerted on W, which must be $\frac{W}{.7854D^2}$ therefore, $\frac{w}{.7854d^2} = \frac{W}{.7854D^2}$, or $\frac{w}{d^2} = \frac{W}{D^2}$; from which

$$W = \frac{wD^2}{d^2}.$$

That is, the weight that can be lifted (or the pressure that can be exerted) by the large piston is equal to the product of the weight (or force exerted) on the small piston and the square of the diameter of the large piston divided by the square of the diameter of the small piston.

EXAMPLE.—If the diameter of the small piston in Fig. 5 is 1½ in., of the large piston 12 in., and the force exerted on the small piston is 38 lb., what weight W can be raised by the large piston?

SOLUTION.—Substituting in the above formula the values given,

$$W = \frac{38 \times 12^2}{1.5^2} = 2432 \text{ pounds.} \quad Ans.$$

45. Attention is called to the fact that the work done on the small piston is (neglecting friction and other hurtful resistances) exactly the same as the work done on the large piston. Let h = the distance (height) passed through by the small piston and H = the distance passed through by the large piston; then $wh = WH$, from which $H = \frac{wh}{W}$. If, in the example just given, w moves 2 in., W will move only $\frac{38 \times 2}{2432} = .03125$ in. In other words, *what is gained in pressure or lifting force is lost in speed.* This is a general law, and is true of any machine. The converse is equally true; that is, if there is a gain in speed, there is a loss in the force that can be applied. For example, suppose that, referring to Fig. 5, it were desired to move the small piston upward 6 in. while the large piston was moving downward ½ in.; if the force W exerted on the large piston is 4000 pounds, what pres-

sure will be exerted on the small piston? Since $wh = WH$, $w \times 6 = 4000 \times .5 = 2000$, and $w = \frac{2000}{6} = 333\frac{1}{3}$ pounds. In other words, a force of 4000 pounds moving $\frac{1}{2}$ inch can raise a weight of only $333\frac{1}{3}$ pounds through a height of 6 inches, and what is gained in speed (distance) is lost in applied force.

46. The conclusion arrived at in the last article may also be verified as follows: Taking the dimensions of the example in Art. **44,** when the small piston moves down, it forces an amount of liquid into the cylinder B that is equal to the area of the small piston multiplied by the distance through which it moves; that is, it is equal to the volume of a cylinder whose diameter is the same as that of the piston and whose altitude is equal to the distance that the piston moves. The volume of the liquid under the large piston is increased the same amount, and is equivalent to a cylinder whose diameter is that of the large piston and whose altitude is the distance the piston is raised, or H. Consequently, assuming that piston p moves 2 inches, $.7854 \times 1.5^2 \times 2 = .7854 \times 12^2 \times H$, or $H = \frac{1.5^2 \times 2}{12^2} = \frac{5}{160}$ in. $= .03125$ in., and what is gained in applied force is lost in speed. Observe that this result is exactly the same as that obtained in Art. **45.**

47. Pressure of Liquid Due to its Own Weight.—In what has preceded, only the effects produced by the application of an external pressure have been considered. Since liquids have weight, they exert pressure on the vessels containing them, and the methods of determining this pressure will now be considered. Referring to Fig. 2, suppose the piston and its weight of 480 pounds to be removed; the total pressure on the bottom of the cylinder will then evidently equal the weight of the liquid, and the specific pressure on the bottom will equal the weight of the liquid divided by the area of the bottom, and will be transmitted downward, upward, and laterally. This specific pressure will not, however, be the same for all parts of the liquid, since the pressure on the top of the liquid will be 0. At any point between the top of the liquid and the bottom of the vessel, the pressure will be equal to the weight of the liquid corresponding to the depth of the point below the top of the liquid. Insofar as the downward pressure is concerned, the case is exactly analogous to a pile of bricks, see Fig. 6. The pressure on the surface AB that supports the bricks is equal to the weight of all the

bricks, or 7 bricks in this instance. There are 6 bricks on top of brick No. 1, and the pressure on the top of this brick is equal to the weight of 6 bricks, the depth of the pile between brick 1 and the top of brick 7. The pressure on top of brick 4 is 3 bricks, the number of bricks between the top of brick 4 and the top of brick 7; etc.

Suppose the size of the bricks to be 4 in. wide, 8 in. long, and 2 in. thick, and that each brick weighs 4.5 pounds. The total pressure on the surface AB is $7 \times 4.5 = 31.5$ pounds, and the specific pressure is $31.5 \div 4 \times 8 = .984375$ pound per square inch. The weight of 1 cubic inch of brick is $4.5 \div (4 \times 8 \times 2) = .0703125$ pound. The depth of the pile is $7 \times 2 = 14$ in., and $.0703125 \times 14 = .984375$ pound = the weight of a prism of brick 1 in. square and 14 in. high. But this value is the same as the specific pressure; hence, the specific pressure for any depth is equal to the weight of a prism of the brick whose base is the unit of area and whose height is the depth of the brick at the point considered. This also applies to fluids.

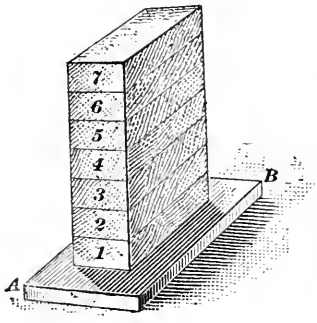

FIG. 6.

48. A cube of water measuring 1 ft. on each edge (1 cubic foot) weighs 62.4 lb. at its temperature of maximum density (4°C. or 39.2°F.); it weighs less at higher temperatures, but unless very exact results are desired, the weight of water may be taken as 62.4 pounds per cu. ft. A column of water 1 in. square and 1 ft. high evidently weighs $62.4 \div 144 = \frac{624}{1440} = .4\frac{1}{3}$ pound. Therefore, for water at any depth, let p = the specific pressure and h = the depth in feet; then,

$$p = .4\tfrac{1}{3}h = \tfrac{13}{30}h \qquad (1)$$

If the depth be taken in inches, the weight of 1 cu. in. $= 62.4 \div 1728 = \frac{624}{17280} = .036111$ pound, say .0361 pound for practical purposes. Letting h' be the depth in inches, the specific pressure is

$$p = \tfrac{13}{360}h' = .0361h' \qquad (2)$$

If it be desired to find the depth necessary to produce a given specific pressure, solve the above formulas for h and h', obtaining

$$h = \tfrac{30}{13}p = 2.3077p \qquad (3)$$

and

$$h' = \tfrac{360}{13}p = 27.692p \qquad (4)$$

For practical purposes, a depth of 2.31 ft. or 27.7 in. of water may be considered as equivalent to a pressure of 1 lb. per sq. in.

49. Pressure Due to Liquid on Submerged Surface.—In Fig. 7, let *abcd* be a flat plate submerged in the water contained in the tank *T*. It is evident that the pressure (specific) at the edge *ab* is less than it is at the edge *dc*. Let *f* be the center of gravity of the plate; then the specific pressure at *f* will be the same at any point along a horizontal line drawn on the plate and passing through *f*, because every point on such a line will be at the same depth below the level of the liquid. Further, this specific pressure will be the *average* pressure on the plate, and when multiplied by the area of the plate, the product will be the total normal pressure *P* on the plate. Let *h* = the depth of *f* below the surface of the liquid, *a* = area of plate, and *P* = the total normal pressure on the plate; then,

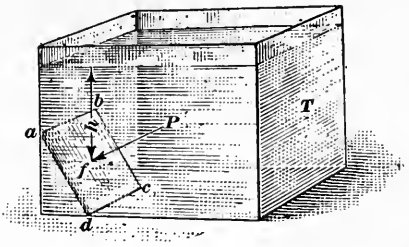

Fig. 7.

$$P = ahw \qquad (1)$$

in which *w* is the specific weight (weight of a unit cube) of the liquid. In this formula, if *h* is in feet and *a* is in square feet, *w* is the weight of a cubic foot; hence, for water

$$P = 62.4ah \qquad (2)$$

If *h* is in feet, *a* in square inches, and *w* = weight of 1 cu. ft.

$$P = \frac{ahw}{144} \qquad (3)$$

and for water,

$$P = .4\tfrac{1}{3}ah = \tfrac{1}{3}\tfrac{2}{0}ah \qquad (4)$$

For a curved surface, *a* must be equal to the projection of the surface on a plane perpendicular to the normal through the center of gravity.

Rule.—*The total normal pressure upon any submerged surface due to the weight of the liquid is equal to the weight of a prism of the liquid whose base is equal to the projection of the surface on a plane perpendicular to the normal at the center of gravity of the surface and whose altitude is the depth of this center of gravity below the surface of the liquid.*

50. From the foregoing, it will be evident that the pressure on the bottom of a vessel has nothing to do with the shape of the vessel that contains the liquid. Thus, referring to Fig. 8, if the areas of the bottoms *ab* of the four vessels shown is the same, and the depth of the water is the same in all the vessels, the pressure (total pressure) on the *bottoms* of all the vessels will be the same, since their centers of gravity are at the same depth below the

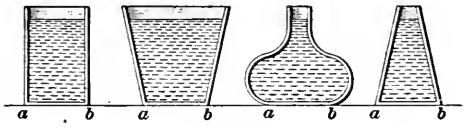

FIG. 8.

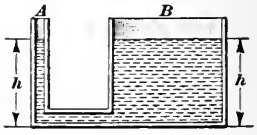

FIG. 9.

surface of the liquid. Further, if all the vessels stand on a common flat, level surface, and the height of the liquid in each is the same, then if all are filled with the same liquid and are connected together by a pipe, the level of the liquid will still be at the same distance above the bases. This fact is strikingly shown in Fig. 9, where the vessel *B* has a much larger cross-section than *A*. If water, for example, be poured into *A* (or *B*), it will flow into *B* (*A*) through the connecting pipe, and when the pouring is stopped, it will be found that the water is at the same level in both vessels. This phenomenon is expressed in the familiar

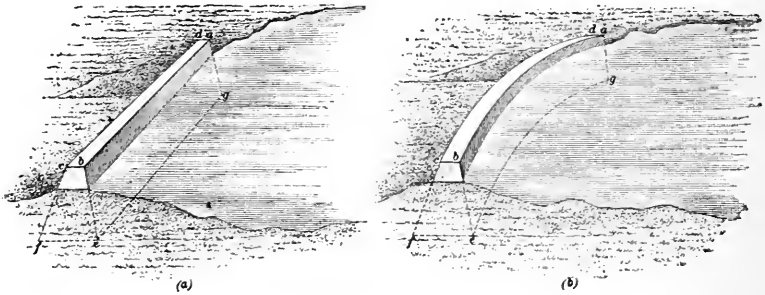

FIG. 10.

saying "Water seeks its level." If the water level were not the same in both vessels, there would be a greater specific pressure on the bottom and at the entrance to the pipe in one vessel than in the other, and the water would flow from the place of higher pressure than to that of the lower.

51. It is to be again emphasized that the total normal pressure on any submerged surface does not depend upon the shape of the

vessel that contains the liquid. Referring to (*a*), Fig. 10, suppose *dcbagef* to be a dam, the top and bottom having the shape of a rectangle. Then the total normal pressure on the inside face of the dam depends only on the projected area of that face and the depth of the center of gravity of the face below the surface of the liquid, which is assumed to be level with the top of the dam; and it makes no difference how far back the water may extend. It also makes no difference what shape of the cross-section of the dam may be, provided the projected area is the same; that is, the dam may be straight, as in (*a*), or curved, as in (*b*).

52. Combined Pressures.—If the upper surface of a liquid is free, the pressure at any point in the liquid is that due to the depth of the water (liquid) at that point; but if the liquid is subjected to an external pressure, the total specific pressure at any point is equal to the sum of the specific pressure due to the depth of the point below the surface of the liquid and the specific pressure due to the external pressure.

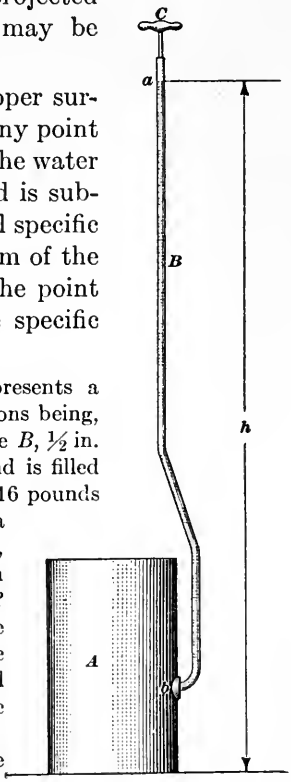

Fig. 11.

Example.—Referring to Fig. 11, *A* represents a cylinder filled with water, the inside dimensions being, say, 18 in. diameter and 30 inches long. A pipe *B*, ½ in. in diameter is connected to the cylinder at *b* and is filled to the point *a* with water. If a pressure of 16 pounds be applied to the handle *C*, thus pushing on a piston touching the water in the pipe at *a*, what will be the total pressure on the bottom of the cylinder? on the top of the cylinder? the lateral specific pressure at *b*? Let the vertical distance *h* between the top of the water in the tube and the bottom of the vessel be 8 ft., and between *b* and the bottom of the vessel 12 inches.

Solution.—The specific pressure on the bottom of the vessel due to the water in the cylinder and pipe is, by formula (2), Art. **48**, since 8 ft. = 96 in., $p = \frac{13}{300} \times 96 = 3.4667$ lb. per sq. in.

The specific pressure on the water at *any* point in the cylinder due to the push on the handle is equal to the pressure on the piston divided by the area of the piston, or $\frac{16}{.7854 \times .5^2} = 81.487$ lb. per sq. in. The total specific pressure on the bottom is $81.487 + 3.467 = 84.954$ lb. per sq. in., and total pressure on bottom is $.7854 \times 18^2 \times 84.954 = 21{,}618$ lb. *Ans.*

The specific pressure on the top due to the water in the pipe is $p = \frac{18}{300}$

$\times(96 - 30) = 2.383$ lb. per sq. in., and the total specific pressure on the top is $81.487 + 2.383 = 83.87$ lb. per sq. in. The total pressure on the top is $.7854 \times 18^2 \times 83.87 = 21{,}342$ lb. *Ans.*

The lateral specific pressure at b is $\frac{3}{5}\frac{6}{6}(96 - 12) = 3.033$ lb. per sq. in. due to the water only. The total specific pressure at b is $81.487 + 3.033 = 84.52$ lb. per sq. in. *Ans.*

Observe that the specific pressure due to the push on the handle is transmitted undiminished in all directions within the cylinder, while that due only to the water depends on the depth of the point considered below the level a.

EXAMPLES

(1) Referring to Fig. 2, suppose the weight on top of the piston is 1200 pounds, the diameter of the piston is 21 in., and the depth of the water under the piston is 40 in., what is (*a*) the total pressure on the bottom of the cylinder? (*b*) on the bottom of the piston? (*c*) the specific pressure due to the weight.

Ans. { (*a*) 1700.3 lb. (*c*) 1200 lb. (*c*) 3.4646—lb. per sq. in.

(2) Referring to the preceding example, what is the force (total normal pressure) tending to separate one half of the cylinder from the other half?

Ans. 3516.9 lb.

(3) In Fig. 9, suppose that the diameter of A is 1.72 in. and of B 9.8 in. If a piston weighing 12 lb. rests on top of the water in B and a force of 24 lb. (including weight of small piston) is applied to a piston on top of the water in A, what force (weight) must be applied to the piston in B to keep it stationary? *Ans.* 767.12 lb.

Suggestion.—The weight of the piston in B must be subtracted from the upward pressure of the water to find the total downward force required to balance the pressure on piston in A.

(4) Neglecting the weight of the water in the last example, how far will the piston in B move when the piston in A moves $3\frac{1}{4}$ in.?

Ans. 0.1 in. very nearly.

(5) Referring to Fig. 7, suppose *abcd* to be a flat rectangular plate $8\frac{1}{2}$ in. by 11 in., and that its center of gravity is 43 in. below the water level; what is the total normal pressure on the plate? *Ans.* 145.18 lb.

(6) Referring to the example of Art. **52**, what will be the total upward pressure against the top of the cylinder, if the diameter of the pipe B is 2 in., the other dimensions and the pressure on the handle C being the same as before? *Ans.* 329,831 lb.

(7) The total difference of level between the top of the water in a reservoir and the nozzle of a fire hose is 225 ft.; what is the pressure of the water at the nozzle when the water is not flowing? *Ans.* 97.5 lb. per sq. in.

(8) A certain reservoir has a uniform cross-section shaped like the second illustration in Fig. 8. The bottom is a rectangle 144 ft. by 350 ft.; what is the total pressure on the bottom when the depth of the water is 75 ft., assuming that the bottom is level?

Ans. 235,872,000 lb. = 117,936 tons.

BUOYANCY AND SPECIFIC GRAVITY

BUOYANCY

53. Conditions under which Bodies Float or Sink.—All bodies have a tendency to float; let us consider the reason. Referring to Fig. 12, *ABCDEFG* represents a tank filled with a liquid in which two bodies *M* and *N* are immersed. *M* is a prism, its bases being parallel to the upper (flat) surface of the liquid. The downward pressure on the body *M* is equal to the weight of a prism of the liquid whose volume is *a'b'c'd'abcd*; the upward pressure is the weight of a prism of the liquid whose volume is indicated by *a'b'c'd'efg*; the difference of these volumes is the volume of the prism; and the difference between the downward and upward pressures is equal to the weight of a prism of

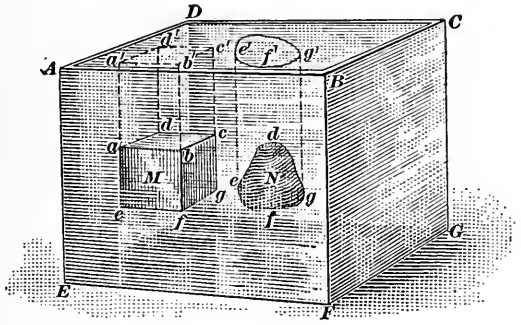

Fig. 12.

the fluid having the same volume as the prism *M*. In other words, *the difference between the downward and upward pressures is equal to the weight of the liquid displaced by the body*, and this statement is true *whatever the shape of the body*. For instance, let *N* be an irregular body, say a stone; let *e'f'g'* be the projection of the stone on the upper surface of the liquid; then the downward pressure is equal to the weight of a column of the liquid having the shape *e'f'g'edg*; the upward pressure is the weight of a column of the liquid having the shape *e'f'g'efg*; and the difference between these pressures is the weight of a body of fluid having the same shape as the stone. Further, it makes no difference how far below the surface of the liquid the body lies, the weight of a body of liquid having the shape of the submerged body will be the pressure tending to force the body upward.

Since gravity tends to pull the body down and the difference between the downward and upward pressures tends to push it up, the force urging the body down through the liquid is equal to the weight of the body minus the weight of an equal volume of the liquid. If, therefore, the density of the body is the same as that of the liquid, the body will stay in any position in the liquid and at any depth that it may be placed, assuming the density of the liquid to be uniform. If the density of the body is less than that of the liquid, the body will float, that is, only a part of it will be submerged, the weight of a volume of liquid equal to the submerged part being equal to the weight of the body. If the density of the body is greater than that of the submerged part, the body will sink, that is, it will fall through the liquid until it touches bottom.

As an illustration of the statements in the last paragraph, place an egg in a can of water; the egg will sink, showing that its density is greater than water. Now, leaving the egg in the water, dissolve in it some salt (or sugar), stirring the water so it will be equally dense throughout. The salt being denser than the water, the density of the water will gradually increase until it becomes the same as that of the egg, and when this point is reached, the egg will stay in any position in the water and at any depth. As more salt is added and dissolved, the water becomes denser than the egg, and the egg will rise and float, a part of it extending out of the water.

54. The tendency of any body to float when immersed in a fluid is called **buoyancy,** and the denser the body the less buoyant it is. What is true in this respect of a liquid is equally true of a gas, the upward or buoyant force being equal to the weight of a body of gas having the same volume as the submerged body. In the case of a balloon, the gas (hydrogen) with which it is filled is very much lighter than air, a cubic foot of air weighing about 14.5 times as much as hydrogen. Assuming that a cubic foot of air weighs .08 pound under certain conditions, 100,000 cubic feet will weigh 8000 pounds, and 100,000 cubic feet of hydrogen under the same conditions will weigh $8000 \div 14.5 = 552 -$ pounds. The difference is $8000 - 552 = 7448$ pounds, which is the buoyant effect, or force urging the balloon upward. The total upward force is 8000 pounds, but this is counteracted by the weight of the hydrogen, the weight of the balloon, and the load lifted. As the balloon moves up, the air becomes less and less dense, and a point

will be reached where the balloon can ascend no higher, remaining stationary (in still air) unless some of the hydrogen be allowed to escape, when the balloon will descend; or, if the balloon carries ballast and this be thrown out, the balloon will rise higher.

Mercury, which is a liquid at ordinary temperatures, is so dense that iron, copper, lead, etc. will float in it; but gold, platinum, tungsten, etc. will sink in it, because their densities are greater than the density of mercury.

55. Weight in a Vacuum.—A **vacuum** is a closed space from which all air or other gas has been removed; the inside of a carbon filament lamp is a good example of a vacuum. The air must be removed, since it would otherwise unite with the carbon (when heated) and the filament would be destroyed. A little consideration will show that a body will weigh more in a vacuum than in air, because the buoyant effect of the air counteracts by just that much the force of gravity. For example, if a cubic foot of water weighs 62.4 pounds in air when the air weighs .08 lb. per cu. ft., a cubic foot of water will weigh 62.4 + .08 = 62.48 pounds in a vacuum. The weight in a vacuum is therefore the true weight of a body. However, in all practical and commercial transactions, the weight of a body in air is the weight that is used; it is only in accurate scientific calculations that weights are expressed as the true weights in a vacuum.

SPECIFIC GRAVITY

56. Definition.—The **specific gravity** of a body is the ratio of the weight of the body to the weight of an equal volume of water. Thus, the weight of a cubic foot of cast iron is commonly taken as 450 pounds, and (when finding the specific gravity) the weight of a cubic foot of water is 62.4 pounds; hence, the specific gravity of cast iron is $\frac{450}{62.4} = 7.21$. In other words, cast iron weighs 7.21 times as much as an equal volume of water at its temperature of maximum density. When 62.4 pounds is used as the weight of a cubic foot of water in finding the specific gravity, it is useless to find the value of the ratio to more than three significant figures.

The specific gravity of water is evidently 1, since $\frac{62.4}{62.4} = 1$. Consequently, if the specific gravity of a body is greater than 1,

the density of the body is greater than the density of water, and the body will sink in water; but if the specific gravity is less than 1, the density of the body is less than that of water, and the body will float in water.

57. Let s = the specific gravity of a body, W = its weight, and w = weight of an equal volume of water; then,

$$s = \frac{W}{w} \qquad (1)$$

$$W = ws \qquad (2)$$

The specific gravity of most materials and substances can be obtained from printed tables; hence, if the volume and specific gravity of any body or substance is known, its weight can readily be found. For, the weight of an equal volume of water is 62.4 V, where V is the volume in cubic feet, and this equals w in formula (2); therefore, substituting in formula (2),

$$W = 62.4\ Vs \qquad (3)$$

If v = the volume in cubic inches, 1 cu. in. of water weighs $\frac{13}{360}$ pounds (see Art. **48**), and

$$W = \frac{13vs}{360} \qquad (4)$$

EXAMPLE.—Taking the specific gravity of silver as 10.53, what is the weight of 8.65 cu. in.?

SOLUTION.—Applying formula (4), $v = 8.65$ and $s = 10.53$; hence,

$$W = \frac{13 \times 8.65 \times 10.53}{360} = 3.289 \text{ lb.} \quad Ans.$$

58. When using the metric system of weights and measures in connection with specific gravity problems, the cubic decimeter is taken as the standard of volume. Since 1 cubic decimeter = 1 liter, and since, by definition, 1 kilogram is the weight of 1 liter of water, then letting W = the weight of one cubic decimeter of the substance, formula (1) of the last article becomes $s = \frac{W}{1}$ = W; that is, the specific gravity of any substance is numerically equal to the weight in kilograms of 1 cubic decimeter of the substance. As an illustration, the weight of 1 cubic foot of cast iron is 450 pounds; since 1 kg. = 2.2046 pounds and 1 cu. dm. = 61.024 cu. in., 1 cu. dm. of cast iron weighs $\frac{450 \times 61.024}{1728 \times 2.2046}$ = 7.21+ kg. The value previously found for the specific gravity of cast iron was 7.21; hence, the numerical values 7.21 agree.

To find the specific gravity of a liquid, all that is necessary is to fill a liter measure, weigh it, and then subtract the weight of the measuring vessel; the result expressed in kilograms will be the numerical value of the specific gravity of the liquid.

To find the specific gravity of a solid, it would be quite difficult to form it into the shape of a cube measuring 1 cu. ft. or 1 cu. dm. on each edge; in fact, in many cases it would be impossible. Consequently, the usual method is to immerse the object in water and note the loss in weight. This loss in weight is evidently equal to the weight of a volume of water equal to the volume of the solid, the value of W in formula (1), Art. **57**. Let W = the weight in air and W' = the weight in water; then

$$s = \frac{W}{W - W'}$$

For example, suppose a certain small object weighs 367 grains in air and 310 grains in water; its specific gravity is $s = \frac{367}{367 - 310} = 6.44-$.

59. Distinction between Density and Specific Gravity.— Density may be defined as specific mass or as specific weight, according to which of the two definitions of Art. **30** is used. The word *specific*, as used in physics, always implies a reference to some standard. Thus, specific weight means the weight of a unit of volume (1 cu. ft., 1 cu. dm., etc.), specific pressure is the pressure per unit of area (1 sq. ft., 1 sq. cm., etc.), specific volume is the volume of a unit of weight (1 lb., 1 kg., etc.). If, therefore, density be defined as the weight of a unit of volume and the unit of volume be taken as 1 cu. dm. = 1 liter, the numerical values of the density and specific gravity of any body will be equal; in fact, many writers on scientific subjects use these two terms interchangeably. They do not, however, mean exactly the same thing, since density means specific weight (or specific mass), while specific gravity means the number of times heavier a substance is than an equal volume of water. To prevent any ambiguity, the first definition of density, according to which $D = \frac{m}{V} = \frac{W}{gV}$, will be used hereafter, except for gases.

60. Specific Gravity of Gases.—Gases are so much lighter than equal volumes of liquids and solids that is customary to express their specific gravities as the ratio of the weight of any volume of gas to the weight of an equal volume of air. The

weight of any gas depends not only on its volume but also on its temperature and pressure. The weight of a cubic foot of air at 32° F. (0° C.) when its pressure is 14.695 pounds per sq. in. is .08071 pound. (This combination of pressure and temperature is called **standard conditions.**) Hence, if the specific gravity of nitrogen be given in a certain table as .970, the weight of a cubic foot at 32° F. and a pressure of 14.695 lb. per sq. in. is .08071 × .970 = .07829 pound. Properties of gases will be considered later.

HYDROMETERS

61. Definition.—A **hydrometer** is an instrument by means of which the specific gravity of a liquid may be found; they are made in many forms and are called by various names, but they all depend for their action on the fact that if a body lighter than the liquid in which it is placed sink to a certain mark on the body, it will sink farther in a lighter liquid (one less dense) and not so far in a heavier liquid (one of greater density). Fig. 13 shows two forms of the instrument, the one at (*a*) being for liquids lighter than water and the one at (*b*) for liquids heavier than water. As will be seen, they consist of glass tubes closed at both ends and containing a graduated scale. One end is loaded with mercury or shot to make the instrument stand upright when placed in the liquid. The enlarged part above the loaded end increases the buoyancy. The instrument shown at (*a*) has a narrow stem, increasing its sensitiveness, and adapting it to liquids heavier than water; the one shown at (*b*) has a wide stem, and is for use in liquids lighter than water.

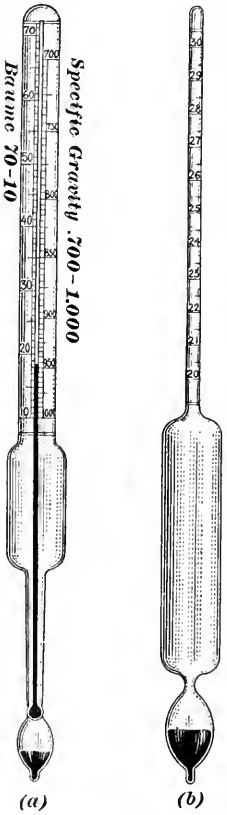

FIG. 13.

The density of water and other liquids usually decreases as the temperature increases; for this reason it is necessary to have a standard temperature for the graduation of the hydrometer and for the liquid when the hydro-

meter is placed in it: this temperature is generally 15° C. or 60° F. C. and F. mean centigrade and Fahrenheit respectively, and will be explained later. Although 15° C. really equals 59° F., the difference between 59° and 60° is so slight that it may usually be neglected.

62. The Graduations on the Scales.—The main graduations on any hydrometer scale are called **degrees,** and these are frequently subdivided into tenths of a degree. Some instruments are so divided that they give the specific gravity while in others, if the specific gravity be desired, it must be calculated from the scale reading. The scale most commonly used in the United States and Canada is the **Beaumé;** and while there are several formulas for calculating the Beaumé scale, the so-called *American Beaumé* is the only one that will be considered here. Any reference to the Beaumé scale in this course will be understood to be the American Beaumé at 60° F.

Let s = the specific gravity of the liquid to be tested at 60° F., and let B = the reading of the scale in degrees Beaumé; then for liquids lighter than water,

$$s = \frac{140}{130 + B} \qquad (1)$$

For liquids heavier than water,

$$s = \frac{145}{145 - B} \qquad (2)$$

For liquids lighter than water, the scale evidently begins at 10, since by formula (1) $s = \frac{140}{130 + 10} = 1$ = the specific gravity of water. And for liquids heavier than water, the scale begins at 0, since by formula (2), $s = \frac{145}{145 - 0} = 1$.

To use the instrument, partly fill a glass container, of such depth that the hydrometer will not touch bottom, with the liquid to be tested, first being sure that its temperature is 60°, then gently insert the hydrometer, and when it comes to rest in an upright position, note where the upper surface of the liquid crosses the scale; this will be the reading in degrees Beaumé. If the specific gravity is desired (which is not usually the case, the reading in degrees Beaumé being generally sufficient), calculate it by substituting the reading for B in formula (1) or (2).

If it be desired to convert specific gravity into degrees Beaumé,

simply solve the above formulas for B, obtaining for liquids lighter than water,

$$B = \frac{140 - 130s}{s} \qquad (3)$$

and for liquids heavier than water,

$$B = \frac{145(s - 1)}{s} \qquad (4)$$

EXAMPLE 1.—Suppose a certain liquid that is known to be heavier than water has a density of 18.4° Beaumé; what is its specific gravity?

SOLUTION.—Substituting 18.4 for B in formula (2),

$$s = \frac{145}{145 - 18.4} = 1.1453. \quad Ans.$$

EXAMPLE 2.—Knowing that the specific gravity of a certain liquid is .886, what is the density in degrees Beaumé?

SOLUTION.—Since the specific gravity is less than 1, use formula (3), and

$$B = \frac{140 - 130 \times .886}{.886} = 28° \text{ Beaumé}. \quad Ans.$$

63. Object of Hydrometer.—The reason for using the hydrometer to get the comparative densities of liquids is that materials bought and sold in liquid form (mixtures of several different materials) do not contain a constant percentage of some particular substance for which the liquid was bought. As a simple illustration, consider a mixture of common salt and water; the greater the percentage of salt in the solution the greater the density of the solution. In a solution of salt and water, if the density of the solution or its specific gravity be known, then by means of a special formula or table, the percentage of salt can be found. This same method can be used to find the percentage of other substances in solution. In many pulp and paper mills, the hydrometer is used for taking the strength of the bleach liquor; if the bleach is of poor quality, that is if it contains soluble impurities, as calcium chloride, which remains over when the bleach powder decomposes, misleading results will be obtained with the hydrometer, because the calcium chloride increases the density just as the bleach itself does. Consequently, before dependence can be placed on the results obtained with the aid of the hydrometer, one must be sure that the solution itself is pure.

EXAMPLES

(1) A liter of hydrogen under standard conditions weighs .089873 gram, a liter of air weighs 1.2929 gram; (*a*) what is the specific gravity of hydrogen? how many liters of hydrogen equal the weight of 1 liter of air?

Ans. { (*a*) .069514
(*b*) 14.389

(2) A flask holding 50 c.c. (cubic centimeters) is filled with a liquid and weighed; after deducting the weight of the flask, the weight of the liquid is found to be 64.6 g. (grams); (*a*) what is the specific gravity of the liquid? (*b*) what is its relative density in degrees Beaumé?

Ans. { (*a*) 1.292 (*b*) 32.77° Be.

(3) What is the weight of a cold drawn steel rod 2¼ in. in diameter and 13 ft. long, the specific gravity of the steel being 7.83? *Ans.* 175.4 lb.

(4) The specific gravity of oxygen is 1.1053; what is the weight of 468 cubic feet under standard conditions? *Ans.* 37.77 lb.

(5) Suppose a liquid that is lighter than water has a relative density of 42° Beaumé; what is its specific gravity? *Ans.* .814.

(6) The relative density of a certain liquid that is lighter than water is 17.4°Beaumé; what is the weight of 50 c.c.? *Ans.* 47.5 g.

CAPILLARITY

64. Capillary Attraction.—The word *capillary* means hair-like, and as used in physics, it refers to small or fine tube-like holes and channels. If a clean glass rod be placed in a vessel of water, as shown in (*a*), Fig. 14, it will be found that the surface of the water around the rod is not level, but curved, the water being drawn up about the rod, and the part touching the rod will be higher than the water level as at *a* and *b*. If, instead of a glass rod, a glass tube be used, the water in the tube will be higher than the water level outside (as at *c* in Fig. 16); the shape of the upper surface of the water in the tube will also be curved, the outer edge being higher than the center. It will also be found that the smaller the diameter of the hole the higher the water will rise in the tube. This phenomenon is called **capillary attraction,** and the results noted are caused by the adhesion of the water to the tube and the cohesion of the water particles. Fibers used in making paper are really fine tubes and consequently behave similarly.

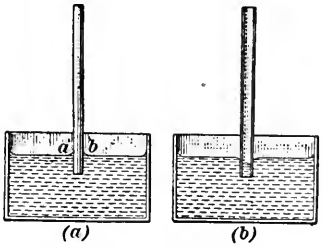

Fig. 14.

If the glass tube be covered inside and out with a thin coating of grease, an exactly opposite effect will be obtained; the water will be depressed inside and outside of the tube, as shown at (*b*), Fig. 14, and the curves will be reversed. This latter effect will also be observed if a clean glass tube be inserted in mercury.

It will be found on examination, that in the first case, the liquid *wet* the tube and in the second case, it did not wet the tube. In general, capillary attraction draws the liquid up when the liquid wets the surface and pushes it down when the liquid does not wet the surface. A striking illustration may be obtained by means of two flat panes of glass, partly immersed in a vessel of water, as shown in Fig. 15. Bringing two of the ends together and separating the other two ends slightly, as shown, the water will be found to rise in a curve, the highest point being at the ends that touch.

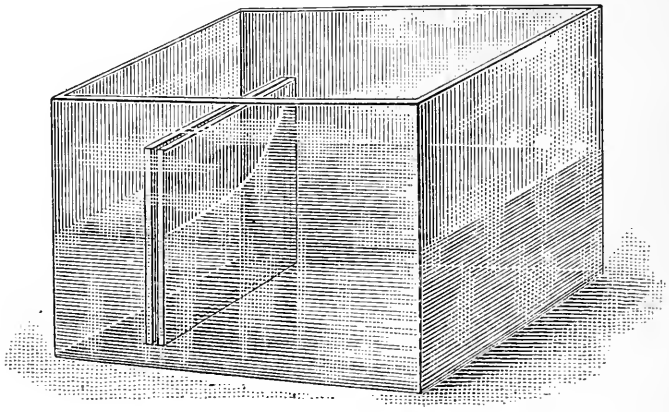

Fig. 15.

If one end of a lump of sugar be touched to and held in contact with the surface of a liquid, as water, milk, etc., the entire lump will soon become wet, the liquid being raised through the pores by capillary attraction. When a candle burns, the wax or tallow is melted (changed to a liquid) and capillary attraction draws the melted wax or tallow up through the *wick* to the flame. If there were no wick, the candle would not burn in the regular manner.

65. The vertical height through which a liquid will be raised by capillary attraction above the true level of the liquid varies inversely as the diameter of the tube, for the same liquid. Thus, water will rise higher than alcohol, but for the same liquid in two tubes A and B, if A is twice as large as B, the liquid will rise only one-half as far in A as in B; if the diameter of A is .03 in. and of B .01 in., the liquid will rise $.03 \div .01 = 3$ times as far in B as in A.

Capillary attraction need be considered only when the diameter of the tube is quite small. The curve formed by the top of the liquid is called the **meniscus,** and it is crescent or bow-shaped. The meniscus at *c*, Fig. 16, is said to be *concave upward,* and that in (*b*), Fig. 14, is said to be *convex upward.* The top of the meniscus, in either case, is the point where the axis of the tube intersects it. When reading the height of a column of fluid that has a meniscus, it is usual to take the top of the meniscus as the top of the column. This applies to thermometers, barometers, pipettes, burettes, etc.

An interesting example of capillary attraction is shown in Fig. 16. Here *A* and *B* are glass vessels connected at *D*. *C* is a small glass tube also connected to *D*. The diameters of *A* and *B* are such that the water level in each is the same, and is indicated by the line *ab*. The water level in *C*, however, is much higher, being indicated by *c*. The distance *cd* represents the vertical height that the water was raised by capillary attraction, and it does not in any way increase the hydrostatic pressure on the water in *A* and *B*, and it would evidently not be correct to measure the height of *c* in any calculation regarding the normal pressure at any point of the liquid in the vessels.

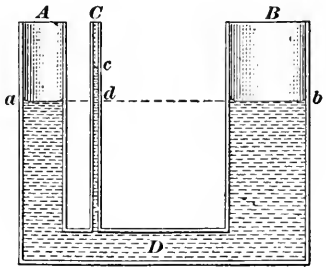

FIG. 16.

66. Some Examples of Capillary Action.—Capillary action plays a very important part in ordinary everyday affairs. Without capillary action, no plant could live, since capillary attraction is what draws the sap up from the ground. It is capillary attraction that enables a piece of blotting paper to absorb ink, that brings oil to the flame through the wick of a lamp, that causes wood to swell when placed in water. In coloring or sizing paper, capillary attraction helps by drawing solutions into the fibers. It can be made to exert an immense force. Thus, if a hemp rope be drawn tight and is then wet with water, it contracts, because the fibers run around in helixes (somewhat like a screw thread); as the capillary attraction draws up the water, the rope swells and the fibers shorten in a direction lengthwise of the rope the result being a tremendous pull.

PNEUMATICS

THERMOMETERS

67. Pneumatics is that branch of science that treats of the properties of air and gases; it might be called the hydrostatics of gases.

As was previously pointed out, all gases completely fill the vessels that contain them; it is also to be noted, that the density of a gas is uniform through its entire extent, that is, no matter what the shape of the container, a cubic inch, say, of the gas will have the same density regardless of what part of the vessel it is taken from. Theoretically, this last statement is not quite true, since a cubic inch taken from the top of a vessel will weigh a trifle less than that taken from the bottom, the column of gas having weight in the same manner that a column of water has weight; but, in practice, this may be neglected, and the density of a gas may be considered to be uniform throughout the container.

68. Tension.—The molecules of gases are in rapid vibration, and they are constantly trying to escape from the vessel that contains the gas; the result is that the gas exerts a pressure against the walls of the container in much the same manner that a helical spring exerts a pressure when a load is placed on it. The condition of the gas or spring that causes it to exert pressure is called **tension.** The force with which the spring presses against the load is equal to and measures its tension, and the pressure which gases exert against the walls of their containers also equals and measures their tension. Tension is measured in the same manner and in the same units as pressure, and the word pressure is frequently used instead of tension, since the tension must always equal the pressure.

69. Before the tension of any gas can be found, it is necessary, as will be more fully explained later, to know its temperature, because any increase or decrease in the temperature increases or decreases the tension, provided the volume of the gas does not change. Under ordinary conditions, temperatures of bodies are measured by instruments called **thermometers.**

70. Thermometer Scale.—All thermometers depend for their operation upon the fact that most substances expand when heated

and contract when cooled; if this variation in length, area, or volume can be measured, a thermometer can be constructed. The substance most generally used for this purpose is mercury. As usually constructed, a glass tube with a bulb at one end is partly filled with mercury; the air is then exhausted above the mercury and the other end of the tube is sealed. When the tube is heated, the mercury expands, and the column in the tube lengthens; and when the tube is cooled, the mercury contracts, and the column shortens. The hole in the tube is quite fine, so that a small expansion in the volume of the bulb will make a considerable increase in the length of the column.

In constructing a scale for a thermometer, it is assumed that the ice made from pure water always melts at the same temperature and that pure water always boils at the same temperature, when the pressure conditions are the same. The tube is therefore inserted in melting ice, and the height of the mercury column is marked on the scale. It is next inserted in boiling water, and the height of the mercury column is marked on the scale. It is now assumed that if the distance between these two points be divided into equal parts, each part will indicate an equal rise (or fall) in temperature. Experience has shown these assumptions to be correct.

There are two thermometer scales in general use—the **Fahrenheit scale** and the **centigrade** or **Celsius scale.** The former is in common use in English speaking countries, and the latter in all other countries (except Russia) and by scientists generally. In both scales, the principle divisions are called **degrees,** and these are subdivided into tenths, hundredths, etc., the degrees on the Fahrenheit scale being denoted by N°F. and those on the centigrade scale by N°C., N representing the number of degrees; thus, 59°F. and 15°C., represent 59 degrees Fahrenheit and 15 degrees centigrade, respectively.

71. When graduating a thermometer (thermometer means heat measurer) in accordance with the Fahrenheit scale, the point that indicates the temperature of melting ice is marked 32°, and the point that indicates the temperature of boiling water is marked 212°; the difference is $212° - 32° = 180°$, and the distance between these two points is divided into 180 equal parts, each of which is 1°F. These divisions are carried above and below the two fixed points, those below being numbered 29, 28, etc. until 0 is reached, which will be 32° below the melting

point of ice. All graduations below 0 are negative, and they increase numerically from 1 up; thus − 12°F. means 12 degrees below zero on the Fahrenheit scale.

The centigrade scale (sometimes called the Celsius scale) is graduated according to the same plan. The point indicating the temperature of melting ice is marked 0°; the point indicating the temperature of boiling water is marked 100°; and the distance between them is divided into 100 equal parts. Since this distance is the same on both scales, 1°C.: 1°F. = 180 : 100 from which it is seen that 1°C. = $\frac{180}{100} = \frac{9}{5}$F°; and 1°F. = $\frac{100}{180} = \frac{5}{9}$C°.

72. To convert degrees C. into degrees F., multiply the reading in degrees C. by $\frac{9}{5}$, and the result will be the number of F° above the temperature of melting ice; to find the temperature above 0°F., add 32° to the product. Expressed as a formula

$$\text{F.}^\circ = \text{C.}^\circ \times \tfrac{9}{5} + 32 \qquad (1)$$

To convert degrees F. into degrees C., subtract 32° from the reading and multiply the remainder by $\frac{5}{9}$; the product will be the degrees C. Expressed as a formula.

$$\text{C}^\circ. = (\text{F}^\circ. - 32^\circ) \times \tfrac{5}{9} \qquad (2)$$

EXAMPLE 1.—How many degrees F. are equivalent (*a*) to 15°C.? (*b*) to −20°C.?

SOLUTION.—(*a*) Applying formula (1), $15 \times \frac{9}{5} + 32 = 59$°F. *Ans.*

(*b*) Applying formula (1), $-20 \times \frac{9}{5} + 32 = -36 + 32 = -4$°F. *Ans.*

EXAMPLE 2.—(*a*) How many degrees C. are equal to 240°F.? (*b*) to − 22°F?

SOLUTION.—(*a*) Applying formula (2), $(240 - 32) \times \frac{5}{9} = 115\frac{5}{9}$°C. *Ans.*

(*b*) Applying formula (2), $(-22 - 32) \times \frac{5}{9} = -30$°C. *Ans.*

In both of the above examples, the numbers given are supposed to be thermometer readings.

THE ATMOSPHERE

73. Perfect and Imperfect Gases.—A perfect gas is one that remains a gas under all conditions of temperature and pressure; such a gas is also called a **permanent gas.** There is really no such thing as a perfect gas, since all gases have been liquefied at extremely low temperatures and under very high pressures. For practical purposes, however, hydrogen, nitrogen, oxygen, atmospheric air, etc. may be considered to be perfect gases. An imperfect gas or vapor is one that is readily liquefied under ordinary conditions; thus, steam, which is a vapor of water (and a gas) condenses when allowed to expand, and is, therefore,

an imperfect gas. In what follows, air will be taken as an example of a perfect gas, and the laws relating to air will apply to all other perfect gases.

74. The Atmosphere.—The earth is entirely surrounded by an invisible gaseous envelope called the **atmosphere,** and the mixture of gases composing the atmosphere is called **air.** The principal gases composing the air are nitrogen and oxygen; in addition to these, there is also a small percentage of carbon dioxide, water vapor, and minute quantities of several other gases. For practical purposes, the thickness of the gaseous envelope (depth of the atmosphere) is about 50 miles, but the actual depth may be several hundred miles. The density is greatest at the surface of the earth, but greater, of course, at the bottom of a deep well or shaft, and decreases as the distance above sea level increases.

75. The atmosphere exerts a pressure due to its weight on everything it touches; that this is the case can be shown in many ways, but most strikingly in the following manner: Take a glass tube that is about 40 inches long and closed at one end. Fill the tube with mercury, place the hand over the open end, and keeping it there, invert the tube; the mercury will be felt pressing against the hand. Still keeping the end of the tube covered, insert the hand and end of tube in a dish of mercury, and remove the hand. If the tube is vertical, it will be found that the distance between the top of the column and the top of the mercury in the dish is about 30 inches. See Fig. 17. This column of mercury is supported by the pressure of the atmosphere; because, the weight of the mercury exerts a pressure on the mercury in the dish that is transmitted in all directions, as in the case of any other fluid, and the upward pressure would raise the level of the liquid (mercury) in the dish were it not for the pressure of the atmosphere that just counterbalances it.

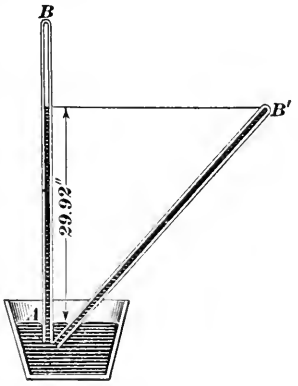

Fig. 17.

76. The space between the top of the mercury column and the closed end of the tube, which is the difference between the length

of the tube above the level of the mercury in the dish and the length (height) of the mercury column, is entirely empty, or in other words, a vacuum; this is called a **Torricellian vacuum,** after Torricelli (1608 – 1647), who first performed this experiment and first showed that the air had weight. If the pressure on the surface of the mercury in the dish be increased, the column of mercury in the tube will rise, and if the pressure be decreased, it will fall; this shows conclusively, that the column is supported by the pressure on top of the mercury in the dish. If the tube be inclined, as shown in Fig. 17, so that the vertical distance between the top of the tube and the level of the mercury in the dish is less, the mercury rises in the tube until it fills it when this vertical distance equals about 30 inches. The top of the mercury in AB and the top in the tube B' are then in the same horizontal line.

77. The specific gravity of mercury is 13.6 at 32°F., and the weight of 1 cu. in. = .49111 lb.; hence, a column of mercury 1 in. high exerts a pressure of .49111 lb. per sq. in. The height of the mercury column due to the atmospheric pressure varies considerably, being dependent on the altitude of the place above sea level, the temperature, the amount of water vapor contained in the air, etc., but the standard value is 760 millimeters at 0°C., at sea level; this corresponds to 29.9213 inches at 32°F. (= 0°C), at sea level. The pressure exerted by the atmosphere is therefore $29.9213 \times .49111 = 14.6946$ lb. per sq. in. $= 14.6946 \times 144 = 2116$ lb. per sq. ft. This pressure is called **1 atmosphere,** and whenever pressures are given in atmospheres, they can be changed into pounds per square inch by multiplying the number of atmospheres by 14.6946, which is usually expressed as 14.7. Since 1 lb. per sq. in. = 703.09456 Kg. per sq. m., 1 atmosphere is equal to $703.09456 \times 14.6946 = 10{,}332$ kilograms per square meter. Since the specific pressure of 1 atmosphere is 2116 lb. per sq. ft., this means that everything on the earth's surface is subjected to a pressure of over a ton on every square foot. The reason that we do not notice this enormous pressure is that the air within the body has practically the same tension as the pressure of the air outside, and one counteracts the other. It becomes very apparent, however, on top of a high mountain or when in a balloon or airplane at a great height from the earth; the tension of the air within the body is then greater than the pressure outside, and may result in the bursting of small blood vessels.

78. Partial Vacuum.—A **perfect vacuum** is a closed space that contains nothing that can exert a pressure on the walls that enclose the space. For practical purposes, the Torricellian vacuum mentioned in Art. **76** is a perfect vacuum; it is not actually so, because there is a very small amount of air present, probably held in suspension within the mercury, but the pressure it exerts is so small that it can hardly be detected. The space within a carbon-filament electric-light bulb is very nearly a perfect vacuum.

If, in Fig. 17, a connection be made between the top of tube B and a receptacle containing air (or other gas), and a little air be admitted above the mercury column, the pressure of this air will counterbalance a like weight of mercury; the column will then shorten by this amount. Thus, suppose the pressure of the air enclosed above the mercury is 2 lb. per sq. in.; this is equivalent to $2 \div .49111 = 4.0724$ inches of mercury, and the height of the mercury column will then be $29.9213 - 4.0724 = 25.8489$ in., say 25.85 in. The space above the mercury column is then called a **partial vacuum.** Partial vacuums are nearly always measured by the number of inches of mercury that will be sustained by the difference between the pressure within the partial vacuum and the pressure of the atmosphere. For instance, the partial vacuum just referred to would be called a vacuum of 25.85 inches. It may be remarked that vacuum gauges are graduated in inches of mercury and read from 0 to 30 inches.

79. For rough calculations, the weight of a cubic inch of mercury is taken as $\frac{1}{2}$ pound and the pressure of the atmosphere as 15 pounds per square inch; consequently, a vacuum of, say, 19 in. represents (roughly) a mercury column of $19 \times .5 = 19 \div 2 = 9.5$ lb., and the pressure within the partial vacuum is $15 - 9.5 = 5.5$ lb. per sq. in.

If exact results are desired, use the following formula in which m = inches of vacuum and p = pressure in pounds per square inch within the partial vacuum:

$$p = 14.6946 - .49111m$$

Applying this formula to the preceding case, $p = 14.6946 - .49111 \times 19 = 5.3635$ lb. per sq. in.

80. Examples of partial vacuums are very numerous. When soda water is sucked through a straw, the air in the mouth is drawn into the lungs, a partial vacuum is created in the mouth,

and the pressure of the atmosphere forces the fluid up through the straw. The common suction pump, the siphon, etc. all operate by reason of a partial vacuum. What are called vacuum pumps are used to exhaust air from the suction boxes underneath the wire of a paper machine, with the result that as the pulp on the wire passes, the water is forced through by the fact that the atmospheric pressure above it is greater than the pressure in the partial vacuum below it, and the water is said to be *sucked* through the wire.

81. Action of a Suction Pump.—The manner in which a suction pump acts will be clear after considering the diagrammatic

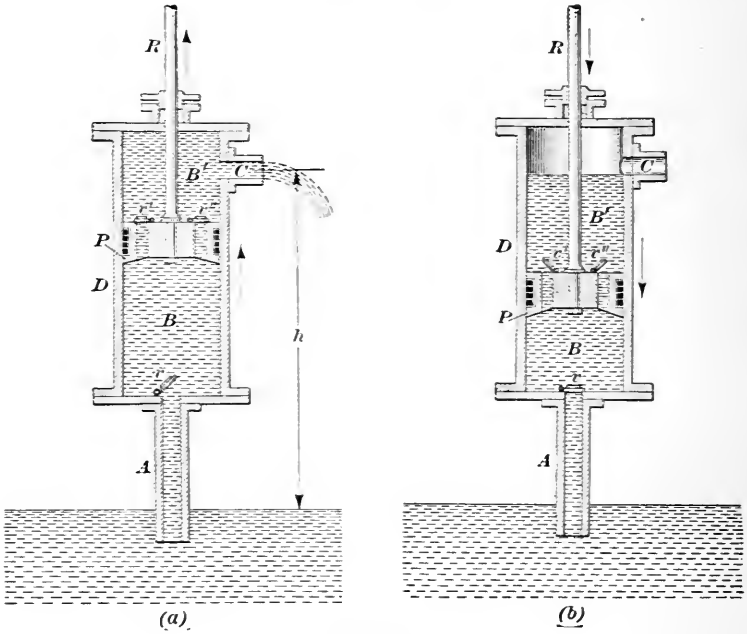

FIG. 18.

sections in Fig. 18. D is the pump barrel in which works a piston P, the piston being forced up and down by pushing and pulling on the piston rod R. The pipe A connects the pump barrel to the water supply, and where it joins the barrel is a valve v, which is lifted as shown when the water is entering the pump. The piston also has valves v' and v''. When the piston is moving upward, as shown at (a), it leaves a partial vacuum in the space

B below it; the atmospheric pressure on top of the open water causes the water to rise and fill this partial vacuum and follow the piston upward. When the piston stops, the water in B tends to fall downward, but the weight of the water acts as a pressure on top of the valve v and closes it, thus keeping the water in B. When the piston moves down, as shown in (b), valves v' and v'' lift, the water in B passes through the openings in the piston, permitting the piston to move down. When the piston again moves upward, the weight of the water above it closes the valves v' and v'', and the water in B' is lifted with the piston and discharged through C; at the same time, a partial vacuum is created in B, the atmospheric pressure forces the water up the pipe A, lifts valve v, and follows the piston, as before.

82. Height of Lift of a Suction Pump.—Theoretically, the maximum height of "suction" is equal to the height of a column of water that will just balance a perfect vacuum. In the case of mercury, this is 29.9213 in., and as the specific gravity of mercury is 13.6, the height of a water that will produce the same specific pressure is $29.9213 \times 13.6 = 406.93$ in. $= 33.91$ ft. Consequently, if the piston left a perfect vacuum behind it, and there were no friction or other resistances to the movement of the water, a suction pump would lift water about 34 ft. In practice, from 28 to 30 ft. is the greatest height that water can be raised with a suction pump. It might be thought that since the specific weight of hot water is considerably less than that of cold water, hot water could be raised to a greater height than cold water; such, however, is not the case, the reason being that hot water gives off vapor (steam), and the tension of this vapor creates a pressure that tends to destroy the vacuum. In fact, hot water cannot be raised to as great a height as cold water; the hotter the water the shorter the lift.

83. Work Required to Operate a Pump.—Since work is equal to force (pressure) multiplied by the distance through which it acts, the work required to operate a pump is equal to the distance moved by the piston in one stroke multiplied by the lifting force applied to the piston and this product multiplied by the number of lifting strokes. A **stroke** is the distance passed through by the piston between its lowest and highest positions. The force required to lift the piston is the weight of a column of water having the same diameter as the piston and whose height is equal

to the difference of level between the point of discharge and the level of the water in the reservoir or other source of supply, indicated by h in (*a*), Fig. 18. That this is true is readily seen. Thus, when the piston moves up, it lifts a column of water above it equal to the weight of a column of water having a diameter equal to that of the piston and a length equal to the stroke; at the same time the piston creates a partial vacuum that causes the water to follow the piston, and the amount of water that thus follows the piston is equal to the amount discharged in one stroke. The effect is exactly the same as though the water above the piston had been lifted the entire distance h. Letting h = height of lift in feet, d = diameter of piston in inches, s = stroke in inches, the volume of water lifted per stroke is $.7854d^2s$ cu. in. and the weight is $.7854d^2s \times \frac{1}{360} = .028362d^2s$ pounds; this multiplied by h in feet is the work done during one lifting stroke. Letting w = work in foot-pounds for one lifting stroke,

$$w = .028362d^2sh$$

Example.—Suppose that when the piston is at the upper end of its stroke, the distance between the bottom of the piston and the level of water supply is 23 ft. and that the distance between the bottom of the piston and the point of discharge is 57 ft. If the diameter of the piston is 8 in. and the stroke is 12 inches, what is the work done during one lifting stroke?

Solution.—The total lift of the water is $23 + 57 = 80$ ft. $= h$; the water on top of the piston must be raised 12 in., the length of the stroke; that is, a column of water 57 ft. high must be raised 12 in. The height of suction is 23 ft. and the amount of water discharged during one stroke must be raised through this height also. Consequently, the water discharged must be raised through a total height of $57 + 23 = 80$ ft. Substituting in the formula the values given,

$$w = .028362 \times 8^2 \times 12 \times 80 = 1742.6-$$ foot-pounds. *Ans.*

The actual work done would be considerably greater on account of friction and other resistances.

84. The Siphon.—A siphon is essentially a bent pipe or tube that conveys a liquid from a point of higher level to one of lower level, the highest point of the pipe being higher than the water level of the supply. Thus, referring to Fig. 19, the bent pipe $ABCD$ connects vessels M and N, and the highest point B of the pipe is higher than A, the level of the liquid in M. Assuming that the liquid is water, water will flow from M through the pipe to N as long as the water level in M is higher than in N. A siphon will not start itself, but when the part ABC of the siphon pipe is filled with water, water will flow from M to N until the

vessel M is emptied or the water level is the same in both vessels. The reason that the water rises in the part AB of the siphon is that when the water falls in the part BD, it leaves a partial vacuum behind it, and the atmospheric pressure on the water at A forces the water up the part AB. Evidently, the height $EB = h'$ must not exceed 34 ft.; in practice, it is not advisable to have it exceed 28 ft. The height $FE = h$ is the difference of level of the liquid in the two vessels. If h is in feet, $h \times \frac{1}{30}$ is the specific pressure in pounds per square inch that urges the water from M to N; because $BF \times \frac{1}{30}$ = specific pressure at D due to the water in BD, and this is decreased by the partial vacuum represented by $EB \times \frac{1}{30}$, thus leaving an active specific pressure of $(BF - BE)\ \frac{1}{30} = h \times \frac{1}{30}$.

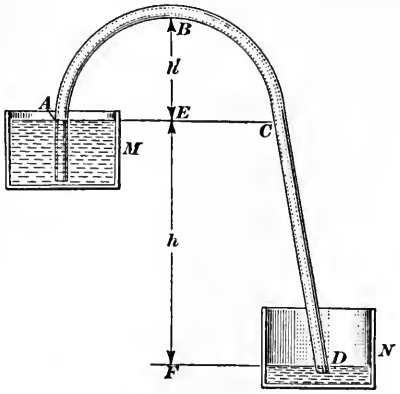

Fig. 19.

If the pipe is a small rubber tube, the siphon may be started when the height h' is not too great by placing the end D in the mouth and sucking out the air. If the water level in both vessels is in the same horizontal plane, the siphon will not work, since there will then be no specific pressure due to the difference in the water levels. The action of a siphon may be interrupted and resumed by means of a valve or clamp on the delivery pipe.

85. Barometers.—The word **barometer** is derived from the Greek, and literally means weight measurer; it is an instrument used for measuring the pressure of the atmosphere. There are two forms in common use: the **mercurial barometer** and the **aneroid barometer.**

A common form of mercurial barometer is shown in Fig. 20. It consists of a glass tube A, closed at the upper end, with the lower end, which is open, inserted in a cup of mercury C, the arrangement being similar to that shown in Fig. 17. The tube and cup are attached to a wooden frame F, to which is also attached a scale S and an accurate thermometer T. The scale S carries a vernier, by means of which (in the instrument shown) readings may be taken to $\frac{1}{10}$ mm., or about .004 in. Whenever a reading of the barometer is taken, a reading of the attached thermometer is also taken, and then, by means of tables or by calculation, if accuracy is desired, a correction is made of the reading to reduce it to 0° C. (= 32° F.). Another correction is made to reduce the reading to sea level, and a third correction is made for capillarity. When all these corrections have been made, the final result is called the **barometric pressure,** and it represents the pressure of the atmosphere, under standard conditions, at the time the reading was taken, the pressure being in millimeters or inches of mercury, according to how the scale is graduated.

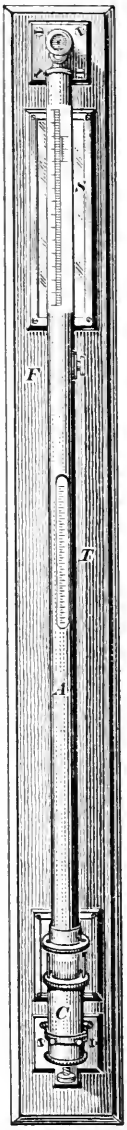

Fig. 20.

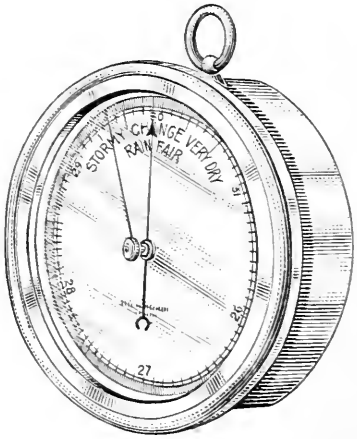

Fig. 21.

86. Aneroid barometers are made in many forms, some being of the shape and size of a watch; they contain no liquid. A common

form is shown in Fig. 21; it is a metal box, circular in shape, air-tight, and carrying a glass face and dial, the latter being graduated in inches and tenths. The air is exhausted from the box, and the back is so constructed and fastened to a set of multiplying levers that a very slight movement of the back will result in a large movement of the hand that passes over the face of the dial. An increase in the air pressure presses the back *in* slightly and moves the hand; a decrease in the air pressure causes the hand to move the other way. These barometers are compensated for temperature; and they are frequently so made that they can be adjusted for any particular altitude so as to read for sea level. When well made, they are very accurate, and some will show a difference in pressure for a vertical height of only a few feet, say between the floor and the top of a table.

87. Barometers are employed for three purposes: to show the altitude of a place above sea level or the difference of altitude between two places; to show the barometric pressure at any place at some particular time; and to indicate changes in the weather. In connection with the latter purpose, it is to be remembered that air containing water vapor is less dense than dry air; hence, if several observations at regular intervals throughout the day show a falling barometer, the moisture content (humidity) of the air is increasing, and if this continues, a storm is probable. A rising barometer, on the contrary, shows that the air is becoming dryer, and fair weather is probable.

88. Absolute Pressure.—Suppose a large book, say a dictionary, weighing 20 pounds to rest on top of a table, the pressure on the table due to the dictionary is 20 pounds. But there is also a pressure on top of the table (and the book) due to the atmosphere. The sum of the two pressures is the total pressure on the top of the table, and is called the absolute pressure. The **absolute pressure,** then, is the sum of the total external pressures, which may be called the *apparent pressure,* on any surface and the atmospheric pressure on that surface. Ordinarily, only the apparent pressures need be considered, since the atmospheric pressure in any direction is balanced by an equal (or practically equal) pressure in the opposite direction. Thus, in the case of the table, the downward pressure on the upper surface of the top is balanced by an upward pressure on the lower surface, and the pressures on the edges are also balanced. Therefore, insofar as

any movement of the table is concerned, the atmospheric pressure has no effect.

Absolute pressures begin at 0, called **zero absolute,** which is the pressure in a perfect vacuum, and they increase upward indefinitely. There can be no such thing as a negative absolute pressure.

89. Pressure Gauges.—Pressures of liquids and gases are usually measured by means of instruments called **gauges,** and pressures recorded on such instruments are called **gauge pressures.** The dial of a gauge is always so graduated that the zero point corresponds to the pressure of the atmosphere only on the fluid; in other words, to the pressure on the fluid when acted on only by the atmosphere. Consequently, the absolute pressure is always equal to the gauge pressure plus the barometric pressure. If the barometric pressure is not known, add 14.7 to the gauge pressure, if the pressure is recorded on the dial in pounds per square inch. In what are called **vacuum gauges,** which record pressures below 0, gauge pressure, the scale readings are in inches of mercury, and when converted into pounds per square inch, pressures in the partial vacuum (see Art. **79**), are absolute pressures. Gauges are also made to read in metric units, as millimeters of mercury or pressure per square centimeter.

Pressures on solids and liquids are nearly always taken as pressures above the atmosphere, i. e., as gauge pressures; in the case of gases, however, as will presently be shown, it is frequently necessary to use absolute pressures.

EXAMPLES

(1) Convert (*a*) 100°F. into degrees centigrade; (*b*) −40°C. into degrees F.; (*c*) 1265°C. into degrees Fahrenheit.

Ans. { (*a*) 37⅞°C. (*b*) −40°F. (*c*) 2309°F.

(2) What is (*a*) the tension of the steam in a condenser when the vacuum is 24.4 in.? (*b*) A tension of 12.5 lb. per sq. in. is equivalent to how many inches of vacuum?

Ans. { (*a*) 2.712 lb. per sq. in. (*b*) 4.47 in. of vacuum.

(3) The diameter of a pump piston is 6 in., its stroke is 9 in., and the total height of lift is 52 ft. 9 in.; what is the work done during one stroke?

Ans. 521.5 ft.-lb.

ELEMENTS OF PHYSICS

(PART 1)

EXAMINATION QUESTIONS

(1) If a body be weighed on a spring scale in Boston and also in Baltimore, in which place will it weigh the more and why?

(2) A certain body weighs 1 ton = 2000 pounds on a beam scale that has been standardized to $g = 980.665$; how much will it weigh on a spring scale in San Diego that has been standardized to the value of g at that place, if $g = 32.1373$?

Ans. 1997.71 lb.

(3) A body weighs 500 pounds and has a velocity of 40 ft. per sec. Due to the action of a steady force, the velocity is increased to 75 ft. per sec. in 3 seconds. What is (*a*) the acceleration? (*b*) what force is required to produce this change in velocity?

Ans. { (*a*) $11\frac{2}{3}$ ft. per sec.^{2} ; (*b*) 181.4 lb.

(4) A stone block (ashlar) is 8 in. high, 14 in. wide, and 9 ft. long. If its specific gravity is 2.5 what is (*a*) the weight of the block? what is the density of the stone?

Ans. { (*a*) 1092 lb. ; (*b*) 4.85

(5) The plunger of a hydraulic jack on which the load is supported is 4 in. in diameter; the piston that forces the water or other liquid into the jack has a diameter of $\frac{1}{2}$ in.; what load will the jack lift, if the pressure on the piston is 55 lbs?

Ans. 3520 lb.

(6) Referring to the last example, if the piston moves $3\frac{1}{2}$ in. during each stroke (*a*) how many strokes are required to raise the load $2\frac{3}{4}$ in.? (*b*) how much work would be done in doing this?

Ans. { (*a*) 50 strokes. ; (*b*) 80.67 foot-lb.

(7) A specimen of a certain alloy weighs 2 lb. 3 oz. in air and 1 lb. $13\frac{3}{4}$ oz. in water; what is the specific gravity of the alloy?

Ans. 8.667.

(8) Referring to the last example, what was the volume of the specimen in cubic inches? *Ans.* 9.09 cu. in.

(9) How many degrees Fahrenheit are equivalent (*a*) to —120° C.? to 625°C.?

Ans. { (*a*) —184°F. (*b*) 1157°F.

(10) Comparatively low pressures are sometimes measured by means of an instrument called a *manometer*, which records the pressure in inches of mercury. If the manometer reads 45.83 in. of mercury, what is (*a*) the equivalent pressure in pounds per square inch? (*b*) in atmospheres?

Ans. { (*a*) 22.51 lb. per sq. in. (*b*) 1.531 atmospheres.

(11) Convert (*a*) 1859°F. and —210°F. into degrees centigrade.

Ans. { (*a*) 1015°C. (*b*) —135°C.

(12) What is the pressure in a condenser when the vacuum gauge reads 22 in.? *Ans.* 3.89 lb. per sq. in.

(13) The plunger of a steam pump is $2\frac{1}{2}$ in. in diameter and its stroke is 5 in.; the height of suction is 17 ft.; the level of discharge is 26 ft. above the pump; and the pump makes 240 working strokes per minute. How much work must be done per minute by the pump? *Ans.* 9147 ft.-lb.

(14) The specific gravity of a certain liquid is 1.52 and of another liquid .977; (*a*) what would be the hydrometer reading of the first liquid in degrees Beaumé? (*b*) of the second liquid?

Ans. { (*a*) 49.6°Be. (*b*) 13.3°Be.

(15) The hydrometer reading for a certain liquid that is lighter than water is 26° Be., and for another liquid that is heavier than water the reading is also 26° Be.; what is (*a*) the specific gravity of the first liquid? (*b*) of the second liquid?

Ans. { (*a*) .8974. (*b*) 1.2185.

ELEMENTS OF PHYSICS

(PART 2)

PNEUMATICS

(Continued)

PROPERTIES OF PERFECT GASES

90. Boyle's Law.—While a theoretically perfect gas does not exist, air, hydrogen, nitrogen, oxygen, and many other gases may be considered as perfect gases in ordinary practical applications, and Boyle's law (also called Mariotte's law) may be used in all such cases. This law may be stated as follows:

The temperature remaining the same, the volume of any perfect gas varies inversely as its absolute pressure.

Let p_1 and v_1 be the absolute pressure and the volume of some perfect gas, say air, at a temperature of $t°$; suppose the pressure is changed to p_2, then, the temperature being still $t°$, the volume v_2 may be found from the proportion,

$$p_1 : p_2 = v_2 : v_1$$

in accordance with Boyle's law. From this proportion,

$$p_1 v_1 = p_2 v_2;$$

and, in general,

$$p_1 v_1 = p_2 v_2 = p_3 v_3 = \text{etc.} = k$$

in which k is a constant.

EXAMPLE.—If the volume of air in an air compressor is 1.82 cu. ft. at atmospheric pressure (14.7 lb. per sq. in.) and it is compressed to 38 lb. per sq. in., gauge, what is its volume, the temperature being the same in both cases?

SOLUTION.—The absolute pressure before compression is 14.7 and after compression, $38 + 14.7 = 52.7$ lb. per sq. in. Substituting in the above formula, $14.7 \times 1.82 = 52.7 \times v_2$, or $v_2 = \dfrac{14.7 \times 1.82}{52.7} = .5077$ — cu. ft. *Ans.*

91.—In accordance with Boyle's law, if the pressure be doubled, the volume will be halved, or if the pressure be halved (by ex-

pansion of the gas), the volume will be doubled. In general, if the pressure be increased (or decreased) n times, the volume will be decreased (or increased) $\frac{1}{n}$ times. This will be evident from the formula; because, if $p_2 = np_1$, $p_1v_1 = np_1v_2$ and $v_2 = \frac{1}{n}v_1$.

EXAMPLE.—Suppose air at a gauge pressure of 45 pounds per sq. in. and occupying a space of 984 cu. in. is allowed to expand to 4 times its volume. If the barometric pressure is 30.106 in., what is the pressure, gauge, after expansion, the temperature remaining the same?

SOLUTION.—The absolute pressure before expansion is $45 + 14.7 = 59.7$ lb. per sq. in. Since the volume increased 4 times, the pressure after expansion is $59.7 \div 4 = 14.925$ lb. per sq. in., absolute, and the gauge pressure is $14.925 - 14.7 = .225$ lb. per sq. in. *Ans.*

The same result might have been obtained by applying the formula of the last article. Thus, the volume after expansion was $984 \times 4 = 3936$ cu. in.; hence, $59.7 \times 984 = p_2 \times 3936$, and $p_2 = \frac{59.7 \times 984}{3936} = 14.925$.

92. The density and specific weight (weight of a unit of volume) vary directly as the pressure and inversely as the volume, the temperature remaining the same. This is a direct consequence of Boyle's law, as a little consideration will show. Suppose the volume of .256 pound of air at a temperature of $t°$ and a pressure of 14.7 lb. per sq. in., absolute, is 3.2 cu. ft. The density and specific weight of a gas are taken as equal numerically; and the density in this case is $\frac{.256}{3.2} = .08$. Now, if this air be allowed to expand to, say, 3 times its original volume, it will occupy a space of $3.2 \times 3 = 9.6$ cu. ft., and its density will be $\frac{.256}{9.6} = .02\frac{2}{3}$, (which is $\frac{1}{3}$ the original density. Or, if the pressure be increased n times, the volume will be $\frac{1}{n}$ times as large, and the density will be n times as great. Let w_1 and w_1 be the specific weights (densities) of the gas, v_1 and v_2 the corresponding volumes, and p_1 and p_2 the corresponding pressures, absolute; then,

$$w_1v_1 = w_2v_2 \qquad (1)$$

and

$$w_1p_2 = w_2p_1 \qquad (2)$$

EXAMPLE.—The weight of 1 liter of air at 0° C. and a pressure of 1 atmosphere is 1.2929 grams; what is the weight of 15 cu. m. when the pressure is 4.6 atmospheres, both pressures being absolute?

SOLUTION.—Applying formula (2), $w_1 = 1.2929$, $p_1 = 1$, $p_2 = 4.6$, and $1.2929 \times 4.6 = w_2 \times 1$, or $w_2 = 1.2929 \times 4.6 = 5.94734$ grams per liter.

Since 1 liter = volume of 1 cu. dm., and 1 cu. m. = 1000 cu. dm., 15 cu. m. at 0° C. and under a pressure of 4.6 atmospheres weigh

$$15 \times 1000 \times 5.94734 = 89210 \text{ g.} = 89.21 \text{ Kg.} \quad \textit{Ans.}$$

93. Gay-Lussac's Law.—Referring to Fig. 22, C is a cylinder, closed at one end and open at the other, and containing a tightly fitting piston P on which is laid a weight W. The space beneath the piston is filled with air under atmospheric pressure. When the piston is released, the weight of the piston and of the load W increases the specific pressure on the confined air; the piston moves downward, compressing the air until its tension exactly equals the specific pressure of the atmosphere plus the specific pressure due to the piston and weight W. Suppose the area of the piston is 25 sq. in., its weight is 10 pounds, and weight of W is 20 pounds. The specific pressure due to weight of P and W is $\frac{10 + 20}{25} = 1.2$ lb. per sq. in., and the tension of the confined air, assuming the barometric pressure to be 14.7 pounds per sq. in., is 14.7 + 1.2 = 15.9 lb, per sq. in., absolute. If, therefore, the volume underneath the piston before it was released be represented by v_1 and after release by v_2, the change in volume may be represented by the distance that the piston moves down. For, if h is the distance between the bottom of the cylinder and the bottom of the piston, before release (indicated by the dotted lines) and h' is the position after release, $v_1 = 25 \times h$ and $v_2 = 25 \times h'$, and $\frac{v_1}{v_2} = \frac{25h}{25h'} = \frac{h}{h'}$. Therefore, any change in the tension of the confined air will produce a change in volume that may be measured by—will be proportional to—the distance moved through by the piston up or down. It is assumed, for convenience, that the piston moves without friction and that any change in the tension of the air, however slight it may be, will cause a movement of the piston.

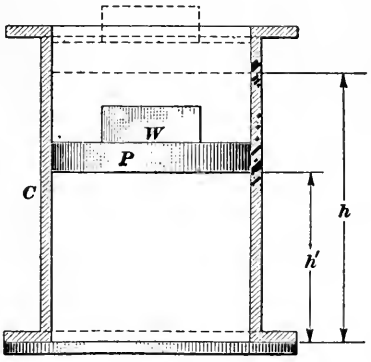

FIG. 22.

Suppose the temperature of the confined air is 0° C. (32° F.), as shown by a thermometer placed within the cylinder and that

heat is applied to the cylinder. It will be found that for every degree rise in temperature centigrade, indicated by the thermometer, the piston rises $\frac{1}{273}$rd of the distance h'; that is, for every degree rise in temperature, the volume increases $\frac{1}{273}$rd part. Note that the tension of the air is not changed, since the specific pressure is the same as before. The heat has increased the vibratory motion of the molecules of air and caused the air to expand. If the cylinder be cooled, so that the temperature of the air is less than 0° C., the piston falls $\frac{1}{273}$rd of the distance h' for every degree fall in temperature. Therefore,

When the pressure remains the same, the volume varies directly as the temperature.

Now suppose the piston be fixed so it cannot move; the volume then remains constant. Attach a gauge to the cylinder to measure the tension of the confined air. On heating the cylinder, it will be found that for every degree rise in temperature, the pressure (tension) of the air, as shown by the gauge, increases $\frac{1}{273}$d; and for every decrease of 1° C. in temperature, the pressure falls $\frac{1}{273}$d. Therefore,

When the volume remains the same, the pressure varies directly as the temperature.

These two statements may be expressed in the following general law:

The pressure and volume of a confined gas vary directly as the temperature, when either volume or pressure, respectively, is constant.

This is commonly called Gay-Lussac's law; it is also frequently called Charles' law, being named after two French scientists who discovered it.

94. Since 1° C. = $\frac{9}{5}$° = 1.8° F., and 273 × 1.8 = 491.4, it follows that for every degree rise in temperature indicated by a Fahrenheit thermometer, the volume or pressure will increase $\frac{1}{491.4}$ = .002035th, and vice versa, according as the pressure or volume is constant.

Let v = the volume of the air, p = tension of the air, t = number of degrees change in temperature, and c = the increase in volume or pressure due to 1° rise in temperature; then, when the pressure is constant,

$$v_1 = v + cvt = v(1 + ct); \qquad (1)$$

and when the volume is constant,

$$p_1 = p + cpt = p(1 + ct). \qquad (2)$$

If a centigrade thermometer is used, $c = \frac{1}{273} = .003663$; if a Fahrenheit thermometer is used, $c = .002035$. Note that if the temperature be increased 273° C. = 491.4° F., the volume or pressure will then be doubled, since the quantity in parenthesis, $1 + ct$, then becomes $1 + \frac{1}{273} \times 273 = 1 + 1 = 2$.

If the temperature falls, formulas (1) and (2) become

$$v_1 = v - cvt = v(1 - ct), \qquad (3)$$

and

$$p_1 = p - cpt = p(1 - ct). \qquad (4)$$

Example 1.—If the temperature of 3.42 cu. m. of air is raised 86° C. under constant pressure, what is the volume?

Solution.—Applying formula (1), $v = 3.42$ and $t = 86$; whence, $v_1 = 3.42(1 + .003663 \times 86) = 3.42 \times 1.31502 = 4.4974$ cu. m. *Ans.*

Example 2.—A certain amount of air is cooled at constant volume from 32° F. and a tension of 45.46 lb. per sq. in. absolute, to −92° F.; what is the tension after cooling?

Solution.—Applying formula (4), $p = 45.46$ and $t = 32° - (-92°) = 124°$; whence, $p_1 = 45.46(1 - .002035 \times 124) = 45.46 \times .74766 = 33.989$ lb. per sq. in. *Ans.*

95. Absolute Temperature.—Referring to formulas (3) and (4) of the last article, $t = t_0 - t_1$, in which t_0 is always the temperature at 0° C. or 32° F. Strictly speaking, t in formulas (1) and (2) is always equal to $t_1 - t_0$. With this understood, it will be seen that if $t = 273°$ C. in formula (3), $v_1 = v(1 - \frac{1}{273} \times 273) = 0$, that is, the volume disappears; this, of course is impossible, since air is matter, and matter cannot be destroyed. If, however, 273 be substituted for t in formula (4), $p_1 = 0$, that is, the air has no tension—its molecules have ceased to vibrate. For this reason, a temperature of 273° C. below 0° C. is called **absolute zero** of temperature. Since temperature is a measure of the vibrations of the molecules of a body, just as weight is a measure of the earth's attraction on a body, it is assumed that at absolute zero = −273° C., there is no molecular movement.

The temperature indicated by the thermometer is usually indicated by t, and the temperature above 0°, absolute, called the **absolute temperature,** is indicated by T. The absolute temperature centigrade is therefore equal to $T = t + 273$, usually written $273 + t$. Thus, the absolute temperature of the boiling point of water at sea level, with the barometer at 760 mm., is $273 + 100 = 373°$ C.

Since 273° C. = 491.4° F., and 0° C. = 32° F., absolute zero Fahrenheit = $-491.4° + 32° = -459.4°$; that is, absolute zero

on the Fahrenheit scale is 459.4° below 0 of the Fahrenheit thermometer. To find the absolute temperature on the Fahrenheit scale, add 459.4 to the reading of the Fahrenheit thermometer; thus, the boiling point of water has an absolute temperature of $459.4 + 212 = 671.4°$ F. $= 671.4 \times \frac{5}{9} = 373°$ C.

If the temperature is below zero on either scale, the absolute temperature will be found in exactly the same manner. Thus, 25° below zero, centigrade $= -25°$ C., and $273° + (-25°) = 273° - 25° = 248°$ C., absolute; and $-25°$ F. $= 459.4° - 25° = 434.4°$ F., absolute.

96. The quantity in parenthesis in formulas (1)–(4), Art. **94,** may be written $1 + \frac{1}{273}t = 1 + \frac{t}{273} = \frac{273 + t}{273} = \frac{T}{273}$; and $1 - \frac{t}{273} = \frac{273 - t}{273} = \frac{T}{273}$. Consequently, formulas (1) and (3) may be written

$$v_1 = v\left(\frac{T}{273}\right) = cvT, \qquad (1)$$

and formulas (2) and (4) may be written

$$p_1 = p\left(\frac{T}{273}\right) = cpT, \qquad (2)$$

the value of c being the same as in the preceding formulas, and T being the absolute temperature after heating or cooling. These two formulas assume that the original temperature of the gas is 273° C. = 491.4° F. If the original temperature is T_0 and the final temperature T_1, then

$$v_1 : v_0 = T_1 : T_0$$

and

$$p_1 : p_0 = T_1 : T_0$$

from which

$$v_1 = \frac{v_0 T_1}{T_0} \qquad (3)$$

and

$$p_1 = \frac{p_0 T_1}{T_0} \qquad (4)$$

Applying formula (2) to the second example of Art. **94,** $T_0 = 459.4 + 32 = 491.4$, $T_1 = 459.4 - 92 = 367.4$, $p_0 = 45.46$ and $p_1 = \frac{45.46 \times 367.4}{491.4} = 33.989$ lb. per sq. in., the same result as was previously obtained.

EXAMPLE.—If a constant volume of gas is heated from 60° F. to 340° F., and the final tension is 36 lb. per sq. in., gauge, what was the original tension?

SOLUTION.—$T_0 = 459.4 + 60 = 519.4$, $T_1 = 459.4 + 340 = 799.4$, $p_1 = 36 + 14.7 = 50.7$. Applying formula (4), $50.7 = \frac{799.4}{519.4} \times p_0$, or $p_0 = \frac{50.7 \times 519.4}{799.4} = 32.9$ lb. per sq. in., absolute $= 32.9 - 14.7 = 18.2$ lb. per sq. in., gauge. *Ans.*

It is useless to obtain more than 3 significant figures when the barometric pressure is *assumed* as 14.7 pounds per sq. in.

97. Combined Law of Boyle and Gay-Lussac.—Boyle's law and Gay-Lussac's law may be combined into a single law, as follows:

The product of the pressure and volume of any perfect gas varies directly as the absolute temperature.

Let p_0, v_0, and T_0 be the original pressure, volume, and temperature, p_1, v_1, and T_1 the pressure, volume, and temperature after a change; then

$$\frac{p_0 v_0}{T_0} = \frac{p_1 v_1}{T_1} = \frac{p_2 v_2}{T_2} = \text{etc.} = R \qquad (1)$$

in which R is a constant for any particular gas, but has different values for different gases. To find the value of R for air, write

$$\frac{p_0 v_0}{T_0} = R$$

Here p_0 is the absolute specific pressure = 14.6946 lb. per sq. in. at sea level, with the barometer at 29.9213 in., and the thermometer at 32° F., for which $T_o = 32° + 459.4° = 491.4°$. To fix the value of v_0, note that the volume of 1 pound of air (the specific volume) under the above conditions is $\frac{1}{.08071}$, since 1 cu. ft. of air under these conditions weighs .08071 lb. Substituting these values in the last equation,

$$\frac{14.6946 \times 1}{491.4 \times .08071} = R, \text{ or } R = .370506, \text{ say } .37051$$

Consequently, for air, $\frac{pv}{T} = .37051$, or

$$pv = .37051\ T \qquad (2)$$

Formula (1) can be applied only when the weight of the air is 1 pound; to make it applicable to any weight of air w lb., multiply the right-hand member of the equation by w, and

$$pv = .37051\ wT \qquad (3)$$

To find the value of R for any gas other than air, divide, .370506 by the specific gravity of the gas. Thus, the specific gravity of hydrogen is .06926, and the value of R for hydrogen is $.370506 \div .06926 = 5.3495$; the specific gravity of oxygen is 1.10535, and the value of R for oxygen is $.370506 \div 1.10535 = .33519$.

In formulas (2) and (3), p is the pressure (absolute) in pounds per square inch, v is the volume in cubic feet, T is the absolute temperature, Fahrenheit, and w is the weight of the air in pounds. In formula (1), v_0, v_1, etc., may be expressed in any units—cubic feet, cubic meters, etc.

EXAMPLE 1.—What is the weight of 18,000 cubic feet of air at a temperature of 60° F. and a tension of 26.3 lb. per sq. in., gauge?

SOLUTION.—The absolute pressure is $14.7 + 26.3 = 44$ lb. per sq. in. and the absolute temperature is $459.4 + 60 = 519.4°$. Substituting in formula (3), $44 \times 18000 = .37051 \times w \times 519.4$; whence,

$$w = \frac{44 \times 18000}{.37051 \times 519.4} = 4115.5 \text{ lb.} \quad Ans.$$

EXAMPLE 2.—The volume of the cylinder of an air compressor is 28,276 cu. in. If the reading of the barometer, corrected, is 30.1 inches, and the temperature of the air is 56° F., it can be shown that if the air be compressed to one-fourth its volume without losing any heat by radiation or otherwise, the pressure (tension) will be 104.4 lb. per sq. in., absolute; what will be its temperature?

SOLUTION.—Since the volume, pressure, and temperature all change, apply formula (1). Here p_0 = the pressure of the atmospheric air $= 30.1 \times .49111 = 14.782$ lb. per sq. in., $v_0 = 28,276$ cu. in., $T_0 = 459.4 + 56 = 515.4$, $p_1 = 104.4$ lb. per sq. in., and $v_1 = 28,276 \times \frac{1}{4} = 7069$ cu. in. Therefore, by formula (1), $\frac{14.782 \times 28276}{515.4} = \frac{104.4 \times 7069}{T_1}$, from which,

$$T_1 = \frac{104.4 \times 7069 \times 515.4}{14.782 \times 28276} = 910° \text{ absolute} = 910 - 459.4 = 450.6° \text{ F.}$$

Ans.

EXAMPLE 3.—What is the specific volume of atmospheric air when the barometer stands at 29.652 in. and the temperature is 100° F.?

SOLUTION.—The specific volume is the volume of 1 pound in cubic feet; hence, applying formula (2), $p = 29.652 \times .49111 = 14.562$ lb. per sq. in., $T = 459.4 + 100 = 559.4$, and $14.562 \times v = .37051 \times 559.4$; from which, $v = \frac{.37051 \times 559.4}{14.562} = 14.233$ cu. ft. *Ans.*

98. Mixture of Gases.—Suppose two liquids of different densities to be mixed and that the mixture is allowed to stand. If there be no chemical action between the liquids, it will be found that after a time the liquids have separated, the lighter floating on the heavier. The case is entirely different with gases, since

if two vessels containing gases of different densities are connected with each other, it will be found after a time that the two gases have mixed, the density of the mixture in both vessels being the same; even though the vessel containing the lighter gas be placed over the other, the same result will be obtained—the density and quality of the mixture of the gases in both vessels will be the same. This is an extremely useful property of gases; otherwise no life of any kind could exist. As an example of this fact, it must be borne in mind that when anything is burned or when any animal or vegetable matter decays, carbon dioxide gas is given off, it being a product of combustion and decay, which is slow combustion. Since carbon dioxide is more than 1½ times as heavy as air, it follows that if gases separated in accordance with their densities, as in the case of liquids, the carbon dioxide would form a layer covering the entire earth, and would kill all forms of animal life.

Rule.—*If two or more gases are mixed, the product of the pressure and volume of the mixture is equal to the sum of the products of the pressures and volumes of the gases, provided there is no chemical action and the temperature of the gases is the same.*

Let P and V be the pressure and volume of the mixture, p_1 p_2, p_3, etc., the pressures of the gases, and v_1, v_2, v_3, etc., the corresponding volumes; then

$$PV = p_1v_1 + p_2v_2 + p_3v_3 + \text{etc.}$$

Example.—Suppose two vessels to contain air at the same temperature. The volume of one vessel is 5.72 cu. ft. and the tension of the air is 17 lb. per sq. in., gauge; the volume of the other vessel is 8.36 cu. ft. and the tension of the air is 24 lb. per sq. in., gauge; if they are allowed to communicate with a third vessel (empty) having a volume of 3.48 cu. ft., what will be the pressure of the mixture?

Solution.—The volume of the mixture is $5.72 + 8.36 + 3.48 = 17.56$ cu. ft., since if both vessels communicate with the empty vesssel, the air can mix in all three vessels. Then, applying the formula, the absolute pressures are $14.7 + 17 = 31.7$ and $14.7 + 24 = 38.7$, and $P \times 17.56 = 31.7 \times 5.72 + 38.7 \times 8.36 = 504.856$, from which, $P = \frac{504.856}{17.56} = 28.75$ lb. per sq. in., absolute $= 28.75 - 14.7 = 14.05$ lb. per sq. in., gauge. *Ans.*

If the gases are alike and the temperatures are different, then, letting T, T_1, T_2, etc., be the corresponding absolute temperatures,

$$\frac{PV}{T} = \frac{p_1v_1}{T_1} + \frac{p_2v_2}{T_2} + \frac{p_3v_3}{T_3} + \text{etc.}$$

Example.—In the example of the last article, suppose the temperature of the air in the smaller vessel had been 95° F., in the larger vessel 50° F.,

and the temperature of the mixture after a time was found to be 62° F.; what was the tension of the mixture at that time.

SOLUTION.—The absolute temperatures are $T = 459.4 + 62 = 521.4°$, $T_1 = 459.4 + 95 = 554.4$, and $T_2 = 459.4 + 50 = 509.4$. Applying the formula, $\frac{P \times 17.56}{521.4} = \frac{31.7 \times 5.72}{554.4} + \frac{38.7 \times 8.36}{509.4} = .96219$, from which $P = \frac{521.4 \times .96219}{17.56} = 28.57$ lb. per sq. in., absolute $= 28.57 - 14.7 = 13.87$ lb. per sq. in., gauge. *Ans.*

EXAMPLES

(1) Referring to Fig. 22, if 1.86 cu. ft. of air under a gauge pressure of 51.5 lb. per sq. in. be allowed to expand to 4.28 cu. ft. by decreasing the weight W, what will be the pressure if there is no change in the temperature? *Ans.* 13.94 lb. per sq. in., gauge.

(2) Referring to Art. **97**, what is the weight of 220,000 cu. ft. of hydrogen at 75°F. under a pressure of 1 atmosphere? *Ans.* 1130.8 lb.

NOTE.—When stated in this manner, the pressure is always understood to mean absolute pressure and under standard conditions *i.e.*, 14.6946 lb. per sq. in.

(3) A certain volume of air has a tension of 21.7 lb. per sq. in., gauge, and a temperature of 265°F.; it is cooled until the temperature is 62°F.; what is the tension? *Ans.* 11.93 lb. per sq. in., gauge.

(4) A vessel containing 750 cu. in. of free air has forced into it 2120 cu. in. of air under a pressure of 52.63 lb. per sq. in., gauge. If the temperature of both volumes of air and of the mixture is the same and the barometric pressure is 30.6 in. of mercury, what is the tension of the mixture? *Ans.* 191.25 lb. per sq. in., gauge.

NOTE.—When the barometric pressure is given, it must be used instead of 14.7 or 14.6946 lb. per sq. in. in finding the absolute pressure, and vice versa.

(5) If, in the last example, the temperature of the free air had been 50° F., and that of the air in the other vessel 208°, what is the tension of the mixture when its temperature is 92°? *Ans.* 158.51 lb. per sq. in., gauge.

HEAT

NATURE AND MEASUREMENT OF HEAT

99. Nature of Heat.—Heat may be defined as *molecular energy*. The molecules of a body have mass, and since they are in rapid motion, they possess kinetic energy, which manifests itself in the phenomenon called heat. At the temperature of absolute zero, all movement of the molecules ceases, the body posessess no heat, and is absolutely inert—dead. For any temperature above 0°, absolute, the body has an amount of heat that is proportional to the temperature, the temperature being dependent upon

the velocity of the molecules and being a measure of the amount of heat contained in the body.

Heat is *energy*, and since energy manifests itself in different forms, heat may be changed into different forms of energy, such as mechanical energy, chemical energy, and electrical energy; conversely, these three forms of energy may all be converted into heat.

100. Quantity of Heat.—The temperature of a body does not depend upon its mass or size. This is evident from the fact that if an ordinary pin and a ten-pound iron weight be placed in a tub of hot water, the pin, weight, and water will all have the same temperature after a time. In other words, temperature may be regarded as a measure of the *specific* molecular energy of a body; it is therefore independent of the size and shape of the body. At the same time, it is obvious that the iron weight contains a greater amount of heat (kinetic molecular energy) than the pin, and it is desirable to have some means of measuring heat in quantity, and this is accomplished by (*a*) measuring the amount of energy expended in raising the temperature, that is, by changing another form of energy into heat; (*b*) measuring the energy produced by a fall of temperature, when changing heat into some other form of energy.

The most obvious way of measuring heat is by measuring the *work* required to overcome friction. Assuming that there is no wear or that the wear is so exceedingly small that it can be disregarded, all the work of friction is converted into heat. Taking as a standard for one heat unit the work of friction required to heat one pound of water from 63°F. to 64°F., it has been found by careful and elaborate tests that the amount of work required for this purpose is very closely 778 foot-pounds, which is called the **mechanical equivalent of heat.** When the centigrade scale is used, the work required to raise 1 kilogram of water from 17° to 18°C. (62.6°F. to 64.4°F.) is very nearly 427 meter-kilograms.

101. The **British thermal unit** (abbreviation, B.t.u.) is the amount of heat required to raise the temperature of one pound of water 1° F. (from 63° to 64°), and its mechanical equivalent is 778 foot-pounds.

The **calorie** (abbreviation, cal.) is the amount of heat required to raise the temperature of one kilogram of water 1°C. (from 17° to 18°), and its mechanical equivalent is 427 m.-kg.

The reason for specifying the temperature is that the amount of heat required to raise the temperature of a given weight of water one degree is different for different temperatures.

Since 1 kg. = 2.204622 lb. and 1°C. = $\frac{9}{5}$ = 1.8°F., 1 calorie is equal to $2.204622 \times 1.8 = 3.96832$ B.t.u. Also, 1 m.-kg. $= 3.28084 \times 2.204622 = 7.2330$ ft.-lb., and 1 calorie $= 778 \times \frac{3.96832}{7.233} = 426.8 +$, say 427 m.-kg.

For many purposes, the calorie is too large a unit for convenient use, and what is called the small calorie or gram calorie is then employed; this unit is, the amount of heat required to raise the temperature of 1 gram of water from 17°C. to 18°C., and since a gram is 1-1000th of a kilogram, the gram calorie is 1-1000th of a large calorie (kilogram calorie), or 1000 gram calories = 1 kilogram calorie. The gram calorie is largely used by chemists, physicists, and scientists generally, while the kilogram calorie is used in engineering calculations. Both units are called calories, and the reader must be on his guard to distinguish which is meant; but a little familiarity with their use will soon show which is intended, since one is 1000 times as large as the other.

102. Heat Capacity.—The **capacity** of a body for heat depends upon the weight (strictly speaking, the mass) of the body and upon the material of which the body is composed; for equal weights, the capacity depends only on the material composing the body. It can be shown by experiment that the number of heat units required to raise the temperature of equal weights of iron, lead, copper, wood, etc. 15°, say, are quite different; and when these substances are cooled, the amount of heat given off (which is exactly the same as that imparted in raising the temperature the same amount the body is cooled) is also different. The more heat required to raise the temperature the greater is the capacity of the body for heat, and vice versa.

103. Specific Heat.—The specific heat of a substance is the amount of heat required to raise the temperature of a unit weight of the substance 1° divided by the amount of heat required to raise the temperature of the same weight of water 1° at some specified temperature. The specific heat of water is generally considered to be 1, in which case, the specific heat of any substance may be defined as the number of B.t.u. required to raise the temperature of the substance 1°. If the specific heat of a substance be denoted by c, the weight by w, and the

difference in temperature before and after heating (or cooling) by t, the number of heat units U (B.t.u.) required to heat the body $t°$ (or given off in cooling $t°$) is

$$U = cwt$$

For example, if the specific heat of lead is .0315, how many heat units are required to raise the temperature of 25 lbs. from 58°F. to 330°F.? here $t = 330 - 58 = 272$, $w = 25$, and $c = .0315$, therefore, the number of heat units required is $U = .0315 \times 25 \times 272 = 214.2$ B.t.u., which is equivalent to $214.2 \times 778 = 166{,}647.6$, say 166,600 foot-pounds of work. When multiplying by 778 (or 427), the mechanical equivalent, it is useless to retain more than 3 or 4 significant figures in the product; this statement also applies to multiplying by the specific heat.

104. The specific heat of most substances (if not all) is not constant, but varies somewhat with the temperature and with the pressure; for this reason, results obtained by application of the formula in the last article are not strictly accurate, but are sufficiently so for most practical purposes. The following table gives *average* values of the specific heats of some solids and liquids that may be used for practical purposes in connection with engineering calculations. Different authorities give slightly different values. Some of these values are useful in pulp mills, when in calculating the unit required to melt sulphur, etc.

SPECIFIC HEATS

SOLIDS

Aluminum	.218	Ice	.504	Sulphur	.180
Brass	.090	Lead	.0315	Tin	.055
Cast Iron	.130	Platinum	.0325	Tungsten	.034
Charcoal	.203	Steel (soft)	.116	Wrought Iron	.127
Copper	.095	Steel (hard)	.117	Zinc	.094
Gold	.032	Silver	.056	Glass	.199

LIQUIDS

Acetic Acid	.51	Hydrochloric Acid	.60	Lead (melted)	.041
Alcohol (pure)	.70	Mercury	.033	Sulphur (melted)	.235
Benzine	.43	Sulphuric Acid	.336	Tin (melted)	.058
Glycerine	.576	Water	1	Turpentine	.472

105. The specific heat of gases has two different values, according to whether the gas is heated at constant volume or under constant pressure. When heated at constant volume, all the heat goes to increasing the molecular energy, that is, the tempera-

ture; but when heated under constant pressure, the gas expands and does work, the work being equal to the increase in volume multiplied by the tension of the gas. Consequently, it requires more heat to raise the temperature of a gas under constant pressure than at constant volume. Letting c_p = specific heat under constant pressure and c_v = specific heat at constant volume, the following table gives the specific heats of some gases.

SPECIFIC HEATS

GASES

	c_p	c_v		c_p	c_v
Acetylene.....	.270	.024	Hydrogen.....	3.42	2.44
Air.....	.241	.171	Nitrogen.....	.247	.176
Carbon Monoxide..	.243	.172	Oxygen.....	.217	.155
Carbon Dioxide....	.210	.160	Sulphur Dioxide.	.154	.123

When the pressure and volume both change, as when a certain volume of compressed air expands and does work, the specific heat does not have either of the two values given above; the law that connects the pressure and volume under those circumstances is quite complicated, and will not be given here.

106. Temperature of Mixtures of Different Bodies.—If two or more substances of the same material or of the same specific heats and having different temperatures are mixed, the temperature of the mixture is readily found. Suppose, for example, that 10 pounds of water at 50° are mixed with 10 pounds of water at 86°; the temperature of one must be increased to the temperature of the mixture, and the temperature of the other must be decreased to the temperature of the mixture; then, since both bodies weigh the same, one receives as much heat as the other loses, and the temperature of the mixture will be midway between the temperatures of the two bodies, or $\frac{50° + 86°}{2} = 68°$. Here one body has increased its temperature $68° - 50° = 18°$, and the temperature of the other body has decreased $86° - 68° = 18°$.

Suppose, now, that 4 pounds of water at 50° are mixed with 9 pounds of water at 86°; one body still receives as much heat as the other loses, but the temperature of the mixture will not be the mean of the temperatures of the two bodies, because the larger body has a greater *capacity* for heat than the smaller body; hence, any change in the temperature of the larger body will produce a greater change in the smaller body. Let x = the temperature

of the mixture; then, evidently, $(86 - x) \times 9 = (x - 50) \times 4$, since the larger body gives up $(86 - x) \times 9$ heat units and the smaller body receives the same number, which must equal $(x - 50) \times 4$ heat units, the specific heat of water being 1. The above equation reduces to $774 - 9x = 4x - 200$, which becomes, by transposition, $13x = 974$, or $x = 74.923°$. This result might have been arrived at in the following manner: let t_m and w_m be the temperature and weight of the mixture, t_1 and w_1 the temperature and weight of one body, t_2 and w_2 the temperature and weight of another body of the same material, etc.; then,

$$w_m t_m = w_1 t_1 + w_2 t_2 + w_3 t_3 + \text{etc.} \qquad (1)$$

In the present case, $w_m = w_1 + w_2 = 4 + 9 = 13$, $t_1 = 50$, and $t_2 = 86$; substituting in the formula,

$$13 t_m = 4 \times 50 + 9 \times 86 = 200 + 774 = 974$$

from which, $t_m = 74.923°$

the same result as before. It will also be noted that the same operations are performed in both cases.

If only the temperature of the mixture is desired, the above formula may be written.

$$t_m = \frac{w_1 t_1 + w_2 t_2 + w_3 t_3 + \text{etc.}}{w_1 + w_2 + w_3 + \text{etc.}} \qquad (2)$$

107. If, however, the bodies mixed have different specific heats, every term in the righthand member of the above formula must be multiplied by the specific heat of the corresponding body, since the amount of heat given up or received by any body is *cwt* (Art. **103**). and this is the same for all the bodies, including the mixture. In such case,

$$t_m = \frac{c_1 w_1 t_1 + c_2 w_2 t_2 + c_3 w_3 t_3 + \text{etc.}}{c_1 w_1 + c_2 w_2 + c_3 w_3 + \text{etc.}} \qquad (3)$$

Example 1.—Suppose a copper ball weighing 1.4 pounds and having a temperature of 860° is placed in a lead vessel weighing 3.8 pounds and containing 7.5 pounds of mercury, the temperature of the vessel and mercury being 74°; after all three bodies have arrived at the same temperature, without any loss of heat, what is the temperature of the mixture?

Solution.—From the table of Art. **104.** specific heat of copper is .095, of lead .0315, and of mercury .033. Substituting in the above formula,

$$t_m = \frac{.095 \times 1.4 \times 860 + .0315 \times 3.8 \times 74 + .033 \times 7.5 \times 74}{.095 \times 1.4 + .0315 \times 3.8 + .033 \times 7.5} = 283°. \; Ans.$$

It is useless to use more than three (or at most, four) significant figures when the constants (specific heats) are given to only two or three significant figures.

Example 2.—How many heat units (B.t.u.) are required to raise the temperature of a cast-iron ball weighing 28 lb. 4 oz. from 28°C. to 236°C.?

SOLUTION.—Here $t = 236 - 28 = 208°C. = 208 \times 1.8 = 374.4°F.$ Using the formula of Art. **103**, $c = .13$, $w = 28.25$ pounds, and

$$U = .13 \times 28.25 \times 374.4 = 1375 \text{ B.t.u.} \quad Ans.$$

Had the result been required in calories, change the weight to kilograms, obtaining $28.25 \div 2.2046 = 12.814$ kg. In this case, $t = 208°C.$, and $U = .13 \times 12.814 \times 208 = 346.5$ cal. Or, since 1 cal. = 3.96832 B.t.u., $1375 \div 3.96832 = 346.5$ cal.

EXPANSION OF BODIES BY HEAT

108. Kinds of Expansion.—When the temperature of the body is changed its volume changes, an increase in temperature usually resulting in an increase in volume, an important exception being water, which decreases in volume from 32°F. to 39°F. and then increases for all higher temperatures. When the volume increases, the body is said to **expand,** and the change in volume is called **cubic expansion.** As the result of cubic expansion, the area of the surface and of any section is increased, and this change is called **surface expansion;** likewise, the length of any line is increased, and this change is called **linear expansion.** When a body is cooled, the opposite effect is produced, that is, the body **contracts,** which may be called *negative* expansion. Steel bridges generally have one end free, so they can move in the direction of the length of the bridge, since the bridge will be longer on a hot day in the summer than on a cold day in the winter; the difference in length may be an inch or more, depending on the length of the bridge and the difference in temperature. If both ends were rigidly fastened, this difference in length would tend to make the bridge buckle in the summer and tend to pull it apart in the winter.

109. Coefficient of Expansion.—The increase in length for an increase in temperature of 1° between 32°F. and 33°F. divided by the original length at 32° is called the **coefficient of linear expansion;** similarly, the increase in area divided by the original area, and the increase in volume divided by the original volume, under the same conditions, are called the **coefficient of surface expansion** and **coefficient of cubic expansion,** respectively. In the case of solids and liquids, the coefficient of expansion is so small that the coefficient of surface expansion is always taken as 2 times the coefficient of linear expansion, and the coefficient of cubic expansion is always taken as 3 times the coefficient of linear expansion.

For every degree (Fahrenheit) rise in temperature, the body increases in length an amount equal to the product of the coefficient (which is different for different materials) and the length at 32°, and when the temperature of a body decreases, the contraction in length (negative expansion) is equal to the expansion of the body for the same rise in temperature. The coefficient of expansion varies somewhat with the temperature, but it is sufficiently accurate in practice to multiply the length at the original temperature by the average value of the coefficient and by the difference in temperature to find the increase in length. Let k_1, k_2, and k_3 be the coefficients of linear, surface and cubical expansion, respectively; let t_1 be the original temperature and t_2 the final temperature; let l_1 and l_2, a_1 and a_2, and v_1 and v_2 be the lengths, areas, and volumes at t_1 and t_2, respectively; then,

$$l_2 = l_1 + k_1 l_1 (t_2 - t_1) = l_1 [1 + k_1 (t_2 - t_1)] \qquad (1)$$

$$a_2 = a_1 [1 + k_2 (t_2 - t_1)] \qquad (2)$$

$$v_2 = v_1 [1 + k_3 (t_2 - t_1)] \qquad (3)$$

If the original temperature is higher than the final temperature, as when the body cools, the quantity in parenthesis, $t_2 - t_1$, will be negative and the final length, area, or volume will be *less*, as it should be.

The following table gives for temperatures Fahrenheit the coefficients of expansion (average values) for a number of substances.

COEFFICIENTS OF EXPANSION

	k_1	k_2	k_3
Aluminum	.00001234	.00002468	.00003702
Brass	.00000957	.00001914	.00002871
Copper	.00000887	.00001774	.00002661
Gold	.00000786	.00001572	.00002352
Iron (cast)	.00000556	.00001112	.00001668
Iron (wrought)	.00000648	.00001296	.00001944
Platinum	.00000479	.00000958	.00001437
Silver	.00001079	.00002158	.00003237
Steel	.00000636	.00001272	.00001908
Tin	.00001163	.00002326	.00003489
Zinc	.00001407	.00002814	.00004221
Mercury (60°F.)	.00003333	.00006667	.00010000
Alcohol (ethyl)	.000203	.000407	.000610
Alcohol (methyl)	.000267	.000533	.000800
Gases (perfect)	.000678	.001357	.002035

The coefficient of cubic expansion of gases is $1 \div 491.4 = .002035$.

The only liquids included are mercury and alcohol, because these two liquids are used in thermometers and because the coefficients of expansion for liquids vary considerably with the temperature.

110. In machine shops, what are called **shrinking fits** are frequently used. For instance, the tires on locomotive drivers are "shrunk on." The part of the driver on which the tire is shrunk is called the wheel center; this is turned to a certain desired size, and the tire is bored a trifle smaller. The tire is then heated to quite a high temperature which causes it to expand sufficiently to slip over the wheel center. When cooled, the tire contracts and grips the wheel center with immense force. Crankpins, also, are frequently shrunk on in this manner.

EXAMPLE 1.—It is desired to shrink a steel tire on a locomotive driver; if the diameter of the wheel center is 73.471 in. and the tire is bored to a diameter of 73.4 in., to what temperature (approximately) must the tire be heated to slip on the wheel center, assuming that the diameter when heated is .0013 in. larger than the wheel center?

SOLUTION.—Since the diameter is a line, the case is one of linear expansion, and formula (1) may be used. Here $l_1 = 73.4$, $l_2 = 73.471 + .0013 = 73.4723$, $k_1 = .00000636$ (from table), and it is desired to find the difference of temperature $t_2 - t_1$. Solving formula (1) for $t_2 - t_1$, $t_2 - t_1 = \frac{l_2 - l_1}{k_1 l_1} = \frac{73.4723 - 73.4}{73.4 \times .00000636} = 155°\text{F}$. If the original temperature of the tire is, say 70°F., the temperature after heating is $70 + 155 = 225°\text{F}$. *Ans.*

EXAMPLE 2.—A round copper plate has a diameter of 8.336 in. at 62°F.; what will be the decrease in area when the temperature is 32°?

SOLUTION.—The original area is $.7854 \times 8.336^2 = 54.5766$ sq. in. Applying formula (2), the area after cooling to 32° is (since k_2 for copper $= .00001774$) $a_2 = 54.5766\,[1 + .00001774(32 - 62)] = 54.5766 \times .9994678 = 54.5476$ sq. in., and the decrease in area is $54.5766 - 54.5476 = .029$ sq. in. *Ans.*

The same result might have been obtained somewhat more easily; thus, the decrease in area is evidently equal to $k_2 a_1 t = ..00001774 \times 54.5766 \times (62 - 32) = .029$ sq. in.

EXAMPLE 3.—A silver vessel holds exactly 1 liter when the temperature is 20°C.; how many cubic centimeters will it hold when the temperature is 100°C.?

SOLUTION.—Formula (3) must be used in this case, and k_3 for silver is .00003237; the difference in temperature is $80 - 20 = 60°\text{C.} = 60 \times 1.8 = 108°\text{F}$. Therefore, since 1000 c.c. = 1 liter = v_1,

$$v_2 = 1000(1 + .00003237 \times 108) = 1003.5 \text{ c.c.} = 1.0035\ l. \quad \textit{Ans.}$$

The result obtained in the last example shows how necessary it is to consider the temperature when accurate measurements of volume are desired.

HEAT TRANSMISSION

111. Heat may be *transmitted* or *propagated* from one point or place to another point or place in three ways: by *conduction;* by *convection;* by *radiation.*

112. Conduction.—If one end of an iron rod be heated, it will be found that after a time the other end is perceptibly warmer; and if the process continues, the end not in contact with the source of heat will become hot. The explanation is that the molecules at the heated end transmitted molecular energy (heat) to the adjacent molecules, these, in turn transmitted heat to the molecules adjacent to them, and so on, until the other end was reached. The longer the one end is in contact with the source of heat the hotter will the other end become; in other words, heat is conducted from one end to the other, passing from molecule to molecule. Again, if a vessel containing a fluid, say water, be placed in contact with a fire, as a kettle of water on a stove, the vessel becomes hot, and after a time, the water also becomes hot. In this case, two different substances are in contact—the metal of the vessel and the water in the vessel—and the heat is conducted *through* the metal, molecular energy is imparted to the molecules in contact with the metal and then to the adjacent water molecules, until all the water is heated.

Heating by conduction only is in any case a relatively slow process; but, nevertheless, some materials conduct heat a great deal faster than others. Those substances that conduct heat best are called **good conductors,** while those that conduct heat poorly are called **poor conductors** or **insulators.** The metals are all classed as good conductors, while fluids (except mercury, which is a metal) are poor conductors. Silver is the best known conductor of heat and copper is next. All organic substances are poor conductors; this enables trees and other forms of vegetation to withstand sudden changes in the weather without injury, since they heat slowly and cool with equal slowness. Moreover, the bark is a poorer conductor of heat than the wood beneath it, and this gives added protection. Rocks, earth, soot, and all loose materials transmit heat the more slowly as their density and uniformity of composition decrease.

113. Coefficient of Conductivity.—**The coefficient of conductivity** (also called the **thermal conductivity**) *is the quantity of*

heat that will flow in one hour through a plate one foot thick, and having an area of one square foot when the difference of temperature between the two sides of the plate is one degree Fahrenheit. It may also be expressed in calories per second conducted by one cubic centimeter, temperatures being in degrees centigrade. Let t_1 and t_2 be the temperatures on the two sides of the plate, a = area of plate in square feet, b = thickness of the plate in feet, U = heat units in B.t.u. transmitted per hour, and k = coefficient of conductivity; then

$$U = \frac{ka}{b}(t_1 - t_2)$$

when t_1 is the higher temperature.

The following table gives the value of k for a number of different materials; its value usually increases somewhat with the temperature, for which reason, the temperature at which k was determined is also given. When no temperature is given, it is understood to be 64°F.

COEFFICIENTS OF CONDUCTIVITY

Metals

Aluminum	116.0	Iron, wrought	34.9	Silver	244.0
Copper	220.0	Steel	26.2	Tin	37.6
Gold	169.0	Lead	19.8	Zinc	64.1
Iron, cast (129°)	27.6	Mercury (32°)	3.6	Brass (63°)	63.0

Fluids

Alcohol (77°)	104	Water (63°)	032	Carbon Dioxide (32°)	0079
Benzine (41°)	081	Air (32°)	0126	Hydrogen (32°)	0775
Petroleum (55°)	086	Ammonia (32°)	0111	Nitrogen (32°)	0085
Turpentine (55°)	079	Carbon Monoxide (32°)	0121	Oxygen (32°)	0136

Insulating Materials

Asbestos (100°)	097	Silk (100°)	028	Pulverized Cork (100°)	026
Cotton (100°)	035	Wool (100°)	027	Infusorial Earth (100°)	039

Miscellaneous

Cardboard	120	Linen	050	Rubber	100
Cement	170	Mica	440	Sand	031
Felt	022	Mineral Wool	035	Sawdust	037
Firebrick	750	Paper	075	Vulcanite	210
Graphite	2.90	Porcelain	600	Wood Ashes	041

114. An inspection of the table will show what poor conductors the fluids are as compared with the metals. Thus, the value of k

for steel is 26.2 ÷ .0126 = 2000 times that for air, and the value of k for copper is 220 ÷ .0126 = 17,460 times that for air. A layer of air is therefore a very good protection against loss of heat; hence, when making a boiler setting, it is always well to make the walls double, with an air space between. Water is also a very poor conductor of heat; in fact, if a piece of ice be placed a little below the top surface of a vessel of water and heat is applied to the water above the ice, the water may be boiled without melting the ice.

When steam is conveyed in pipes from point to point, the pipe should be covered with some good non-conducting heat material —asbestos, mineral wool, wood ashes, etc.—to keep the heat within the pipe. A covering of any kind, provided there is an air layer (even a thin one) between the covering and the pipe, will afford considerable protection against heat losses. Most pipe coverings owe their value to the air cells they contain.

115. Convection.—If a kettle of water be placed over a hot fire, the water soon becomes heated and, later, boils. The water is heated *all the way through,* and the entire contents of the kettle have the same temperature, practically speaking. Very little of the heat imparted to the water is due to conduction, since if all the heat were due to this cause, it would take a very long time to raise all the water to the boiling point. What happens is this: The particles in contact with the heated surface are themselves heated, which causes them to expand; their density decreases owing to the increase in volume, and they rise to the top, colder and denser particles taking their place. There is thus created a circulation of water particles, the colder ones constantly taking the place of the warmer ones until they are all at practically the same temperature. This process is called **convection.** It is evident that convection can take place only in fluids, (liquids or gases). Without convection, the only way that a fluid could be heated throughout in a reasonable time would be by constantly stirring or otherwise agitating it.

116. Radiation.—If one approaches a hot stove, or any hot body, a feeling of warmth is felt, which becomes the more intense the closer the body is brought to the source of heat. This feeling of warmth is not due to the heating of the surrounding air, because if a screen of some kind, a sheet, board, metal plate, etc., be placed between the body and the hot stove, the sensation

of warmth immediately disappears. Heat is thus transmitted or propagated through an intervening space from one object to another without heating appreciably the air between them. This method of transmitting heat is called **radiation,** and the heat thus transmitted is called **radiant heat.** All the heat received from the sun is radiant heat, the intervening space is about 93,000,000 miles, and the question is, how is this heat transmitted? The answer to this question is a direct conclusion from the modern theory of heat.

117. Dynamical Theory of Heat.—The modern dynamical theory of heat is embodied in the following statement from Ganot's Physics:

"A hot body is one whose molecules are in a state of vibration. The higher the temperature of a body the more rapid are these vibrations, and a diminution in temperature is but a diminished rapidity of the vibrations of the molecules. The propagation of heat through a bar is due to a gradual communication of this vibratory motion from the heated part to the rest of the bar. A good conductor is one which readily takes up and transmits the vibratory motion from molecule to molecule, while a poor conductor is one which takes up and transmits the motion with difficulty. But even through the best of the conductors, the propagation of this motion is comparatively slow. How, then, can be explained the instantaneous perception of heat when a screen is removed from a fire or when a cloud drifts from the face of the sun? In this case, the heat passes from one body to another without affecting the temperature of the medium which transmits it. In order to explain these phenomena, it is imagined that all space, the space between the planets and the stars, as well as the interstices in the hardest crystals and the heaviest metal—in short, matter of any kind—is permeated by a medium having the properties of matter of infinite tenuity, called **ether.** The molecules of a heated body, being in a state of intensely rapid vibration, communicate their motion to the ether around them, throwing it into a system of waves which travel through space and pass from one body to another with the velocity of light [about 186,400 miles per second]. When the undulations of the ether reach a given body, the motion is given up to the molecules of that body, which, in their turn, begin to vibrate; that is the body becomes heated. This process of this motion through the

ether is termed radiation, and what is called a ray of heat is merely one series of waves moving in a given direction."

118. Laws Governing Radiation of Heat.—As the result of experiments, the following laws have been found to apply to heat radiation:

The intensity of heat radiated from a given source varies (*a*) as the temperature of the source; (*b*) inversely as the square of the distance from the source; (*c*) grows less the greater the angle between the heat rays and a perpendicular to the surface heated.

The first statement is to be expected. The second law follows from the fact that if *S*, Fig. 23 (*a*), be a source of heat, and *ABCD* and *abcd* are parallel flat surfaces whose perpendicular distances from *S* are *OS* and *oS*, the solid formed by the rays drawn to the vertices is a pyramid, and from mensuration, area of *abcd* : area of $ABCD = oS^2 : OS^2$. But, the *intensity* of the heat on *abcd* is greater than on *ABCD*, since its area is less; and the intensities on the two surfaces is inversely as their areas, which confirms the law.

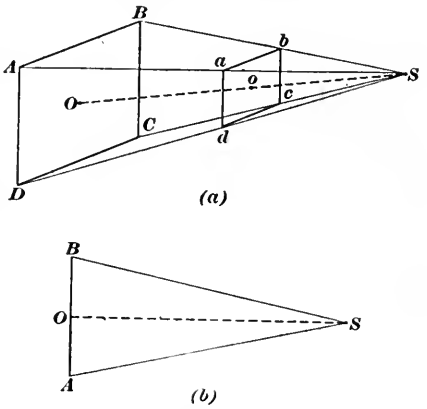

FIG. 23.

Regarding the third law, let *S*, Fig. 23 (*b*), be the source of heat and *AB* a flat surface, *SO* being a perpendicular from *S* to *AB*. Evidently, any heat ray from *S* to *AB* that is not perpendicular to *AB* is longer than *OS*; the greater the angle *OSA* or *OSB* the longer will be the line *AS* or *BS*, and the greater the area heated by the ray. Hence, the intensity of the heat at *A* or *B* will be less than at *O*.

Radiant heat is transmitted through a vacuum, because, according to theory, the vacuum contains ether, which transmits the vibratory motion.

119. If two bodies having different temperatures are placed in a closed space, both bodies radiate heat energy; but the hotter body radiates more energy than the colder body, with the result that after a time both bodies will have the same temperature, since the

colder body will absorb more heat than the hotter body. Even after both have reached the same temperature, there will still be an interchange of heat energy between the two bodies.

It is clear that the better conductor of heat a body is the more heat it will radiate. In the case of an uncovered steam pipe, the heat passes from the inner surface to the outer by conduction and then leaves the pipe by radiation. Therefore, unless this result is desired, as in a steam- or hot-water heating plant, the pipe should be covered with a non-conducting material, to keep the heat in the pipe.

The amount of heat radiated depends upon the area of the surface radiating the heat and upon the material of which it is composed. Bright surfaces radiate more heat than dull ones and white surfaces more than black. Similarly, those surfaces that radiate the most heat absorb the least; it is for this reason that light colored clothes are worn in the summer and dark colored ones in the winter. Even if the clothes are made of the same material and have the same weight, dark colored clothes are warmer than light colored ones.

EXAMPLES

(1) How many heat units are equivalent to 1,980,000 foot-pounds of work? *Ans.* 2545 B.t.u., nearly.

(2) How many calories are equivalent to (*a*) 2,655,229 foot-pounds of work? (*b*) to 1,980,000 foot-pounds of work? *Ans.* { 860.0 cal. / 641.3 cal.

(3) A piece of iron having a temperature of 1040°F. is placed in a copper vessel weighing 2 lb. 2 oz. and containing 12 lb. 4 oz. of water. The weight of the iron (wrought iron) is 1 lb. 6 oz. and the temperature of the water and vessel is 88°. Assuming that there is no loss by radiation, what is the temperature of the mixture? *Ans.* 101.16°F., nearly.

(4) A number of steel rails are welded together until their length is 3000 ft.; what will be the difference in length between summer and winter, if the range of temperature is from 110°F. to −10°F.? *Ans.* 15.5 in., nearly.

(5) An aluminum vessel when filled to a certain mark holds exactly 1 U. S. gal. (231 cu. in.) at 62°F.; how much will it hold at 32°F.? *Ans.* 230.742 cu. in., nearly.

(6) To find the temperature of the hot gases escaping from a blast furnace, a platinum ball weighing ½ lb. is placed in them; it is then placed in a brass vessel weighing 10 oz. and containing 3 lb. of water at a temperature of 60°F. The temperature of the mixture being 72.4°F., what is the temperature of the gases? *Ans.* 2404°, say 2400°F.

CHANGE OF STATE

120. Latent Heat of Fusion.—Suppose a piece of ice weighing 1 pound and having the form of a right cylinder with a circular base be placed in a cylindrical vessel of the same diameter; suppose further that the temperature of the ice is 32°F. and that the pressure of the atmosphere is 14.7 lb. per sq. in. If heat be applied to the vessel, the ice will gradually melt and become water. But, so long as there is any ice left, the temperature does not change; it remains at 32°. What becomes of the heat? The ice does not expand; in fact, after it is all melted, the volume occupied by the water is *less* than the original volume of the ice. According to the dynamical theory of heat, the effect of applying the heat to the ice was to overcome the attraction of cohesion to such an extent that the solid became a liquid. This heat is called **latent heat;** it cannot be measured with a thermometer. The heat that affects the thermometer is called **sensible heat,** because it is apparent to the senses.

As the result of carefully conducted experiments, it has been found that it requires 144 B.t.u. of heat to change 1 pound of ice at 32° to water at 32°, the pressure being 14.7 lb. per sq. in. It has also been experimentally demonstrated that before water at 32° can be changed into ice, 144 B.t.u. of heat must be removed from every lb., the pressure being 14.7 lb. per sq. in. This value, 144 B.t.u., is called the **latent heat of fusion** of ice.

The foregoing explains why water freezes (changes to ice) so slowly; it is necessary to remove a large amount of heat before the liquid can become a solid. It also explains why ice floats in the water in which it was formed; since the water expands in freezing, the density of the ice is less than water, thus causing the ice to float. Moreover, after the ice has become liquid (water), the water continues to contract in volume—become denser—until a temperature of 39° is reached; hence, the ice floats highest when the temperature of the water is 39°F.; this temperature is called the *temperature of maximum density.*

The student will understand that heat values can be expressed in metric units (calories) by using grams, centimeters and degrees centigrade. The conversion of B.t.u. to calories, and vice versa, is explained in Art. **101.**

121. Latent Heat of Vaporization.—Assuming that the temperature is 39° F. and that the pressure is kept constant at 14.7

lb. per sq. in., further application of heat causes the temperature of the water to rise and also causes the water to expand slightly, thus increasing its specific volume and decreasing its density. This action continues until a temperature of 212°F. is reached, when, if the pressure still remains the same, the water begins to vaporize, the temperature remaining 212° until all the water has been converted into vapor (steam). There is, however, a great increase in volume. The heat required to change the water into steam of the same temperature and pressure is called the **latent heat of vaporization,** and when the pressure is 14.7 lb. per sq. in., the temperature is 212°, and the number of heat units required is 970.4 B.t.u. per pound of water. When steam condenses and becomes water at this temperature, the same number of B.t.u. is given off or must be removed from the steam. Consequently, if 1 pound of ice and 5 pounds of water at 32° are mixed with 1 pound of steam at 212°, the pressure being 14.7 lb. per sq. in., the temperature of the mixture may be found approximately as follows: When the steam condenses, it gives up 970.4 heat units, which go to heat the water and ice, and becomes 1 pound of water at 212°. When the ice melts, it takes 144 heat units to change it into 1 pound of water at 32°, and this must be subtracted from the heat units in the mixture. The mixture thus consists of $1 + 5 = 6$ pounds of water at 32°, 1 pound of water at 212°, 970.4 B.t.u., and 144 negative B.t.u., the total weight of the mixture being $6 + 1 = 7$ pounds. The temperature is therefore $\frac{6 \times 32 + 1 \times 212 + 970.4 - 144}{7}$ $= 175.8°$. The result is approximate, because it has been assumed that the specific heat of water is constant and equal to 1; but, as before stated, the specific heat of water varies. However, the result as found is not far out of the way, and the illustration serves to show how the latent heats enter into problems of this nature, such as calculating the amount of steam required to raise the temperature of liquids in a mill.

Temperature		State	Specific volume
−10°C.	= 14°F.	Ice	1.0897
0°	= 32°	Ice	1.0909
0°	= 32°	Water	1.0001
4°	= 39.2°	Water	1.0000
50°	= 122°	Water	1.0120
100°	= 212°	Water	1.0431
100°	= 212°	Steam	26.79
150°	= 302°	Steam	30.38

122. The small table given herewith affords some idea of how the specific volume varies with the temperature. The volume of 1 pound of water at 4°C.

= 39.2°F. being taken as 1, the volume at 212° will be 1.0431 and the volume of 1 pound of steam at 212° will be 26.79 cu. ft. the pressure being constant and equal to 14.7 lb. per sq. in. For instance, the weight of a cubic foot of water at 39°F. is 62.4 pounds, and the actual specific volume (volume of one pound) is $\frac{1}{62.4} = .016026$ cu. ft. Hence, $26.79 \div .016026 = 1672$ cu. ft. = the occupied by steam formed from 1 cu. ft. of water at 39.2°F., the pressure of both water and steam being 14.7 lb. per sq. in. and the temperature of both 212°F. This shows the enormous expansion of water when converted to steam.

123. Any vapor in contact with the liquid from which it is formed or having the same temperature and pressure that it had when it was formed is said to be **saturated,** if, in addition, it has no particles of the liquid entrained in it (mixed with it), it is said to be **dry,** and is then spoken of as *dry and saturated.* If heat be applied to a vapor that is dry and saturated, its temperature will increase; its volume will also increase, or if not allowed to increase, its pressure will increase, and the vapor is then said to be **superheated.** If superheated sufficiently, the vapor will exhibit all the characteristics of a perfect gas.

If steam (or vapor) that is dry and saturated be subjected to any additional pressure, it immediately begins to condense; or, if the pressure is decreased, it is superheated. In other words, for any particular pressure, there is only one temperature for which the steam will be saturated.

124. There is no simple formula showing the relation between the temperature and pressure of saturated steam, but the two following formulas, in which t = temperature and p = pressure, will give values accurate enough for all practical purposes:

Between 10 and 250 lb. per sq. in. abs. (abs. means absolute),

$$t = 241.5 - \frac{601.5}{p} + 1.214p - .003385p^2 + .00000448p^3 \quad (1)$$

For pressures between 1 lb. and 15 lb. per sq. in., abs.,

$$t = 121.42 - \frac{30.93}{p} + 11.892p - .5656p^2 + .0126p^3 \quad (2)$$

Thus, for $p = 10$ lb. per sq. in. abs., formula (1) gives

$$= 241.5 - \frac{601.5}{10} + 1.214 \times 10 - .003385 \times 10^2 + .00000448 \times 10^3 = 193.2°$$

For $p = 250$ lb. per sq. in. abs., formula (1) gives

$$t = 241.5 - \frac{601.5}{250} + 1.214 \times 250 - .003385 \times 250^2 + .00000448 \times 250^3 = 401.1°$$

The temperatures thus obtained are the ordinary temperatures as recorded on a Fahrenheit thermometer.

125. What is called the **total heat of steam** is the number of heat units contained in one pound between the temperatures of 32° and the temperature of the steam; it is equal to the number of heat units in the liquid, called the heat **of the liquid,** plus the **latent heat of vaporization.** Letting H = total **heat,** the following formulas will give the total heat accurately between $p = 14.7$ and $p = 260$ lb. per sq. in. abs., and may be used up to 300 lb. per sq. in. abs.:

$$H = 1175.1 - \frac{405.8}{p} + .178p - .000264p^2 \qquad (1)$$

For pressures less than 14.7 lb. per sq. in. abs., use the following formula:

$$H = 1119.7 - \frac{18.48}{p} + 3.28p - .0754p^2 \qquad (2)$$

For example, the total heat in one pound of dry and saturated steam when the pressure is 100 lb. per sq. in abs. is, by formula (1),

$$H = 1175.1 - \frac{405.9}{100} + .178 \times 100 - .000264 \times 100^2 = 1186.2 \text{ B.t.u.}$$

This result, 1186 B.t.u. is the number of heat units that would be given up if 1 pound of dry and saturated steam under a pressure of 100 lb. per sq. in. abs. were condensed to water and the water were cooled to 32°; it is also the number of heat units that would be required to change 1 pound of water at 32° into 1 pound of dry and saturated steam at a pressure of 100 lb. per sq. in. abs.

126. In Art. **124,** the temperature of saturated steam when the pressure is 10 lb. per sq. in. was found to be 193.2°F.; this is the boiling point of water for that temperature. In other words, when the pressure is 10 pounds per sq. in., the boiling point is 193.2° instead of 212°, the boiling point when the pressure is 14.7 pounds per sq. in. The boiling point, therefore, depends upon the pressure, and this explains why liquids boil at a lower

temperature in a partial vacuum. It also explains why a kettle of water boils aways so much faster when the barometer is low, just before a storm, than when it is normal, when the weather is fair. When the pressure is 100 lb. per sq. in., the boiling point of water, calculated as above, is 327.8°.

Pressure abs.	Boiling point
1	101.8°
2	126.2
3	141.5
4	153.0
5	162.3
6	170.1
7	176.9
8	182.9
9	188.3
10	193.2

The little table given in the margin shows the temperature at which water boils corresponding to the pressure in pounds per square inch given in the first column. For higher pressures up to 250 lb. per sq. in., the boiling points may be found by substituting the pressure in the formulas (1) or (2) of Art. **124.** It is to be noted that the temperature of saturated steam is the same as the boiling point of water for the same pressure; this follows from the definition of saturated steam.

127. In the case of a partial vacuum, let i = inches of vacuum, as shown by the gauge; then the pressure in inches of mercury (the tension) is $29.921 - i$. The temperature in degrees Fahrenheit and the pressure in pounds per square inch of dry and saturated steam in a partial vacuum may be calculated by the following formulas up to 28 inches of vacuum, letting $m = 29.921 - i$;

$$t = 121.4 - \frac{63}{m} + 5.84m - .1364m^2 + .00149m^3 \qquad (1)$$

$$H = 1119.7 - \frac{37.63}{m} + 1.611m - .01818m^2 \qquad (2)$$

For example, if the vacuum gauge indicates 22 in., the temperature of the steam is, since $m = 29.921 - 22 = 7.921$,

$$t = 121.4 - \frac{63}{7.921} + 5.84 \times 7.921 - .1364 \times 7.921^2 + .00149 \times 7.921^3 = 152°\text{F.}$$

and the total heat of the steam is

$$H = 1119.7 - \frac{37.63}{7.921} + 1.611 \times 7.921 - .01818 \times 7.921^2 = 1126.6 \text{ B.t.u.}$$

128. Melting and Boiling Points of Some Substance.—Every known substance can probably occupy all the three states of matter; if it is a gas, it can be liquified and then frozen (solidified); if a liquid, it can be frozen or vaporized; if a solid, it can be liquified (melted) and then vaporized. It is, of course, understood

that all substances have not been made to occupy all three states; it is only recently that certain solids have been liquified, and not all of them have been vaporized. The following table gives the

	Fusion point °F.	Boiling point °F.
Alcohol, absolute (liquid)	−170	173
Ammonia (gas)	−104	−28
Aluminum (solid)	1217	
Carbon (solid)		6300
Copper (solid)	1980	4190
Carbon Dioxide (gas)	−110	
Gold (solid)	1944	
Helium (gas)		−450
Hydrogen (gas)		−423
Iridium (solid)	4172	
Iron (solid)	2740	
Lead (solid)	620	2777
Mercury (liquid)	−38	675
Nitrogen (gas)		−231
Osmium (solid)	3992	
Oxygen (gas)		−182
Platinum (solid)	3191	
Sea Water (liquid)	28	
Silver (solid)	1760	3550
Tantalum	5240	
Tin (solid)	450	4118
Tungsten (solid)	5430	
Turpentine (liquid)	14	
Water, pure (liquid)	32	212
Zinc (solid)	786	1684

fusion point or boiling point or both of a number of well-known substances, the ordinary state of each substance being given in parenthesis. It is to be noted that the fusion point is the temperature (Fahrenheit) at which the substance changes from a solid to a liquid (melts) or from a liquid to a solid (freezes), and the boiling point is the temperature at which a liquid changes to a gas (vaporizes) or a gas changes to a liquid (liquefies). In the case of carbon, there is apparently no liquid state, it changing directly from the solid to a gas, but the gas has never been isolated and examined, the temperature being too high.

129. Humidity.—There is always a certain amount of water vapor present in atmospheric air, and the pressure of this vapor is usually different from that of the air. For any particular tem-

perature of the air, there is a pressure for which the water vapor will be saturated; that is, any increase in pressure or any decrease in temperature (however small) will cause the vapor to condense. In general, the water vapor is in a superheated state, its pressure being less than that required for saturation. Let w be the weight of the vapor per cubic foot when the temperature of the air is t, and let w' be the weight per cubic foot at the same temperature when the vapor is saturated; then w' will be greater than w, and the ratio $\frac{w}{w'}$ is called the **relative humidity,** which has different values for different temperatures and pressures.

Suppose that for some particular state of the atmosphere the temperature is t and the barometric pressure is b, and let w be the weight per cubic foot of the water vapor. If the air be cooled, both the temperature and pressure will fall; the water vapor also cools and after a time, it will reach its saturation temperature t' and saturation pressure b'; this temperature is called the **dew point** *corresponding to the temperature t and pressure b.* Hot air absorbs a greater amount of moisture than cold air, which explains the heavy dews of summer. During the night, the air cools until the dew point is reached, and any further cooling causes the water vapor to condense and fall as dew.

130. The relation of humidity to health and comfort is of extreme importance. Hot, damp days are oppressive and seem hotter than they really are because the relative humidity is so high, the vapor is so near the dew point, that free evaporation of moisture from the body is interfered with; on the other hand, when the relative humidity is low, the air is dry and the evaporation of moisture from the body is too great. In houses and offices, where the temperature is kept at about 68° or 70°, the best results are obtained when the relative humidity is from 50% to 60%; if the relative humidity is less than this, it will require a higher temperature for comfort on cold days; and if it is much less, the result will be apparent by the widening of cracks in floors (if of wood), the loosening of the furniture, etc., and it will also have a bad effect on the health.

In drying paper and pulp, the relative humidity in the dry loft or machine room is an important factor, since the rate at which the air takes moisture from the stock becomes slower as the moisture already in the air increases; on the other hand, the amount of moisture in stored paper varies with the moisture

in the air, and the quality is likewise affected by this factor. A well insulated roof and an interior temperature above the dew point of the moisture-laden air is required to prevent condensation in the loft or machine room.

131. Foaming and Surface Tension.—If a fine needle be placed on the free surface of a liquid, care being taken to have its axis parallel to the plane of the free surface and to lay it gently on the surface, the needle will float, and this despite the fact that the density of the needle is from to 6 to 8 times that of the liquid. Small, dust-like particles of any kind, though many times as dense as the liquid, will float provided they come into contact with the liquid without the exertion of a downward force that is greater than that due to gravity. But if the needle or the particles are at any time entirely submerged, they will sink, if of greater density than the liquid. This phenomenon is due to what is called **surface tension,** which is very closely related to capillarity, and is explained as follows:

The molecules (and particles) of a liquid attract one another, with the result that they tend to form compact masses; this attraction takes place in all directions, and when the masses are small, they tend to form little spheres, thus reducing the free surface to a minimum, a sphere having the smallest surface for a given volume. Thus, if a match be dipped in a liquid and then held up so the liquid can run down to one end, a round drop will form, and if the drop falls, it has the shape of a perfect sphere. The size of the drop will depend upon the cross-sectional area of the end of the match or stick and upon the viscosity of the liquid. **Viscosity** may be defined as the state of fluidity; it may also be thought of as internal friction. For instance, if a thin, flat plate be drawn through a liquid in a direction parallel to the plane of its flat surface, the force required to pull the plate is a measure of the viscosity of the liquid; it will evidently require a greater force to pull the plate through molasses than through water; hence, molasses is more viscous—has greater viscosity—than water.

Now when the upper surface of a liquid is free, there is no attraction from above, but the molecules in the immediate neighborhood below the surface of the liquid tend to pull downward. There are also other forces pulling the surface molecules and tending to bring them as close together as possible; that is, so that the area of the exposed surface will be as small as possible. This

causes the free surface to behave as though an elastic skin were drawn tightly over it, and it creates the surface tension mentioned above.

132. When a liquid is violently agitated, as by rapid stirring, by the use of an egg beater, by heating, etc., bubbles form on the free surface; this phenomenon is called **foaming.** The bubbles are due to surface tension, which enables them to keep their form. The amount and quality of the foam that forms on any liquid depends upon its composition, viscosity, and temperature. The presence of impurities will freqently cause the liquid to foam more readily than when pure. When pure water is boiled, bubbles form on the free surface, but they do not last, collapsing almost as soon as they form; the same thing happens when water is violently agitated with an egg beater. If, however, the water is not pure, but contains other substances in solution, making it more viscous, the bubbles will be larger and will retain their form longer; in fact, they may retain their form until they collapse from evaporation as in the case of soap suds, etc. Such bubbles are commonly called **froth.**

133. In paper mills, the froth on top of a liquid is sometimes but the dried mechanical structure of evaporated films, which, upon examination, will be found to be superimposed layers of more or less dried clay, rosin, calcium resinate, fibers and other solids, all of which act to form a structure for fresh bubbles to adhere to and prevent the bubbles proper from breaking. If this structure is allowed to accumulate, it may sink, mix with the pulp mixture or the paper stock, and show up as dirty spots in the product. A spray of water is sometimes effective in breaking up this structure, but it is advisable in most cases to skim it off and then endeavor to prevent its formation by one or more of the following methods:

(*a*) By spraying the surface (if it has a tendency to foam) with a fine needle spray of pure or clean water, thus breaking the bubbles before they attain any great size.

(*b*) By adding some solution to the liquid that will increase its surface tension, thus preventing it from breaking up into air bubbles.

(*c*) By adding clean water to the mixture.

(*d*) By lowering the temperature of the liquid and increasing the temperature of the air in the neighborhood of the liquid.

(*e*) By mechanical removal of the froth as soon as formed by the use of a skimming device.

In actual practice, it has been found in some mills that when the temperature of the water used on the screens is lower than 25°C. (77° F.), there is less foaming than when the water is above this temperature.

134. In the case of steam boilers, what is called **priming** occurs when water bubbles are carried over with the steam. Considerable water may thus be added to the steam, thus making it no longer dry, and serious results may follow. A relatively large amount of water may thus accumulate in the cylinder of the engine or turbine, and the swiftly moving piston or blades may strike this, causing the cylinder to burst, since water is practically incompressible. Priming is usually due to impurities, which may be contained in the feed water or may be added to it by too liberal use of boiler compounds, added to prevent incrustation. When feed water that is known to foam must be used, an analysis should be made of the water to determine what impurities are present; it is then frequently possible to add some chemical that will neutralize these impurities before the water is fed into the boilers. Priming may sometimes be overcome by changing the water frequently in the boilers, by blowing them down and filling them up with fresh water, or by adding some water glass (sodium silicate), which increases the surface tension.

LIGHT

RADIANT ENERGY

135. Nature of Light.—An explanation of the dynamical theory of heat was given in Art. **117,** and it was there stated that heat was propagated by reason of vibratory motions set up in the ether, which pervades all space and all bodies. This vibratory motion results in a series of waves, somewhat like those which are formed when a stone is thrown into a pond when the water is still. The particles of water move up and down, communicate their movement to the adjacent particles, and the wave moves outward from where the stone entered the water. Note that it is the *particles of water* that move up and down and that it is the *wave form* that moves outward; the water particles all return to the

place from which they started. This is practically what takes place in the ether, the ether particles moving transversely to (across) the direction of the wave movement. If a plane section be taken through a wave of this kind, the result will be something like the curve in Fig. 24, in which the parts $AaB = BbC = CcD$ = etc. and AaB is symmetrical to BbC with respect to the point B, BbC is symmetrical to CcD with respect to the point C, etc. The distance between any two corresponding points on two symmetrical parts of the curve, as $AC = ac = bd$ = etc. is called a **wave length,** here designated by l. The highest points, b, d, etc., are called **crests,** and the lowest points c, e, etc., are called **troughs.** The perpendicular distance between a crest and a trough, here designated by h, is called the **amplitude** of the wave.

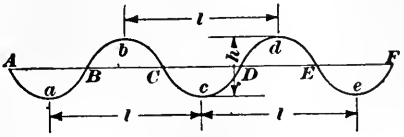

FIG. 24.

136. All radiant energy is propagated (transmitted) in the form of waves. Heat and light are both forms of radiant energy, the sole difference between them being in the length of the waves; if the waves are too long, they produce only the sensation of heat, and if they are too short, produce neither the sensation of heat nor light, but will produce chemical effects and are then called **actinic rays.** Actinic rays will affect the photographic plate.

137. Bodies that act as a source of light, that is, which are able to produce vibrations in the ether of such a nature as to make them visible, are called **luminous** bodies; as a piece of red hot iron, a candle flame, an incandescent electric lamp, etc. Such bodies are said to **emit** light. Some luminous bodies can be seen to emit light only in the dark or in semi-darkness; this is because the light of day is so much stronger that it overpowers the light from the luminous body; thus, the light of a lightning bug, of a piece of wet phosphorous, the light of the stars, etc. cannot be perceived in full daylight. Bodies that do not emit light and can be seen only by light that is reflected from a luminous body are called **non-luminous.** Most bodies are non-luminous under ordinary conditions.

A **ray** of light is the line along which light is propagated; rays issue from the source of light in all directions, and if the medium through which they pass is uniform in its structure, every ray of

light is a straight line. A collection of parallel rays make up a **beam** of light; but if the rays are not parallel, either converging toward or diverging from a point, they form a **cone** or **pencil.**

When light passes through any substance whatever, a solid, a liquid, or a gas, the substance is called a **medium.** If light rays pass freely through the medium, so that objects are clearly seen when looking through it, the medium is **transparent;** clear water, air, ordinary window glass, glassine paper, certain crystals, etc. are transparent. If objects are only faintly seen through the medium, it is said to be **semi-transparent;** smoked glass, a foggy atmosphere, slightly muddy water, etc. are semi-transparent. If light can be seen through the substance, but the form of objects cannot be distinguished, the medium is called **translucent;** ground glass, colored glass, certain crystals, etc. are translucent. Substances which allow no light to pass through them are called **opaque;** a piece of iron, a stone, a stick of wood, heavy cardboard, etc. are opaque mediums. However, if any substance be cut in sufficiently thin slices or rolled sufficiently thin, it will be more or less translucent. Opacity is a desirable quality in printing papers.

When the medium is transparent, all the light that strikes it goes through it; but when the medium is translucent, some of the rays are absorbed and the remainder go through, those that are absorbed being transformed into heat. Thus, a clean, plate-glass window exposed to the sun in the summer will be cool; but if it be covered with paint or varnish or the surface be roughened, some of the light rays will be absorbed and the glass will become warm—it may even become hot. In the case of opaque substances, all the light rays striking it are transformed into heat.

138. Light Rays are Right Lines.—It was stated in the last article that every ray of light is a right line, provided the medium through which it passes is uniform; thus, a ray of light going through a clear atmosphere, clear water, glass, etc. will be straight; but, as will be explained later, it will not be straight throughout its length, if it passes through two or more different mediums. That the rays are right lines is easily proved by the fact that a person can see through a straight tube, but cannot see through it if it is bent. So long as the medium is uniform the rays are straight; but if a ray passes through several mediums, it will be a broken line, that part of the ray through each medium being straight. A ray can never be a curved line.

139. Velocity of Light.—The speed of light is so great that it is difficult to measure it with any great degree of exactness. However, the velocity has been determined in a number of different ways, the most probable value being 186,400 miles per second. This is equivalent to 300,000 kilometers = 3×10^{10} centimeters per second, the latter value being very easy to remember. An object moving at this speed would be able to go around the earth about $7\frac{1}{2}$ times in one second. The distance from the earth to the sun is about 93,000,000 miles; consequently, light received from the sun requires 93000000 ÷ 186400 = 499 seconds = 8 min. 19 sec. to reach the earth; in other words, the sun has risen above the horizon 8 min. 19 sec. before it is seen, and it is seen for 8 min. 19 sec. after it has set. Anything that happens on the sun cannot be seen until 8 min. 19 sec. after it has occurred. The fixed stars are so far away that it takes over 3 years to reach the earth from the nearest one, and some are so distant that it takes light thousands of years to reach the earth.

SHADOWS

140. Shadows Cast by a Luminous Point.—If a luminous body be very small, so that for practical purposes it may be considered to be a point, it is called a **radiant.** Hence, any

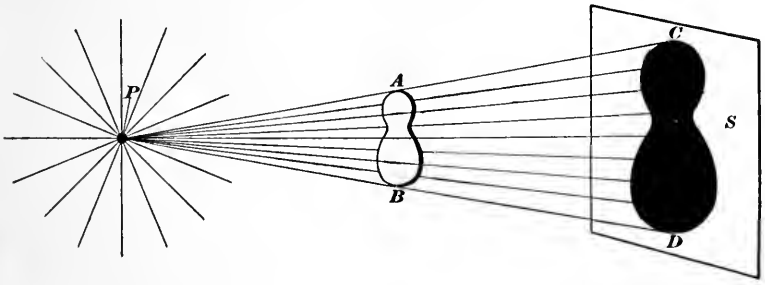

Fig. 25.

luminous body may be considered as a collection of radiants distributed over its surface. In Fig. 25, let P be a radiant and S a flat, opaque, white screen having a smooth dull surface that will not reflect light. Let AB be a flat, opaque plate of irregular outline, situated between P and S. Rays of light from P shoot out in straight lines in all directions—upwards, downwards,

sideways, forwards, and backwards—and illuminate the screen S. The rays, however, cannot pass through the plate AB, and the result is that there is a dark spot CD on the screen, which is called the **shadow** of AB. The outline of the shadow is of the same form as that of the object AB; it is really a projection of AB on the screen formed by drawing right lines from the point P, touching the perimeter of AB and intersecting the surface of the screen. These lines form a pencil (Art. **137**) of rays, and any ray included within the bounding surface of this pencil is stopped by the object and does not strike the screen. This is another proof of the fact that the rays of light are straight. The outline of a shadow formed by light proceeding from a single radiant is sharp and distinct.

141. Shadows Cast by a Luminous Body.—If the shadow is cast by a luminous body instead of a single radiant, a somewhat different result is obtained. Referring to Fig. 26, suppose XY to

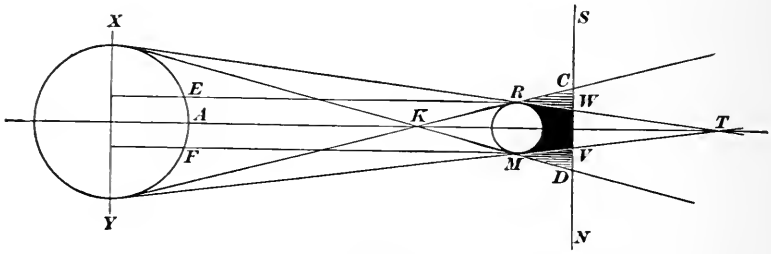

Fig. 26.

be a luminous sphere, RM an opaque sphere, and let SN be the edge of a screen; then, if XR and YM are tangents to the two spheres, all radiants on the surface XAY emit rays of light that touch the object RM; but all other radiants on the sphere XY emit rays that do not touch RM. Considering the radiant X, it forms a pencil RXM, which results in the shadow WD on the screen; the radiant Y forms the pencil MYR, which results in the shadow VC; the total shadow cast by these two radiants is CD. But, the part WC is illuminated with more or less intensity by radiants situated between X and Y, the shadow becoming lighter and lighter as the distance from W toward C increases, since rays from a greater number of radiants strike the part WC of the screen above the line ER than below it, radiants situated between E and Y also striking this part of the screen. The same

thing occurs in connection with the part VD of the shadow, and as a consequence, the edges C and D are very faint and indistinct. The part between W and V is not illumined by rays from any radiant; this part is equally dark throughout and is called the **umbra.** The part outside of the umbra, represented by WC and VD graduates from the color of the umbra to full illumination, and is called the **penumbra.** The case just described fulfills all the conditions of a total eclipse of the sun. Here XY is the sun, RM is the moon, and the screen SN is the earth. Persons in the umbra witness a total eclipse; those in the penumbra, see only a partial eclipse.

142. Brightness and Intensity.—The brightness of a light does not depend upon the size or shape of the luminous body, just as the density of a substance does not depend upon the size or shape of the body. A pin point of light may be just as bright as a powerful search light. The brighter the light the darker will be the shadow it casts, since the illuminated part around the shadow will then be brighter and there will be a greater contrast between the shadow and the illuminated portion of the screen. The **intensity** of a light however, depends upon the brightness of the radiants, their number (and, consequently, the area of the surface emitting the rays), and the distance of the object illuminated from the source of light. In fact, the intensity of light, like the intensity of heat or any other form of radiant energy, varies inversely as the square of the distance. The proof of this is exactly the same as was given in the case of heat, Art. **118.**

143. Candlepower.—The common standard for the intensity of light is **one candlepower,** which is the amount of light emitted by a sperm candle $\frac{7}{8}$ inch in diameter when burning at the rate of 120 grains per hour. This is called a **standard candle.** If, therefore, a standard candle illuminates a certain object 3 ft. distant with the same intensity as another source of light situated 12 feet distant, then, the candlepower of the standard candle being 1, let c be the candlepower of the other light. According to the the law of the last article, c may be found from the proportion

$$c : 1 = 12^2 : 3^2, \text{ or } c = \frac{144}{9} = 16 \text{ candlepower.}$$

It is to be remembered that the proportion is an inverse one.

144. Photometers.—A photometer is an apparatus for measuring the relative intensities of light. Photometers are made in

various forms, two of which will be described here, as they make use of two different principles.

(*a*) **Rumford's Method.**—Referring to Fig. 27, T is a horizontal, flat surface on which is erected a vertical, flat, white screen S. R is an opaque rod, C is a standard candle or other source of light whose intensity is known, and L is a light whose intensity or relative intensity as compared with C is to be measured, say an incandescent electric lamp. C casts a shadow of the stick or rod R at a, which is illuminated by the light from L, and L casts

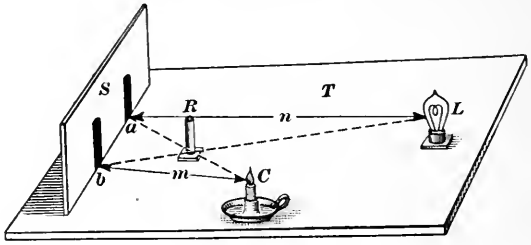

FIG. 27.

a shadow of the rod R at b, which is illuminated by the light from the candle C. By moving C back and forth along the line Ca, it will be found that there is one point for which the two shadows will be of the same distinctness; suppose this to be the point C in the figure. Measure the distances $Cb = m$ and $La = n$; then, if the intensity of the candle be represented by C and of the lamp by L,

$$L : C = n^2 : m^2, \text{ or } L = \frac{n^2}{m^2} C$$

If C is 1 candle power, then $L = \frac{n^2}{m^2}$ candlepower. In other words, *when two sources of light illuminate an object with the* **same** *intensity, these candlepowers are* **directly** *proportional to the squares of their distances from the object.*

(*b*) **Bunsen's Method.**—The essential part of a Bunsen photometer is a disc of unglazed paper having a round grease spot in the center, thus making the paper translucent at this spot. The disc B, Fig. 28, is held in an adjustable holder, which can be moved along a graduated scale S. A standard candle C or other source of illumination whose intensity is known is placed on one side of the disc, and an electric lamp L or other light whose intensity it is desired to find is placed on the other side. If the lamp

be turned out and the candle be left burning, the side of the grease spot nearest the candle will be lighter than the other side. If, therefore, both lights are going, that side of the grease spot will be the darker which is turned toward the light of less intensity. By moving the holder B along the scale, a point will be found at

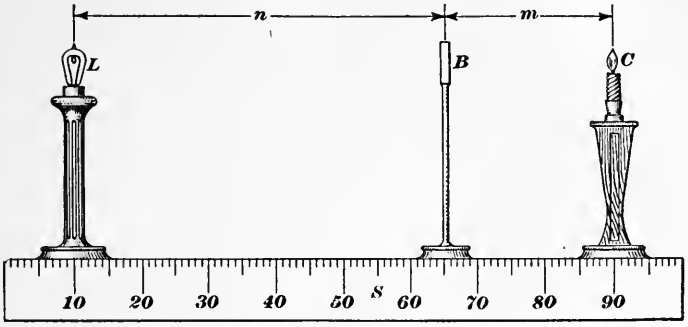

FIG. 28.

which both sides of the spot are illuminated equally. Then measuring the distances m and n between the disc and C and L, respectively,

$$L = \frac{n^2}{m^2} C$$

the same result as was obtained by Rumfords' method.

REFLECTION OF LIGHT

145. Reflection from Plane Surfaces.—Let P, Fig. 29, be a polished plane surface, as a mirror, polished steel, etc., and let C be a radiant. Suppose a ray of light from C to strike the surface P at A; instead of being absorbed, the light will be reflected at A along the line AE, and if the eye is situated at G, the reflected ray will enter it. Pass a plane through A and C perpendicular to plane P; it will be found that the reflected ray AE lies in this plane, and a perpendicular $P'A$ at A also lies in this plane. The angle CAP' is called the **angle of incidence,** and the angle $P'AE$ is called the **angle of reflection.** It has been proved by repeated experiments and measurements that *the angle of incidence is always equal to the angle of reflection,* that is, $CAP' = P'AE$ and $P'A$ bisects the angle CAE. Hence, to draw a reflected ray from a plane surface, draw a perpendicular to the surface at the

point where the incident ray strikes it, the point A in Fig. 29; then from A draw AE so that angle $P'AE = P'AC$, and AE will be the direction of the reflected ray. For any other ray, as CB, draw a perpendicular at B, and then draw BF so that the angle included between BF and the perpendicular BP'' will equal the angle included between BC and the perpendicular.

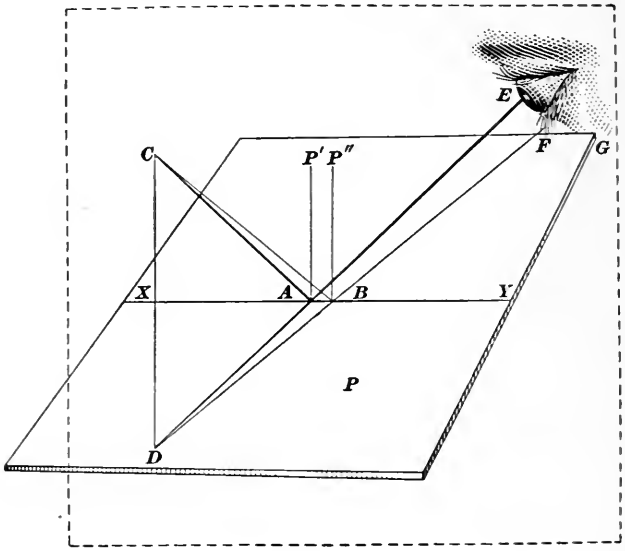

FIG. 29.

The line XY passing through the point A is the trace of the plane that includes AC and AE, and if CD be drawn perpendicular to XY it will lie in this perpendicular plane, since it will then be parallel to $P'A$. Produce EA until it intersects CD in D; then, from geometry, angle YAE = angle XAD, and since $YAE = XAC$, $XAD = XAC$, the triangle CAD is isosceles, and $CA = DA$. With the eye in the position shown, the point C will appear to be located at D; that is, the *apparent position* of the radiant, as viewed by the eye, will appear to be as far *below* the plane P as it actually lies *above* the plane P; and this will be the case no matter where the eye is situated above the plane of reflection, since the triangle formed by CD and the sides drawn from C and D will always be isosceles and the length of the base CD is not changed. This will still be true, even when the eye is directly over C and the triangle has become a right line of which

CD is part. This effect will be apparent in the reflections produced in any plane mirror; the object reflected will always appear as far back of the mirror as it actually is in front of it.

146. Reflection from Curved Surfaces.—The law of reflection for curved surfaces is the same as for plane surfaces, provided the angle of incidence and reflection are those included between the incident and reflected rays and the *normal* to the surface at the point of their intersection. A **normal** to a surface at any point is a perpendicular drawn to a tangent to the surface at that

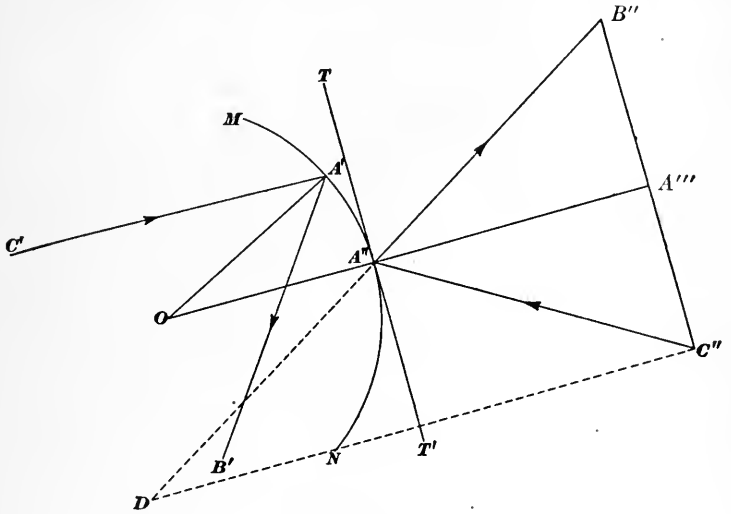

Fig. 30.

point. For instance, a radius is always normal to a circle or sphere at the point where it intersects the circle or sphere, because a tangent drawn at that point is perpendicular to the radius. For other curved surfaces, special geometrical constructions are required to draw a tangent at any particular point; but when a tangent has once been drawn, a perpendicular to the tangent at the point of tangency will be normal at that point. Having drawn a normal to the surface at the point where the incident ray strikes it, measure the angle between the incident ray and the normal, pass a plane through the lines defining the incident ray and the normal, and lay off in this plane on the other side of the normal an angle equal to the one measured; the side of this angle will have the same direction as the reflected ray and will coin-

cide with it. Thus, suppose MN, Fig. 30, to be a section of a spherical surface whose center is O; let C' be a radiant and $C'A'$ a ray. Draw OA' and it will be a normal to the surface at A'; draw $A'B'$ so it will make an angle $B'A'O$ equal to the angle $C'A'O$, and $A'B'$ will be the reflected ray when $C'A'$, OA', and $B'A'$ all lie in the same plane. Again, if C'' be a radiant and $C''A''$ a ray, draw OA''' through O and A''; it will be a normal to the surface at the point A''. Lay off $A''B''$ so angle $A'''A''B'' = A'''A''C''$, and $A''B''$ will be the reflected ray. The arrowheads indicate the direction of the incident and reflected rays. If that part of the curved surfaces facing toward A''' be polished, thus reflecting all the rays striking it, and the eye be placed anywhere along $A''B''$, the radiant C'' will appear as though located at D. To find the point D, draw TT' tangent to the surface at A'' and in the same plane as $A''B''$ and $A''C''$; draw $B''C''$ parallel to TT' and $C''D$ parallel to OA'''; produce $B''A''$ until it intersects $C''D$ in D, which is the required point.

147. Diffusion of Light.—Suppose a beam of light to strike a smooth, polished plane surface, say a plane mirror, as shown at (a), Fig. 31. The rays will all be reflected in parallel lines and will illuminate any object that they strike only to the extent of an area equal to the area of a cross-section of the beam.

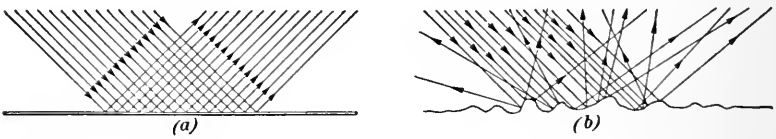

FIG. 31.

Now suppose the reflecting surface to be comparatively rough, like ground glass, unglazed white paper, etc. The incident rays will all be parallel as before, but the reflected rays will take practically every direction, as indicated in (b), with the result that every part of the object will be illuminated and, in addition, all parts of the room as well. The light is then said to be **diffused**; it will illuminate no part of the room with the same intensity as in (a), but it will be softer, less trying on the eyes, and will illuminate a far greater area. The manner in which book paper reflects light is an important consideration. Very smooth, glazed paper is trying to the eyes, especially under artificial light.

148. Visibility of Objects.—In the case of a self-luminous body, the light rays are transmitted directly to the eye, and the form of the body is sharply outlined. When a body is non-luminous, however, as is usually the case with visible objects, it can be seen only by reflected light, which is almost invariably diffused, the result being that a non-luminous body is not usually as distinct as a luminous one. The diffusing surface may be considered as made up of an extremely large number of elementary areas, each of which reflects light in all directions from a luminous source, thus making visible the outline of the body, no matter where the eye is placed within the limits of visibility. A perfectly reflecting surface or a transparent one is not visible to the eye. The water in the gauge glass of a steam boiler cannot be seen when clear; if the gauge glass is only partly full, the steam above it cannot be seen; and the only reason that the surface of the water in the glass can be seen is because of the difference in refractive powers of water and the air or steam above it. A polished reflecting surface, like a plate-glass mirror, is not visible, since the reflected rays are the same in all respects as the incident rays, and only the luminous source is seen. This is proved by the fact that if the wall of a room were made one large plane mirror, a person walking toward it will not recognize the wall until he strikes it. A black body does not reflect rays to the eye, but is made visible by rays reflected from its surroundings.

REFRACTION OF LIGHT

149. Index of Refraction.—In Fig. 32, $H'H$ represents the water level of a body of water, and AO is a light ray that strikes the water (a plane surface) at O. A part of the light is reflected along the line OA' and the rest enters the water. Now instead of continuing through the water in the direction of the incident ray AO and along OB', the ray is deflected at O and takes the direction OB. The angle $B'OB$ is called the **angle of deviation,** and the change in direction of the incident ray when passing through the water is called **refraction;** AO is called the **incident ray** and OB the **refracted ray.** Through O, draw $C'C$ perpendicular to $H'H$; then AOC is the **angle of incidence** and BOC' is called the **angle of refraction.** It is to be noted that the incident ray and the refracted ray are on opposite sides of the perpendicular drawn at the point of incidence O; also, the angle of refraction

increases as the angle of incidence increases, and vice versa; hence, when the incident ray is perpendicular to the surface $H'H$, there is no refraction, both the incident ray and the refracted ray being normal to $H'H$; but for any other position, a ray is always refracted when it enters or leaves a different medium. With but few exceptions, when a ray passes from a transparent medium of less density (as air) through or into one of greater density (as water, glass, etc.), the refracted ray is inclined *towards* the normal drawn through the point of incidence; thus, in Fig. 32, OB is

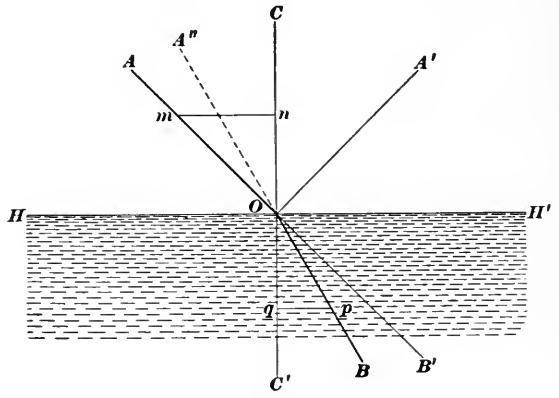

FIG. 32.

inclined towards OC', and BOC' is less than AOC. Consequently, also, when a ray immerges from a medium of greater density into one of less density, the refracted ray is inclined *away* from the normal; thus, in Fig. 32, if BO be the incident ray, it will not follow the dotted line OA'' (which is BO produced), but will take the direction OA, being inclined farther from the normal $C'C$, and AOC is greater than $A''OC = BOC'$.

At any point m on OA, draw a perpendicular mn to OC; then mnO is a right triangle, right-angled at n, and Om is the hypotenuse. The side mn is called the *side opposite* the angle O. Now, in any right triangle, the ratio of the side opposite an angle to the hypotenuse is called the sine of that angle; this may be expressed as

$$\text{sine} = \frac{\text{side opposite}}{\text{hypotenuse}}.$$

For example, in the right triangle mnO, $\text{sine } O = \frac{mn}{Om}$, $\text{sine } m = \frac{On}{Om}$,

and sine $n = \frac{Om}{Om} = 1$, that is, the sine of 90° (a right angle) is 1. Here sine O, sine m, etc. mean sine of angle O, sine of angle m, etc. If from the point p, a perpendicular be drawn to $C'C$, pqO will be a right triangle, right-angled at q, and pO will be the hypotenuse; then sine $pOq = \frac{pq}{Oq}$. It has been found by experiment and observation that the ratio of the sines of the angles of incidence to the corresponding angles of refraction is constant; that is, no matter what the inclination of the incident ray may be, the ratio of the sine of the angle of incidence to the sine of the angle of refraction always has the same value, which is called the **index of refraction.** In Fig. 32,

$$\frac{\text{sine } AOC \text{ (angle of incidence)}}{\text{sine } BOC' \text{ (angle of refraction)}} = \frac{mn}{Om} \div \frac{pq}{Op} = \frac{mn \times Op}{pq \times Om} = \frac{mn}{pq}$$

when Op is made equal to Om, as is usually done.

The index of refraction varies for different mediums; in tables that give the values of the index for various mediums, the ray of light is supposed to pass from a vacuum into the given medium, and the indexes of refraction are called **absolute indexes.** It may be remarked that the absolute index of refraction for air is so nearly 1 that it may be considered as 1 in practice; in other words, there is practically no refraction in air.

150. If the ray pass from a denser medium into a rarer one, as from water into air, the refracted or emergent ray is inclined *away* from the normal. Thus, referring to Fig. 33, let AO be a ray that leaves the water at O; it is refracted and has the direction OB in the air. If the ray had the direction CO, the refracted ray would have the direction OD, and would lie in the upper surface of the water. The angle COP' for which the emergent ray lies in the surface of contact between the two mediums is called the **critical angle;** for water, its value is 48° 33′, say 48½°. If the incident ray make a still greater angle of incidence, it will not leave the water at all, but will be reflected back in the same manner as though the surface of the water were a mirror. This is called **total reflection,** because no part of the ray is absorbed by the reflecting surface; thus, the ray EO is reflected along OF. This phenomenon applies to other transparent substances, as glass and quartz, and is made use of in the construction of some optical instruments. A prism face can thus be made to reflect certain rays and to transmit others.

The direction of a ray of light in a medium of uniform density is straight, that is, it is a right line. If a ray pass from one medium, as air, through another, as glass, and on into the first again, the ray will be refracted twice and the incident and emergent rays will be parallel if the surfaces of the refracting substance be parallel.

It is because of refraction, that a straight stick or rod appears bent when partly submerged in water. For instance, the stick *S*, Fig. 33, will appear as *fgh* instead of as *fga* when the eye is

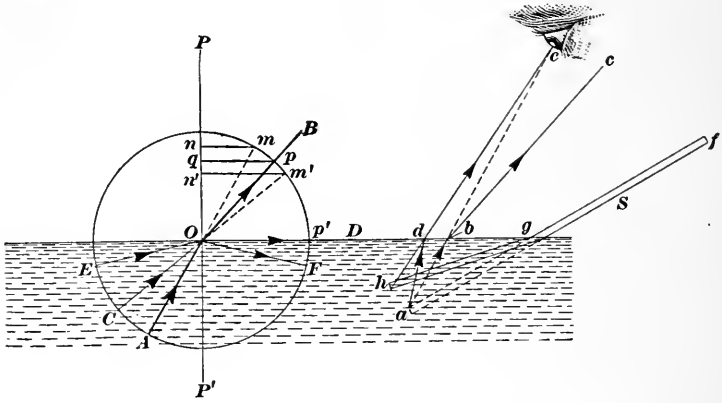

Fig. 33.

situated at *e*. If the entire stick were in air, a ray from *a* to the eye would lie along *ae;* but on account of the refraction, the ray is bent, and takes the direction *bc*, and does not enter the eye. The ray from *a* that enters the eye has the direction *ad* in the water and *de* in the air; this makes the end of the stick appear to be at *h*, *h* being on the line *ed* produced. As *h* is nearer the surface than *a*, the depth of any object below the surface does not seem as great as it really is (unless the eye is in a vertical line over the object. A small fish lying in the water at *a* will appear to be at *h* when the eye is anywhere along the line *ae*.

When a ray of light is capable of being refracted, it is said to be **refrangible,** the word refrangible being used instead of refractable. As will presently be shown, certain kinds of light rays are more refrangible than others.

151. Refraction through a Prism.—Let *ABC*, Fig. 34, be a cross-section of a transparent colorless glass prism, and let *M* be a radiant. Draw *CD* bisecting the angle *C;* suppose the prism

to be so located that CD is vertical. It will evidently be possible to place the prism in such a position, with CD vertical, that a ray MN will be refracted along NP, perpendicular to CD; NP will then be horizontal. When the refracted ray emerges from the prism at P, it will take the direction PQ, the angle BPQ being

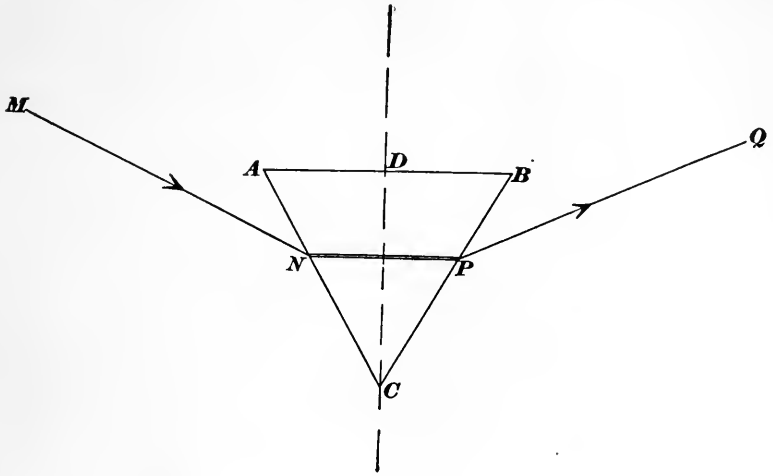

Fig. 34.

equal to ANM. It is also possible to place the prism so that a ray, when refracted will meet the opposite face at such an angle that the ray will be either absorbed in, or reflected by, the surface (Art. **150**).

LENSES

152. A **lens** is a refractive medium bounded by two surfaces through which light passes; one of the surfaces is spherical (that is, a part of a spherical surface) and the other is either a plane or a

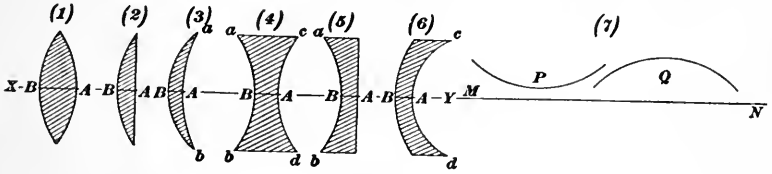

Fig. 35.

part of a spherical surface. Lenses are classified according to the nature of these surfaces, there being six different kinds, shown in section in Fig. 35 and numbered from 1 to 6. Before naming

them, refer to (7), which shows two curves P and Q and a right line MN that may be considered to be the trace of a plane, as the surface of a flat table top. The curve P may be regarded as the inside surface of a saucer; it is said to be **concave** with respect to the plane (or line) MN; the curve Q may be regarded as the inside surface of a saucer that has been turned upside down, and it is said to be **convex** with respect to the plane (or line) MN. Bearing these definitions in mind, lens (1) is a double convex lens, because, if laid on a flat surface with side B down, the upper side A will be convex; and if laid with side A down, the upper side B will be convex. Lens (2) is called **plano-convex,** because, if laid on a plane surface with side B down, the upper surface (which is flat) will be a plane, and if laid with side A down, the upper surface B will be convex. Lens (3) is crescent-shaped and is called a **meniscus;** if laid with side B down, the upper surface A will be concave, and if turned upside down (resting on the points a and b), the upper surface B will be convex. Lens (4) is called **double-concave,** because, whichever side is down, the other will be concave. Lens (5) is called **plano-concave,** side A being flat and B concave to it. Lens (6) is called

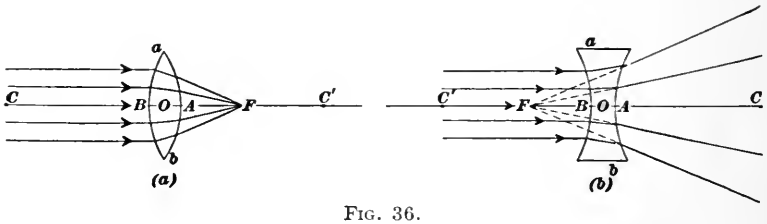

Fig. 36.

concavo-convex, because, if side B is down, side A will be concave, and if side A is down, side B will be convex. Strictly speaking, lens (3) might also be called concavo-convex, but on account of its crescent shape, it is called a meniscus, and the term concavo-convex is restricted to the form shown in (6).

Referring to Fig. 36, in both (a) and (b), C and C' are the centers of the spherical surfaces, CA being the radius of the surface A and $C'B$ the radius of the surface B. The line CC' joining the two centers is called the **principal axis** of the lens; in Fig. 35, XY is the principal axis. The two surfaces A and B are called the **faces** of the lens. Every lens has a point O, Fig. 36, (a) and (b), called the **optic center,** which is situated between the faces in the

case of the double convex or double concave lenses. If the radii CA and $C'B$ are equal, the optic center is midway between the faces; in any case, it lies on the principal axis.

A lens may be considered as composed of an infinite number of prisms; the explanations in Art. **151** therefore cover the principle of the lens. In general, the rays transmitted by any *convex* lens are caused to *converge*, while those transmitted by a *concave* lens are caused to *diverge*. The effects of a double convex lens (which is the most common form) and of a double concave lens on a beam of rays parallel to the principal axis are shown in (*a*) and (*b*), Fig. 36. In (*a*), if the lens is properly ground, the refracted rays meet in a point F, which is called the **principal focus.** In (*b*) the emergent rays cannot meet; but if their lines of direction be produced backwards, they will meet in a point F, as shown, which is the principal focus; the emergent rays appear to come from this point. The distance FO between the principal focus and the optic center is called the **focal length.** The distance ab is called the *diameter* of the lens. The thinner the lens for the same diameter the flatter will be its faces, the longer will be the radii CA and $C'B$, and the longer will be the focal length.

The rays of light from the sun are parallel. If a convex lens be held in front of a piece of paper in such a manner that the light rays from the sun are parallel to the principal axis of the lens and the distance between the paper and the lens is increased or decreased until the rays converge in a point, the point is the principal focus, and the rays are said to be **focused.** If the paper and lens are then both kept stationary, the paper will very soon get hot at the point where the rays are focused and a little later will take fire. A lens acting in this manner is called a *burning glass.* If a luminant be placed at the principal focus, the rays from it will emerge parallel to the principal axis. On the other hand, if the light be placed beyond the principal focus, the emergent rays will converge and form an image; this can be easily verified by holding a lens between the flame of a candle and a sheet of paper, moving the lens and the paper until they are so adjusted with respect to the flame that a distinct image of the flame can be seen on the paper. This is the principle of the camera, in which the lens is moved to get the image distinct, *i.e.*, to get the object "in focus." The eye is a camera; but, in this case, instead of the lens moving, it automatically becomes thinner or thicker, according as the object is far or near from the eye.

153. The Magnifying Lens or Simple Microscope.—Referring to Fig. 37, L is a double convex lens and F is its principal focus. An object AB is between the lens and F, and the rays enter the eye on the other side of the lens. The effect is as though the rays came directly from a magnified image at $A'B'$. Such a lens is a **simple microscope** or **magnifying glass.** Note that the apparent positions of A and A' and of B and B' are determined by extending the ray AO, which passes through the optic center O of the lens, and tracing the ray BD which is parallel to the

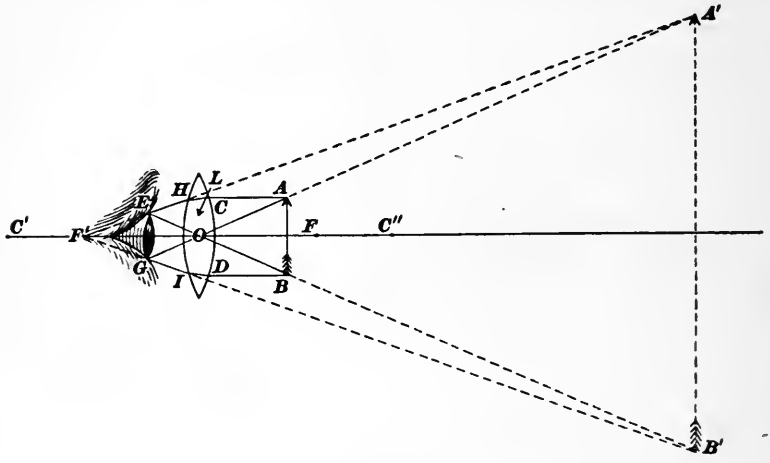

Fig. 37.

principal axis and consequently a limiting ray, until it meets AO produced at G. Similarly, the limiting ray AC and the undeviated ray BO are traced until they meet at E. If, now, the emergent ray HE and the ray AOG are produced backwards, they will meet at A', and IG and BOE produced backwards will meet at B′. All other points in AB produce images between A' and B', and this complete image of the points in AB is what the eye sees. It will be noticed that if the emerging rays HE and IG are produced, they will meet at the principal focus F', since AC and BD are parallel to the principal axis. The lens must be so held that the points E and G will fall on the lens of the eye.

The compound microscope is an arrangement of several lenses that greatly magnifies the object. It is used for measuring the length and thickness of fibers, counting bacteria in milk, etc. The limit of magnification for the simple microscope is about

100 diameters; the limit for the compound microscope has not as yet been reached, but a power of 1200 diameters is not uncommon, and some instruments have a power of from 2500 to 3000 diameters.

DISPERSION OF LIGHT

154. The Solar Spectrum.—Suppose that *ab* is a narrow slit in an opaque screen *R*, Fig. 38 and that a thin beam of sun light passes through the slit, impinges on the glass prism *P* along *cd*, is refracted to *ef*, from whence it emerges. The light rays from *ab* to *cd* and from *cd* to *ef* are parallel; but after leaving the prism at *ef*, they form a pencil of rays *egjihf* having the shape of a wedge.

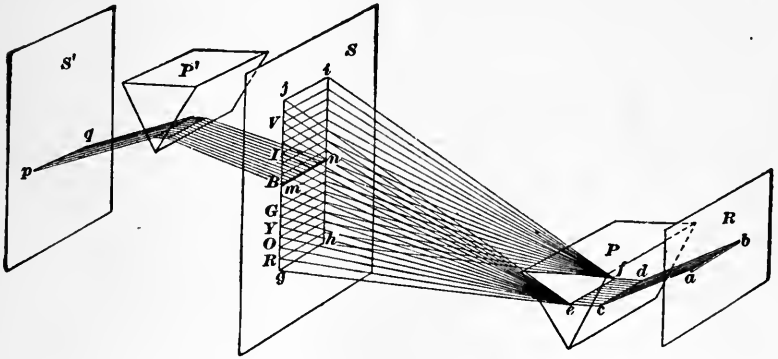

Fig. 38.

They will intersect the screen *S* in a rectangle *gjih* and exhibit all the colors of the rainbow. The colored outline thus formed on the screen *S* is called the **solar spectrum;** the colors are called the colors of the spectrum or the **prismatic colors.**

155. An examination of the spectrum shows seven prominent colors, viz.: red, orange, yellow, green, blue, indigo, and violet; these are called the seven prismatic colors. Moreover, they are always arranged in the above order, with the red nearest the line *ef*, where the rays emerge from the prism, and the violet farthest away. The first letters of the words designating each of the seven colors are given on the margin of the spectrum in Fig. 37, and show the position of colors in the spectrum; reading them downwards, it will be noticed that they form the word *vibgyor*, which will assist in remembering the colors and their order. It must not be inferred that these are the only colors or

that they are sharply differentiated; as a matter of fact, the spectrum shows every color, shade, hue, and tint, all blending into one another, but the colors mentioned are the most prominent, and their order is always as here given.

The cut shows that the rays entering the red part of the spectrum are not as refrangible as those entering the regions above the red, the violet rays being much more refrangible than the red rays. As the result of experiment and careful measurement (by methods that cannot be explained here), it has been found that the wave lengths of the rays differ in accordance with the color produced, the wave length of the violet rays being the shortest and of the red rays the longest. Since the speed, or velocity, of all rays is the same, it follows that the longer the wave the smaller will be the number of vibrations per second in the ether; and the shorter the wave the greater will be the number of vibrations per second. Hence, the red rays not only have a greater wave length than the violet rays, but they also make a smaller number of vibrations per second. Color is therefore due to the wave length; and if the wave length is greater than that of the red ray or is shorter than that of the violet ray, the ray will make no impression on the eye, that is, it cannot be seen. It is likewise evident that each *color has its own index of refraction.*

156. White Light and the Primary Colors.—Since all colors except white and black are included in the spectrum, it is now clear that white light as received from the sun is a compound or mixture of all the colors. Black is not a color at all—it indicates the absence of color. The process of resolving light into its component colors is called **dispersion** or **decomposition of light.**

None of the colors of the spectrum can be decomposed into any other color or combination of colors; this can be shown by cutting a slit anywhere in the screen covered by the spectrum, as *mn* in the blue region, Fig. 38. Allowing the rays to pass from this slit through the prism P' to the screen $S,'$ both the incident and emergent rays will be parallel, and the color on the screen S' will be exactly the same as that of the slit on S. From this it will be seen that each color has its own index of refraction.

If the screen S be replaced by a series of plane mirrors so arranged that they will reflect the various rays received from the prism P to a common point, called the **focus,** the light at the focus will be white, thus proving that *a combination of all the colors of the spectrum produces white.*

157. Visible and Invisible Rays.—Those rays which produce the sensation of color, those whose wave lengths are not longer than the red rays or shorter than the violet rays, are called the **visible rays.** It can be easily proved that white light contains other rays, some of which extend beyond the red and others beyond the violet; in other words, some of these rays are less refrangible than the red rays and others are more refrangible than the violet rays. These rays are called the **invisible rays.** The invisible rays beyond the red are frequently called the **ultra-red rays,** those beyond the violet the **ultra-violet rays,** ultra meaning *beyond.*

The ultra-red rays are heat rays, and their presence may be proved by placing a thermometer in that part of the spectrum beyond the red, when a rise in temperature will be observed. The ultra-violet rays are actinic or chemical rays, and their presence is revealed by their action on the photographic plate.

158. Primary Colors.—Of the seven principal colors of the spectrum, three—red, yellow, and blue—are called the **primary colors,** because by properly mixing these colors, any other color, hue, shade, or tint may be obtained, including white.

159. Secondary and Tertiary Colors.—When two primary colors are mixed, the result is a **secondary color;** thus, red and yellow produce orange, yellow and blue produce green, and red and blue produce violet. The secondaries vary in shade and tint in accordance with the proportions of the primaries used.

When two secondary colors are mixed, the result is called a **tertiary color.** A tertiary color is said to be a combination of four colors, because the two secondaries must have one color in common, which is counted as two colors, and these added to the two primaries make four colors; thus, green and orange produce brown = yellow + blue + yellow + red. Hence, brown may have about twice as much yellow as it has of red or blue, according to the proportions used.

160. Natural Colors.—The color of an object as seen in a clear white light is called its **natural color.** The reason that an object has color is because it absorbs all the visible light rays except those that are necessary to produce the natural color, the latter being reflected to the eye. This fact is easily proved: Place a red rose in the path of the beam of light between the slit *ab* and the prism *P* in Fig. 38; the rose will be red. If held against the

screen in the red part of the spectrum, it will still be red; but if placed in the yellow part or any part above the yellow, it will appear black, showing that it has absorbed the light rays, none of them being reflected. In other words, a red object reflects only red rays, a yellow object only yellow rays, and a blue object only blue rays. A green object reflects both yellow and blue rays, and these combine to produce green, etc.

An object never appears in its natural color or colors unless viewed in a clear white light or in a light having the exact color of the object. It is for this reason, that it is practically impossible to match colors, shades, etc. under artificial light, because no artificial light has yet been produced that is a pure white. A white lily appears white in a white light, because it reflects all the component colors of white light; but if it be placed in a red light, it will appear to be red, and if placed in a blue light, it will appear to be blue, etc., reflecting in each case the rays that make up the light.

The color of a substance, as a sample of paper, can be represented numerically by means of the tint photometer, which measures the percentage of red, yellow and blue in light reflected from the surface. This instrument is described in the Section on "paper testing".

161. The Spectroscope; Spectrum Analysis.—Any substance —solid, liquid, or gaseous—that can be burned, giving off a gaseous flame, has a spectrum peculiar to the substance and characteristic of it. These spectrums have bright lines, the number of which and their color and position identify the substances. The spectrum of burning sodium shows, in addition to other lines, two conspicuous, bright yellow lines that are so close together as to appear almost as one line; consequently, whenever these two lines appear in a spectrum of a flaming substance, and in their proper position, it is certain that sodium is present in the substance. The flame of carbon shows two distinct lines, one green and the other indigo. Other substances have their own special characteristics, which have been examined and tabulated, and when burned may be identified by their spectrums. This method of identifying substance is called **spectrum analysis;** by means of it, the composition of the sun and the stars has been ascertained.

162. The **spectroscope** is an instrument used in determining the color and position of the bright lines that are peculiar to the

substance being analyzed. It consists of, see (*a*), Fig. 39, a prism *P* enclosed in a case from which light is excluded and to which are attached three tubes *M*, *N*, and *T*. Light from the

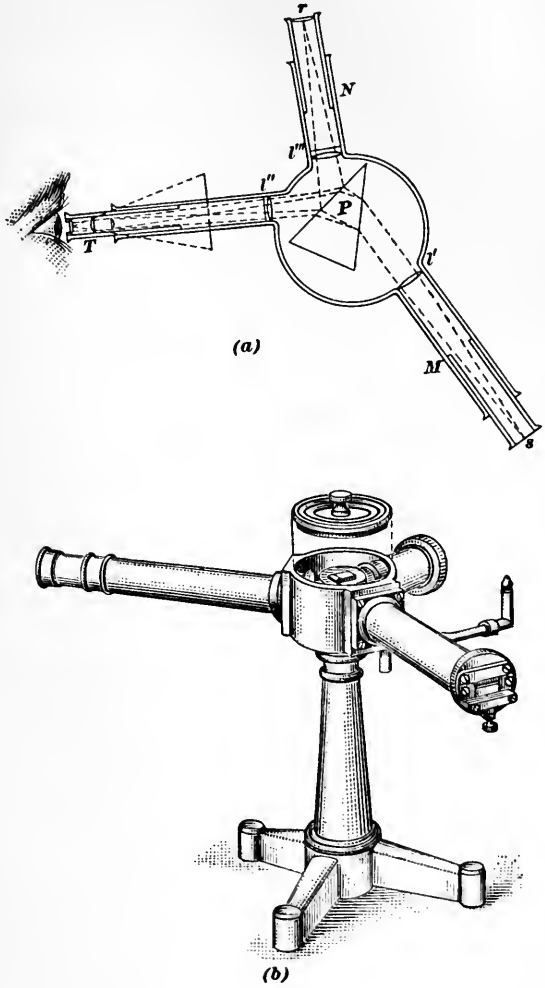

FIG. 39.

burning substance enters tube *M* through a very narrow slit *s*, passes through the lens *l'*, which makes the rays parallel, then passes through the prism *P*, which disperses the rays, resolves them into their spectral colors, and refracts them through the

tube T to the eye. Before reaching the eye, they pass through the lens l'', which converges them to a focus, beyond which they are magnified by the eyepiece, the tube T being a telescope. The tube N contains a scale at r, the light rays from which pass through the lens l''', which makes the rays parallel; they strike the prism P, and are reflected through the telescope tube T to the same relative position as the magnified image of the spectrum received from the rays passing through the slit s, thus making it possible to measure with a high degree of precision the position of any bright lines that may occur in the spectrum of the substance being analyzed. A perspective view is shown at (*b*), Fig. 39. As may be supposed, there are many makes of spectroscopes, the simpler ones having no scale for measuring the positions of the bright lines.

By means of spectrum analysis, several of the chemical elements have been discovered, notably helium, which was found in the sun and named before it was discovered as one of the constituents of the earth. In some cases, spectrum analysis can be relied on when chemical analysis fails; thus, human blood and the blood of a pig cannot be distinguished chemically, but they can be identified separately by the spectroscope.

163. Complementary Colors.—If two colors when mixed produce white they are said to be complementary. For instance, if a line be drawn across the spectrum of white light, and one of the two colors contains all the colors on one side of the line and the other color contains all the colors on the other side of the line, the two colors when mixed will produce white and are called **complementary.**

The following interesting experiment will show the complementary colors: Place on a black surface a small square or disk of some bright color, as red, yellow, or blue, and gaze at it steadily for about a minute; then look at a white wall or white surface of any kind, as a sheet of paper, and the outline of the surface looked at will immediately appear, but its color will be the complement of that of the object. If the object is red, the complement on the white surface will be bluish-green, if yellow, it will be blue, and if green, it will be crimson, etc. The following are some of the colors and their complements:

Red	Orange	Yellow	Violet	Green
Bluish-green	Greenish-blue	Blue	Greenish-yellow	Crimson

The explanation of this phenomenon is that the nerves of the eye which respond to the color of the object gazed at become fatigued and do not respond to the white, which includes all colors, until a short time after the gaze has been removed from the object; the remaining nerves, which respond instantly to the other colors, blend these colors and produce the complementary color. As will be naturally expected, the experiment will be more successful if the object is placed on a black surface, since the only rays reflected to the eye will then be those from the object.

164. Lengths and Vibrations of Light Waves.—As was previously mentioned, the wave length and, consequently, the number of vibrations per second varies in accordance with the color. It is the rate of vibration that determines any particular color. The wave lengths have been measured for different colors, and knowing the wave length for any color, the rate of vibration for that color may be found by dividing the velocity of light by the length of the wave. Thus, the wave length of a red ray

	Wave length in inches	Vibration per seconds
Red	.0000268	$441{,}000{,}000{,}000{,}000 = 441 \times 10^{12}$
Orange	.0000248	$476{,}000{,}000{,}000{,}000 = 476 \times 10^{12}$
Yellow	.0000228	$518{,}000{,}000{,}000{,}000 = 518 \times 10^{12}$
Green	.0000204	$579{,}000{,}000{,}000{,}000 = 579 \times 10^{12}$
Blue	.0000182	$649{,}000{,}000{,}000{,}000 = 649 \times 10^{12}$
Indigo	.0000175	$675{,}000{,}000{,}000{,}000 = 675 \times 10^{12}$
Violet	.0000166	$712{,}000{,}000{,}000{,}000 = 712 \times 10^{12}$

is .0000268 inch; the velocity of light is 186,400 miles = 186400 $\times$ 63360 inches per second; hence, the number of vibrations per second required to make light visible as a red ray is

$$\frac{186400 \times 63360}{.0000268} = 441{,}000{,}000{,}000$$

which may be written 441×10^{12}, a number almost inconceivably large. The wave lengths and the vibrations per second for the seven principal colors are given in the foregoing table.

165. Mixing Pigments.—Any coloring material used for painting or printing is called a **pigment.** Coloring materials used in the paper industry are usually dye-stuffs, which, when fixed on the fiber have the properties of pigments. Mixing pigments to get a certain desired color is quite a different problem from that of mixing or blending colored lights to get the same color. For instance, when yellow light is added to a particular shade of blue,

the result is white light, because, according to Art. **163,** the two colors are complementary. If a yellow pigment be added to a blue one, the resulting color will be green; the reason for this is that the yellow pigment absorbs the blue and violet, the blue pigment then absorbs the red and yellow, with the result that only the green is left to be reflected. The final result will be obtained regardless of which color is applied first; simply allow it to dry and then apply the other color on top of the first Exact reproductions of the spectral colors cannot be obtained with pigments, because the pigments themselves do not have exactly the same shades as the colors of the spectrum, called the *spectral* colors.

166. Three-color Process.—What is called the **three-color process** in printing is a more or less successful attempt to reproduce objects in their natural colors when using only three colors of ink. When the area of a disk is divided into three sectors, and one sector is colored red, the second green, and the third blue-violet, and the disk is caused to revolve rapidly, the three colors will blend into one single color. The nature of the color obtained will depend upon the relative areas of the sectors, and by varying these, any desired color may be obtained. Calling the three colors just mentioned the primary colors, the primary pigments are the complements of these, and are (in order) peacock blue, crimson, and light yellow. It is to be observed that when the three primary colors mentioned above are mixed, the result will be white; but when the three primary pigments are mixed, the the result is *black*, because they absorb all the colors of white light. If black is mixed with white, the result is gray.

In printing, the three primary pigments are applied to white paper in the following manner: Three different photographs of the object, which may be a natural object or a painting, are made, a gelatine screen, transparent, of the same color as one of the primary colors being placed in front of the camera lens, a different color for each photograph, and care is taken to have each photograph exactly the same in size. Then halftone blocks are made in the usual way from these photographs. The colored print is then made by printing on white paper from one of these halftone blocks, using an ink that is of the same color as the complement of the color of the screen that was used when the photograph was taken. After the ink has dried, the sheet is run through the press again, one of the other halftone blocks being

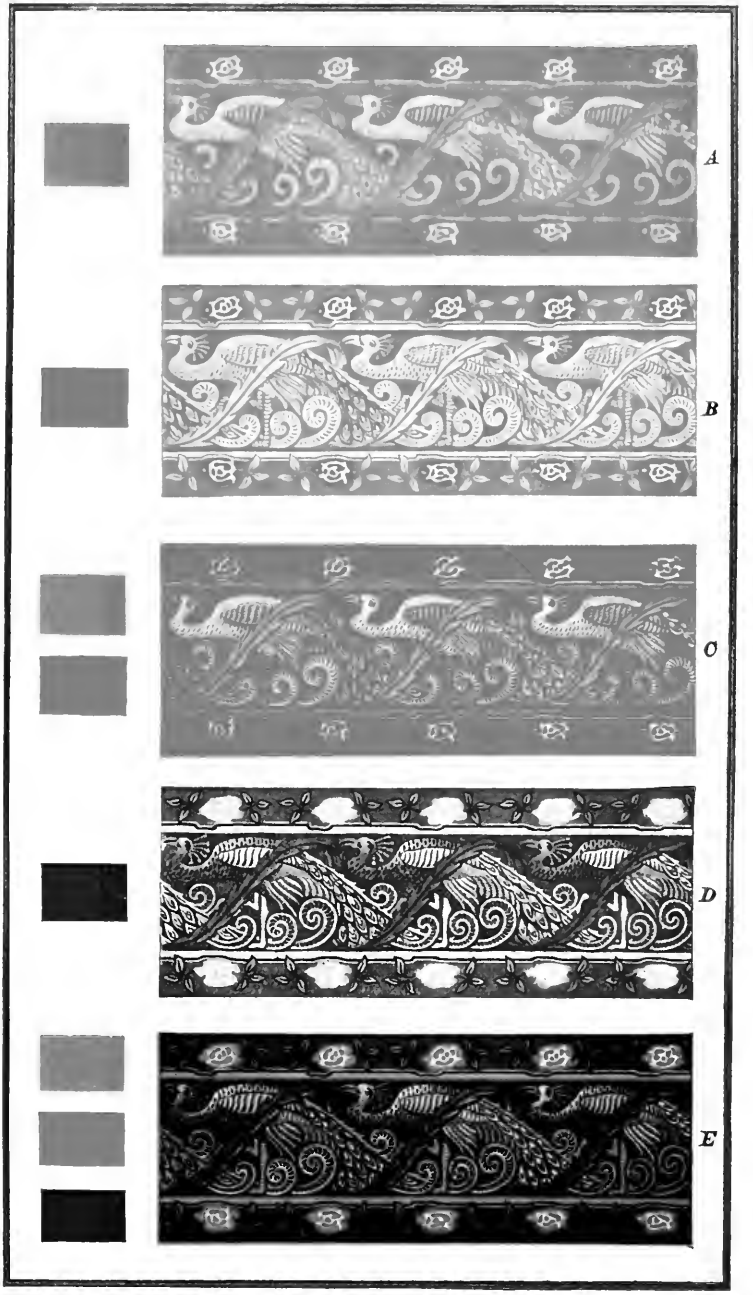

Fig. 40

ELEMENTS OF PHYSICS

(PART 2)

EXAMINATION QUESTIONS

(1) Steam is cut off in an engine cylinder at $\frac{3}{8}$ths stroke and expands to the end of the stroke. Assuming that the fall in pressure follows Boyle's law for increase in volume (which is approximately true), what will be the pressure at the end of the stroke, if the pressure at cut off is 126 lb. per sq. in. gauge?

Ans. 38+ lb. per sq. in. gauge.

(2) If 4.6 cu. ft. of air at 96°F. expand at constant pressure until the temperature becomes 53°F., what will be the volume?

Ans. 4.244−cu. ft.

(3) A vessel holding 1.58 cu. ft. is filled with air at a pressure of 14.65 lb. per sq. in. abs.; if the temperature of the air is 70°F. and it is heated to 700°F., what will be its pressure?

Ans. 32.08 lb. per sq. in. abs.

(4) If 2.66 cu. ft. of air at 62°F. and a pressure of 1 atmosphere, is compressed to .52 cu. ft., what will be the tension when the air has a temperature of 112°F.?

Ans. 67.71 lb. per sq. in. gauge.

(5) Taking the specific gravity of nitrogen as .971, what is the weight of 875 cu. ft. when the tension is 20 lb. per sq. in. abs. and the temperature is 80°F.? *Ans.* 85.186 lb.

(6) Referring to the last example, what is the weight of 1 cu. ft. of nitrogen at 32°F. and a tension of 1 atmosphere?

Ans. .078517 lb.

(7) Referring to Questions 5 and 6, if 3.8 cu. ft. of nitrogen at 60°F. and a tension of 1 atmosphere is heated at constant volume to 1000°F., (*a*) how many B.t.u. must be expended? (*b*) how many foot-pounds of work are equivalent to this? (*c*) what will be the tension?

Ans. { (*a*) 46.7 B.t.u.
(*b*) 36,333 ft.-lb.
(*c*) 41.3−lb. per sq. in. abs.

(8) If 23 pounds of water at 45° are mixed with 18 pounds at 190° and a piece of ice weighing 3 pounds is placed in the mixture, what will be the temperature after the ice has melted and the entire mixture has the same temperature, not considering the vessel holding it? *Ans.* 93.61°.

(9) A platinum ball weighing 15.708 oz. is heated to a temperature of 2700°F.; it is then placed in a wrought-iron vessel containing 2 lb. 5 oz. of water. If the temperature of the vessel and the water is 70°F., what will be the temperature of the mixture? *Ans.* 104.3°F.

(10) Referring to the last question, suppose the temperature of the ball had not been known, but the temperature of the mixture had been found to be 104°F., what would be the temperature of the ball? *Ans.* 2677°F.

(11) How many gram calories are equivalent to (*a*) 2.571 B.t.u.? (*b*) to 1 B.t.u.? *Ans.* { (*a*) 647.9 gram cal. (*b*) 252 gram cal.

(12) What is the temperature of saturated steam in a soda pulp digester when the pressure is 110 lb. per sq. in. gauge? *Ans.* 344.1°F.

(13) What is the total heat of 1 pound of steam in a condenser when the vacuum gauge reads 11.5 in.? *Ans.* 1141.2 B.t.u.

(14) What is the total heat of 7 lb. of steam when the pressure is 60 lb. per sq. in. gauge? *Ans.* 8270 B.t.u.

(15) What is (*a*) a standard candle? (*b*) what is the candle-power of a lamp that, when placed 112 in. from a screen, illuminates the screen with the same intensity as a standard candle at a distance of 24 in.? *Ans.* $27\frac{7}{9}$ c.p.

(16) What is meant (*a*) by diffusion of light? (*b*) by refraction of light? (*c*) by reflection of light? (*d*) what is the relation between the angle of incidence and the angle of reflection?

(17) What are (*a*) the primary colors? (*b*) what is meant by secondary and tertiary colors? (*c*) what causes color?

(18) What (*a*) is a pigment? (*b*) If three pigments having the colors of the three primary colors are mixed, what is the result? (*c*) three beams of light having the colors of the three primary colors are mixed, what is the result? (*d*) What is the cause of the difference in the two results?

INDEX

NOTE—The paging begins with 1 in each section, and each section has its number printed on the inside edge of the headline of each page. To find a reference, as "Abbreviations on drawings, §3, p16," glance through the volume until §3 is found and then find page 16.

A

Abbreviation in division, §2, p31
  in multiplication, §2, p30
Abbreviations on drawings, §3, p16
Absolute index (of refraction), §4, p103
  pressure, definition of, §4, p53
  temperature, §4, p61
  zero of pressure, §4, p54
  zero of temperature, §4, p61
Abstract number, §1, p2
Acceleration, definition of, §4, p8
  positive and negative, §4, p9
  unit of, §4, p9
Accuracy in calculation, §2, pp27–33
  in measurements, §2, p28
  in numerical operations, §2, p29
Actinic rays, §4, p91
Action, line of, §4, p19
Acute angle, §2, p46
Addition, definition of, §1, p11
  of compound numbers, §1, p120
  of decimals, §1, p68
  of fractions, rule for, §1, p55
  of mixed numbers, §1, p56
  of monomials, §2, p4
  of numbers, §1, pp13–18
  of polynomials, §2, p10
  rule for, §1, p15
  sign of, §1, p11
  table of, §1, p12
Adhesion, definition of, §4, p10
Adjacent angles, §2, p45
Aggregation, signs of, §1, p76; §2, p15
Air, definition of, §4, p45
Altitude of cone, §2, p121
  of cylinder, §2, p111
  of parallelogram, §2, p61
  of prism, §2, p102
  of pyramid, §2, p104
  of triangle, §2, p56
Amount, definition of, §1, p101
  rule to find, §1, p101
Amplitude, definition of, §4, p91
Analysis, spectrum, §4, p112
Ancroid barometer, description of, §4, p52
Angle, acute and obtuse, §2, p46
  critical, for emergent ray, §4, p103
  definition of, §2, p45
  inscribed, §2, p71
  of deviation, §4, p101
Angle of incidence, §4, pp97, 101
  of reflection, §4, p97
  of refraction, §4, p101
  re-entrant, §2, p66
  right, definition of, §1, pp110, 112; §2, p46
  sides of, §2, p45
  vertex of, §2, p45
Angles, adjacent, §2, p45
  circular measure of, §2, p83
  equality of, §2, p54
  measurement of, §2, p46
Angular measure, table of, §1, p110
Apothem, definition of, §2, p67
Arabic notation, §1, pp3, 5
Arc, length of circular, §2, p85
  (of circle), definition of, §2, p70
  of curve, §2, p44
Arc, definition of, §1, p114
Area, entire, definition of, §2, p103
  of any plane figure, §2, p93
  of circle, to find, §2, p77
  of cylinder, §2, pp111, 112
  of ellipse, §2, p92
  of fillet, §2, p88
  of frustum of cone, §2, p123
  of parallelogram, §2, p62
  of prism, §2, p103
  of pyramid, §2, p105
  of regular polygons, §2, p68
  of ring, §2, p82
  of sector and segment, §2, p87
  of sphere, §2, p125
  of zone, §2, p126
Arithmetic, definition of, §1, p2
Arithmetical mean, §1, p125
Application, point of, §4, p14
Atmosphere, definition of, §4, p45
  pressure of, §4, p46
  value of, §4, p46
Atom, definition of, §4, p2
Attraction, capillary, §4, p39
Average of numbers, §1, p125
Avoirdupois weight, table of, §1, p108
Axes, major and minor, of ellipse, §2, p91
Axis of cone, §2, p120
  of pyramid, §2, p105
  of sphere, §2, p124
  of symmetry, §2, p137
  principal, of lens, §4, p106

B

Back view, §3, p7
Barometer, definition of, §4, p51
Barometers, mercurial and aneroid, §4, p52
Base, definition of, §1, pp98, 100
of parallelogram, §2, p62
of spherical sector, §2, p127
of triangle, §2, p51
rule to find, §1, pp100, 101, 102
Bases of a solid, §2, p101
of cylinder, §2, p110
of spherical segment, §2, p126
Beam of light, rays, §4, p92
Beaumé scale for hydrometer, §4, p37
Belt, to find length of, pp80, 81
Binomial, definition of, §2, p9
Blow, definition of, §4, p19
Body, definition of, §4, p1
Boiling point, table of, §4, p86
Bore or bored, definition of, §3, p16
Bottom view, §3, p7
Boyle's law, §4, p57
Brightness of light, §4, p95
British imperial gallon, §1, p109
thermal unit, definition of, §4, p67
Brittleness, definition of, §4, p6
Broken and dotted lines, use of, §3, p12
line, §2, p44
lines, use of, §3, p12
Bunsen's method of measuring intensity of light, §4, p96
Buoyancy, definition of, §4, p32
Bushel, British, §1, p110
Winchester, §1, p109

C

Calculation, accuracy in, §2, pp27–33
definition of, §1, p2
Calorie, definition of, §4, p67
gram or small, §4, p68
kilogram or large, §4, p68
Cancelation, §1, p37
Candlepower, definition of, §4, p95
Candle, standard, §4, p95
Capacity, heat, §4, p68
Capillarity, definition of, §4, p39
Capillary attraction, §4, p39
attraction, examples of, §4, p41
Center of gravity, §2, p140
of gravity, to find experimentally, §2, p141
lines, §3, pp10, 13
of ellipse, §2, p91
of polygon, geometrical, §2, p66
of sphere, §2, p124
of symmetry, §2, pp138, 140
optic, §4, p106
Centigrade degrees to Fahrenheit, §4, p44
scale, §4, p43
Central angle, §2, p71
C. G. S. system, §4, p12
Chain discount, §1, p103
Charles' law, §4, p60
Check for division, §1, p32
for multiplication, §1, p26
Chord, definition of, §2, p70
of arc, to find, §2, p75
of half the arc, to find, §2, p76
Cipher, naught, or zero, §1, p5
Circle, definition of, §2, p68
to describe a, §2, p69
to find area and circumference, §2, p77
to find diameter or radius, §2, p77
Circles, concentric and eccentric, §2, p81
great and small, §2, p125
properties of, §2, pp71–74
Circular arc, definition of, §2, p70
arc, length of, §2, p85
measure of angles, §2, p83
Circumference, definition of, §2, p70
of circle, to find, §2, p77
of ellipse, §2, p92
Circumscribed polygon, §2, p89
Clearing equation of fractions, §2, p20
Coefficient, definition of, §2, p3
of conductivity, definition of, §4, p76
of conductivity, table of, §4, p76
of expansion, §4, p72
Coefficients of expansion, table of, §4, p73
Cohesion, definition of, §4, p9
Collecting terms, definition of, §2, p19
Coloring paper, reason for, §4, p118
Color, natural, §4, p111
Colors, complementary, §4, p114
primary, §4, p111
prismatic, §4, p109
secondary and tertiary, §4, p111
Combined pressures on submerged surface, §4, p29
Common denominator, §1, p52
divisor, greatest, §1, p43
multiple, least, §1, p45
Compasses, definition of, §2, p69
Complementary colors, §4, p114
Complete divisor, §1, p93
Complex fraction, §1, p62
Composite number, definition of, §1, p35
Compound fraction, §1, p64
proportion, §1, p83
microscope, §4, p108
number, definition of, §1, p106
numbers, addition of, §1, p120
numbers, division of, §1, p123
numbers, multiplication of, §1, p122
numbers, reduction of, §1, pp116–120
numbers, subtraction of, §1, p121
Compressibility, definition of, §4, p4
Computation, definition of, §1, p2
Concave lens, §4, p106
polygon, §2, p66
Concavo-convex lens, §4, p106

Concentric circles, §2, p81
Concrete number, §1, p2
Conditions, standard, definition of, §4, p36
Conduction of heat, §4, p75
Conductivity, coefficient of, table of, §4, p76
Conductors of heat, good and poor, §4, p75
Cone, area and volume of, §2, p121
definition of, §2, p120
frustum of, area and volume of, §2, p123
of light rays, §4, p92
of revolution, §2, p120
right, §2, p120
slant height and altitude of, §2, p121
vertex and axis of, §2, p120
Conical surface, §2, p120
Constants, definition of, §2, p32
Constant velocity, §4, p8
Convection, definition of, §4, p77
Conventional sections, §3, p22
Convex area of cylinder, §2, p111
lens, §4, p106
polygon, §2, p66
Cord, definition of, §1, p108
Cored, definition of, §3, p16
Critical angle for emergent ray, §4, p103
Cross hatching, §3, p17
section, §2, p102; §3, 23
Crossed belt, to find length of, §2, p81
Crown of pulley, §3, p23
Cylinder, altitude of, §2, p111
bases of, §2, p110
convex area of, §2, p111
definition of, §2, pp110, 117
development of, §2, p111
diameter of, §2, p111
of revolution, §2, p110
projection of, §3, p25
right, §2, p110
surface of, §2, p110
volume of, §2, p114
Cylindrical ring, volume of, §2, p142
Cube root of numbers, §2, p33–39
Cubes and fifth powers, table of, §2, p35
Cubical contents, definition of, §2, p103
Cubic centimeter, §1, p115
foot, definition of, §1, p111
measure, table of, §1, p108
Curve or curved line, §2, p44

D

d., dia., or diam., definition of, §3, p16
Decimal fractions, §1, p67
point, definition of, §1, p8
Decimals, addition and subtraction of, §1, p68
definition of, §1, pp8, 67
division of, rule for, §1, p73
multiplication of, §1, p69
Decimals, reading, §1, p9
reduction of, to common fractions, §1, pp67, 68
to reduce to fractions having a given denominator, §1, p75
Decomposition of light, §4, p110
Degree of equation, §2, p23
Degrees (of arc), definition of, §1, p110
on hydrometer scale, §4, p37
on thermometer scale, §4, p43
Denominate number, definition of, §1, p106
Denominator, common and least common, §1, p52
of a fraction, §1, p48
reduction of fraction to a given, §1, p51
Density and specific gravity, difference between, §4, p35
definition of, §4, p14
Development of cylinder, §2, p111
Deviation, angle of, §4, p101
Dew point, §4, p87
Diagonal of parallelogram, §2, p61
of square, length of, §2, p63
Diameter of circle, definition of, §2, p70
of circle, to find, §2, p77
of cylinder, §2, p111
of sphere, §2, p124
Diameters of ellipse, §2, p92
Difference, definition of, §1, p18
(in percentage) definition of, §1, p101
rule to find, §1, p102
Diffusion of light, §4, p100
Digits, §1, p5
Dimension lines, §3, p13
Dimensions, over-all, §3, p14
Direct ratio, §1, p78
Direction of motion, §4, p7
Directrix, definition of, §2, p117
Discount, chain, §1, p103
definition of, §1, p102
rate, rule for equivalent, §1, p103
Dispersion of light, §4, p110
Dissolve, definition of, §4, p2
Dividend, definition of, §1, p28
trial, §1, p92
Divisibility, definition of, §4, p2
of numbers, §1, p36
Divisible, definition of, §1, p35
Division, abbreviation in, §2, p31
by a power of 10, §1, p67
check for, §1, p32
definition of, §1, p27
long, §1, p31
of compound numbers, §1, p123
of decimals, rule for, §1, p73
of fractions, rule for, §1, p62
of monomials, §2, p8
of polynomials, §2, pp13–15
rule for, §1, p33
short, §1, p29

Division, signs of, §1, p28
Divisor, complete, §1, p93
definition of, §1, p28
greatest common, §1, p43
trial, §1, p92
Dollar, definition of, §1, p112
Dotted lines, use of, §3, p12
Double-concave lens, §4, p106
Double sign, meaning of, §2, p24
Dozen, definition of, §1, p113
Drawing, definition of, §3, p2
perspective, §3, p2
projection, §3, p2
scale of, §3, p15
scaling a, §3, p16
to scale, §3, p14
working, §3, p8
Drawings, abbreviations on, §3, p16
notes on, §3, p16
reading, directions for, §3, pp25–28
Dry measure, table of, §1, p109
vapor, §4, p83
Ductility, definition of, §4, p6

E

Eccentric circles, §2, p81
Edges of a solid, §2, p101
Elasticity, definition of, §4, p4
Element, definition of, §2, pp110, 120
Elevation, front, §3, p6
rear, §3, p7
side, §3, p6
Ellipse, definition of, §2, p91
diameters of, §2, p92
foci of, §2, p91
periphery and area of, §2, p92
vertexes of and center of, §2, p91
Energy, definition of, §4, p16
potential and kinetic, §4, p16
total, §4, p17
Entire area, definition of, §2, p103
Equality sign, definition of, §1, p11
Equation, clearing, of fractions, §2, p20
definition of, §2, p18
degree of, §2, p23
members of, §2, p18
quadratic, formula for roots of, §2, p25
roots of, §2, p25
transposing terms of, §2, p19
Equations, identical and independent, §2, p18
linear, §2, p24
of first degree, §2, p24
of second degree, §2, p24
quadratic, §2, p23
quadratic, solution of, §2, p25
transformation of, §2, p19
Equilibrium, definition of, §4, p18
Equivalent discount rate, rule for, §1, p103
Ether, definition of, §4, p78
Even number, definition of, §1, p35
Expansibility, definition of, §4, p4
Expansion, coefficient of, §4, p72
linear, surface and cubic, §4, p72
of bodies by heat, §4, p72
Exponent, definition of, §1, p65
Exponents, literal and numerical, §2, p4
Extension, definition of, §4, p1

F

f. or fin., definition of, §3, p16
Faced, definition of, §3, p17
Faces of lens, §4, p106
of solid, §2, p101
Factors, definition of, §1, p22
prime, §1, p36
Fahrenheit degrees, to centigrade, §4, p44
scale, §4, p43
Fifth powers and cubes, table of, §2, p35
root of numbers, §2, p33–39
Figure, order of, §1, p6
Figures, definition of, §1, p5
significant, §2, p27
significant, number required, §2, p32
similar, §2, p131
symmetrical, §2, p137
Fillet, area of, §2, p88
fin. or finish, tool, definition of, §3, p17
First degree equations, §2, p24
Fits, shrinking, §4, p74
Fixed, definition of, §4, p6
Flexibility, definition of, §4, p6
Float, why some bodies, §4, p32
Fluid, definition of, §4, p2
ounce, §1, p109
Foaming, cause of, §4, p88
Foci of ellipse, §2, p91
Focal length of lens, §4, p107
Focus, principal, of lens, §4, p107
Focussed, meaning of, §4, p107
Foot, cubic, definition of, §1, p111
of perpendicular, §2, p55
square, definition of, §1, p111
Force, definition of, §4, p9
measure of, §4, p10
various names of, §4, p9
Formula, definition of, §2, p1
prismoidal, §2, p108
Formulas, application of, §2, p22
Fraction and integer, product of, §1, p58
common, to reduce a, to a decimal, §1, p74
complex, §1, p62
to simplify a, §1, p63
compound, §1, p64
denominator of, §1, p48
mixed, §1, p75
numerator of, §1, p48
power of, §1, p65
proper or improper, §1, p49

Fraction, reduction of integer to improper, §1, p52
reduction of mixed number to improper, §1, p52
reduction of, to a given denominator, §1, p51
signs of, §2, p16
terms of, §1, p49
to divide by a fraction, §1, p61
to divide by an integer, §1, p60
value of, §1, p49
Fractions, addition of, rule for, §1, p55
common or vulgar, §1, p48
decimal, §1, p67
how to write, §1, p50
multiplication of, §1, p58
reduction of, §1, p50
reduction of, to common denominator, §1, p52
reduction of, to lowest terms, §1, p51
subtraction of, rule for, §1, p57
sum of two, §1, p55
Front elevation, §3, p6
view, §3, p6
Froth, cause of and remedies for, §4, p89
Frustum of cone, §2, p122
of pyramid, volume of, §2, p106
Full lines, use of, §3, p11
Fusion, latent heat of, §4, p81

G

g, value of, §4, p13
Gain or loss per cent., rule for, §1, p104
Gallon, United States, wine, and imperial, §1, p109
Gas, definition of, §4, p2
permanent, definition of, §4, p44
Gases, mixture of, §4, p64
perfect and imperfect, §4, p44
specific gravity of, §4, p35
Gauge pressure, §4, p54
Gauges, vacuum, §4, p47
Gay-Lussac's law, §4, p60
G. C. D., definition of, §1, p43
Generatrix, definition of, §2, p117
Geometrical center of polygon, §2, p66
Glass, magnifying, §4, p108
Gram, definition of, §1, p115
Gravity, center of, §2, p140
specific, definition of, §4, p33
specific, formulas for, §4, pp34, 35
Great circle, §2, p125
Greatest common divisor, §1, p43
Great gross, definition of, §1, p113
Grind, definition of, §3, p17
Gross, definition of, §1, p113

H

Hardness, definition of, §4, p6
Heat capacity, §4, p68
Heat capacity, conduction of, §4, p75
definition of, §4, p66
dynamical theory of, §4, p78
expansion of bodies by, §4, p72
latent and sensible, §4, p81
mechanical equivalent of, §4, p67
quantity of, §4, p67
radiant, §4, p78
specific, §4, p68
transmission or propagation, §4, p75
Hectare, definition of, §1, p114
Height of arc, to find, §2, p75
of half the arc, to find, §2, p76
Homologous, definition of, §2, p132
lines, properties of, p133–137
Horizontal line, §2, p46; §4, p10
Humidity, relative, §4, p87
Hydrometer, description of, §4, p36
use of, §4, p38
Hydrostatic machine, §4, p23
Hydrostatics, definition of, §4, p18

I

Identical equations, §2, p18
Image or picture, §3, p1
Imaginary quantity, definition of, §2, p25
Impenetrability, definition of, §4, p4
Imperial gallon, British, §1, p109
Imperfect powers, §1, p90
Improper fraction, §I, p49
fraction, reduction of integer to, §1, p52
fraction, reduction of mixed number to, §1, p52
Impulse or blow, definition of, §4, p18
Incidence, angle of, §4, pp97, 101
Incident ray, §4, p101
Independent equations, §2, p18
Indestructibility, definition of, §4, p5
Index, absolute, of refraction, §4, p103
of refraction, §4, p103
of root, §1, p89
Inertia, definition of, §4, p5
Inferior characters, §2, p22
Inscribed angle, §2, p72
polygon, §2, p89
Insulators (of heat), §4, p75
Integer and fraction, product of, §1, p58
definition of, §1, p8
to divide by a fraction, §1, p61
reduction of, to improper fraction, §1, p52
Integral, definition of, §1, p9
Intensity of light, §4, p95
Intercept, definition of, §2, p71
Intercepted arc, §2, p71
Interior angles of polygon, §2, p49
Intersect, definition of, §2, p45
Invisible rays, §4, p111
Inverted plan, §3, p7
Inverse ratio, §1, p78
Involution, §1, p64

K

Kilo or kilogram, definition of, §1, p115
Kinetic energy, definition of, §4, p16

L

Latent heat, definition of, §4, pS1
heat of fusion, §4, pS1
heat of vaporization, §4, pS1
Lateral sides of solid, §2, p101
Law, Boyle's or Mariotte's, §4, p57
Boyle's and Gay-Lussac's combined, §4, p63
Gay-Lussac's or Charles', §4, p60
general, of all machines, §4, p24
Pascal's, §4, p21
Laws governing radiation, §4, p79
Least common denominator, §1, p52
common multiple, §1, p45
L.C.M., definition of, §1, p45
Length of circular arc, §2, pS5
Lens, definition of, §4, p104
faces of, §4, p106
focal length of, §4, p107
kind of, §4, p106
principal focus, of, §4, p107
Letters, use of, to designate lines, §2, p44
Light, brightness and intensity of, §4, p95
diffusion of, §4, p100
dispersion or decomposition of, §4, p110
emission of, §4, p91
rays, §3, p1; §4, p91
rays always straight, §4, p92
rays, beam, cone, or pencil of, §4, p92
Light, nature of, §4, p90
reflection from curved surfaces, §4, p99
reflection from plane surfaces, §4, p97
refraction of, §4, p101
velocity of, §4, p93
visible and invisible rays of, §4, p111
wave length of, §4, p91
waves, lengths and vibrations of, §4, p115
white, §4, p110
Like numbers, §1, p2
terms, §2, p5
Liquid, definition of, §4, p2
measure, table of, §1, p109
Linear equations, §2, p24
measure, table of, §1, p107
Line, broken, §2, p44
curved, §2, p44
horizontal, vertical, and plumb, §2, p46
mathematical, §2, p43
right, §2, p44
straight, definition of, §2, p43
Line, vortical, horizontal or plumb, §4, p10
of action, definition of, §4, p19
Lines, broken, use of, §3, p12
broken and dotted, use of, §3, p12
center, §3, pp10, 13
designation of, by letters, §2, p44
dimension, §3, p13
dotted, use of, §3, p12
full, use of, §3, p11
parallel, §2, p45
perpendicular, §2, p45
section, §3, p19
thickness of, §3, p11
weight of, §3, p11
Liter, definition of, §1, p115
Long division, §1, p31
Longitudinal section, §2, p102
Luminous bodies, §4, p91

M

Machines, general law of all, §4, p24
Machine, hydrostatic, §4, p23
Magnifying glass, §4, p108
Major and minor axes of ellipse, §2, p91
Malleability, definition of, §4, p6
Mariotte's law, §4, p57
Mass, definition of, §4, p11
Mathematics, definition of, §1, p2
Mathematical formula, definition of, §2, p1
line, definition of, §2, p43
Matter, definition of, §4, p1
general properties of, §4, p1
specific properties of, §4, p6
three forms of, §4, p1
Mean, arithmetical, §1, p125
Measure, angular, table of, §1, p110
circular, §2, pS3
cubic, table of, §1, p108
dry, table of, §1, p109
liquid, table of, §1, p109
linear, table of, §1, p107
square, table of, §1, p107
time, table of, §1, p113
Measurements, accuracy in, §2, p28
units of, §1, p110
Measure of force, §4, p10
Mechanical equivalent of heat, §4, p67
Medium (for light), definition of, §4, p92
Melting point, table of, §4, pS6
Members of an equation, §2, p18
Meniscus (lens), §4, p106
definition of, §4, p41
Mensuration, definition of, §2, p43
Mercurial barometer, description of, §4, p52
Mercury, weight of 1 cu. in., §4, p46
Meter, definition of, §1, p113
Metric system, §1, pp113–116
ton, §1, p115
Microscope, simple and compound, §4, p108

Minuend, definition of, §1, p18
Minus, definition of, §1, p18
Minutes (of arc), definition of, §1, p110
Mixed fractions, §1, p75
  number, §1, p49
  numbers, how to write, §1, p50
  numbers, addition of, §1, p56
  number, definition of, §1, p9
  numbers, division of, §1, p62
  numbers, multiplication of, §1, p59
  number, reduction of, to improper fraction, §1, p52
  number, to divide by a mixed number, §1, p62
  number, to divide by an integer, §1, p61
Mixtures, temperature of, §4, p70
Mixture of gases, §4, p64
Mobility, definition of, §4, p5
Molecule, definition of, §4, p2
Money, United States, table of, §1, p112
Monomial, definition of, §2, p9
Motion, definition of, §4, p7
  direction of, §4, p7
Multiple, least common, §1, p45
  prime, §1, p45
  of a number, §1, p34
Multiplicand, definition of, §1, p22
Multiplication, abbreviation in, §2, p30
  check for, §1, p26
  definition of, §1, p22
  rule for, §1, p26
  sign of, §1, p22
  by a power of 10, §1, p66
  of compound numbers, §1, p122
  of decimals, §1, p69
  of fractions, rule for, §1, p59
  of mixed numbers, §1, p59
  of monomials, §2, p7
  of polynomials, §2, pp11–13
  of numbers, §1, pp24–26
  table, §1, p23
Multiplier, definition of, §1, p22

N

Names of periods, §1, p7
Natural color, §4, p111
Naught, cipher, or zero, §1, p5
Negative and positive quantities, §2, p2
Normal, definition of, §4, p21
  pressure on submerged surface, §4, p22
Non-luminous bodies, §4, p91
Notation, Arabic, §1, pp3, 5
  definition of, §1, p3
  Roman, §1, pp3, 4
Notes on drawings, §3, p16
Number, abstract, §1, p2
  concrete, §1, p2
  definition of, §1, p1
  dividing into periods, §1, p6
Number, mixed, §1, p49
  multiple of, §1, p34
  reading a, §1, p7
  root of a, §1, p89
  significant part of, §2, p27
  value represented by figures of a, §1, p6
  composite, definition of, §1, p35
  denominate, definition of, §1, p106
  even, definition of, §1, p35
  mixed, definition of, §1, p9
  odd, definition of, §1, p35
  prime, definition of a, §1, p35
  simple and compound, definition of, §1, p106
  whole, definition of, §1, p8
  mixed, reduction of, to improper fraction, §1, p52
  mixed, to divide by a mixed number, §1, p62
  mixed, to divide by an integer, §1, p61
  of significant figures required, §2, p32
Numbers,
  addition of, §1, pp13–18
  average of, §1, p125
  cube and fifth root of, §2, p33
  divisibility of, §1, p36
  like, §1, p2
  division of, §1, p27
  multiplication of, §1, pp24–26
  names of, §1, pp3, 4
  powers of, §1, p64
  properties of, §1, pp34–38
  subtraction of, §1, p18
  unlike, §1, p2
  compound, addition of, §1, p120
  compound, division of, §1, p123
  compound, multiplication of, §1, p122
  compound, reduction of, §1, pp116–120
  compound, subtraction of, §1, p121
  mixed, addition of, §1, p56
  mixed, division of, §1, p62
  mixed, multiplication of, §1, p59
  mixed, subtraction of, §1, p57
Numeration, definition of, §1, p3
Numerator of a fraction, §1, p48
Numerical operations, accuracy in, §2, p29

O

Obtuse angle, §2, p46
Odd number, definition of, §1, p35
Opaque body, §4, p92
Open belt, to find length of, §2, p80
Optic center, §4, 106
Order of a figure, §1, p6
  of a figure, higher or lower, §1, p9
Ordinate, definition of, §2, p94
Orthographic projection, §3, p2
Ounce, fluid, §1, p109
Over-all dimensions, §3, p14

P

Paper, coloring, reason for, §4, p118
Parallel lines, §2, p45
Parallelogram, altitude and diagonal of, §2, p61
area and base of, §2, p62
definition of, §2, p61
Parallelograms, properties of, §2, p61
Parallelopiped, definition of, §2, 102
Partial vacuum, definition of, §4, p47
Pascal's law, §4, p21
Path of a body, §4, p7
Pencil of light rays, §4, p92
Penumbra, definition of, §4, p95
Per cent, definition of, §1, p98
gain or loss, rule for, §1, p104
Percentage, definition of, §1, p98
rule to find, §1, 100
Perch, definition of, §1, p108
Perfect gas, definition of, §4, p44
powers, §1, p90
vacuum, definition of, §4, p47
Perimeter, definition of, §2, p58
of polygon, §2, p48
of triangle, §2, p58
Periods, dividing a number into, §1, p6
names of, §1, p7
Periphery, definition of, §2, p70
Permanent gas, definition of, §4, p44
Perpendicular, foot of, §2, p55
lines, §2, p45
Picture or image, §3, p1
plane, the, §3, p1
Pigment, definition of, §4, p115
Pigments, mixing, §4, p115
Pipe, volume of, §2, p115
Piston, stroke of, §4, p49
Photometers, description of, §4, pp95–97
Plan, §3, p6
inverted, §3, p7
Plane, definition of, §2, p46
the picture, §3, p1
trace of, §3, p4
of symmetry, §2, p139
figure, area of any, §2, p93
figure, definition of, §2, p48
figures, projection of, §3, p25
Plano-convex lens, §4, p106
Plano-concave lens, §4, p106
Planed, definition of, §3, p17
Pliability, definition of, §4, p6
Plumb line, §2, p46; §4, p10
Plus, definition of, §1, p11
or minus sign, §2, p24
Pneumatics, definition of, §4, p42
Point, decimal, definition of, §1, p8
dew, §4, p87
of application, §4, p14
of intersection, §2, p44
of sight, §3, p2
Point of tangency, §2, p71
projection of, §3, p25
Pole, definition of, §2, p124
Polyedron, definition of, §2, p102
Polygon, convex, §2, p66
definition of, §2, p48
geometrical center of, §2, p66
inscribed and circumscribed, §2, p89
interior angles of, §2, p49
perimeter of, §2, p48
re-entrant or concave; §2, p66
regular, §2, p49
sides and angles of, §2, p48
Polynomial, arranging, according to descending powers, §2, p9
definition of, §2, p9
Polynomials, addition of, §2, p10
division of, §2, pp13–15
multiplication of, §2, pp11–13
subtraction of, §2, p10
Polygons, area of regular, §2, p68
names of, §2, p49
properties of regular, §2, p66
table of regular, §2, p68
Porosity, definition of, §4, p3
Positive and negative quantities, §2, p2
Potential energy, definition of, §4, p16
Power of a fraction, §1, p65
Powers of 10, §1, p65
of numbers, §1, p64
perfect and imperfect, §1, p90
Pressure, absolute, §4, p53
absolute zero of, §4, p54
at any depth, §4, p26
definition of, §4, p18
depth required for a given, §4, p26
due to weight of liquid, §4, p25
from vacuum gauge reading, §4, p47
gauge, §4, p54
normal, on submerged surface, §4, p22
of atmosphere, §4, p46
on submerged surface due to weight of liquid, §4, p27
specific and total, §4, p19
Pressures, combined, on submerged surface, §4, p29
Primary colors, §4, p111
Prime factors, §1, p36
marks, §2, p21
multiple, §1, p45
or prime number, definition of a, §1, p35
Priming, cause of and prevention of, §4, p90
Principal axis of lens, §4, p106
focus of lens, §4, p107
Prism, altitude of, §2, p102
area and volume of, §2, p103
definition of, §2, p102
refraction through, §4, p104
Prismatic colors, §4, p109
Prismatoids and prismoids, §2, p107

Prismoidal formula, §2, p108
Projection drawing, §3, p2
of a cylinder, §3, p25
of a point, §3, p25
of plane figures, §3, p25
orthographic, §3, p2
Product, definition of, §1, p22
Projection, definition of, §2, p58
scenographic, §3, p2
Projectors, §3, p4
Propagation of heat, §4, p75
Proper fraction, §1, p49
Proportion, compound, §1, p83
definition of, §1, p79
direct and inverse, §1, p80
how to read a, §1, p80
law of, §1, p80
names of terms of a, §1, p80
three ways of writing, §1, p80
to find value of unknown term, §1, p81
Protractor, §2, p46
Pull, definition of, §4, p9
Pulley, crown of, §3, p23
Pump, suction, description of, §4, p48
work required to operate, §4, p49
Push, definition of, §4, p9
Pyramid, area and volume of, §2, p105
axis of, §2, p105
definition of, §2, p104
frustum of, volume of, §2, p106
regular, §2, p105
slant height of, §2, p105
vertex and altitude of, §2, p104

Q

Quadrant, defintion of, §1, pp110, 112
Quadratic equation, formula for roots of, §2, p25
equations, §2, p23, 24
equations, solution of, §2, p25
Quantity, definition of, §1, p2
imaginary, definition of, §2, p25
literal, §2, p3
numerical, §2, p3
numerical value of, §2, p3
of heat, §4, p67
unknown, §2, p23
Quantities, positive and negative, §2, p2
Quire, definition of, §1, p113
Quotient, definition of, §1, p28

R

R, value of for gas or air, §4, pp63, 64
Radial section, §3, p23
section, definition of, §2, p143
Radian, definition of, §2, p84
Radiant, definition of, §4, p93
heat, §4, p78
Radiation, definition of, §4, p77
laws governing, §4, p79
Radius, definition of, §2, p70
of arc, to find, §2, p75
of circle, to find, §2, p77
of sphere, §2, p124
Rate and rate per cent., difference between, §1, p99
per cent., definition of, §1, p99
rule for equivalent discount, §1, p103
rule to find, §1, p100
Ratio, definition of, §1, p78
direct and inverse, §1, p78
signs of, §1, p78
terms of, §1, p78
value of, §1, p78
Ray, incident, §4, p101
of light, §4, p91
refracted, §4, p101
Rays, actinic, §4, p91
definition of, §2, p131
light, §3, p1
of light, beam, cone or pencil of, §4, p92
refrangible, §4, p104
ultra-red and ultra-violet, §4, p111
visible and invisible, §4, p111
Reading a number, §1, p7
drawings,
guard for movable jaw of vise, §3, p28
mercer cell, the, §3, p30
rotary drying furnace, §3, p33
worm washer, §3, p33
drawings, directions for, §3, pp25–28
Ream, definition of, §1, p113
or reamed, definition of, §3, p16
Rear elevation, §3, p7
view, §3, p7
Reciprocal, definition of, §2, p4
Reduction ascending and descending, of fractions, §1, p51
of common fraction to a decimal, §1, p74
of compound numbers, §1, pp116–120
of decimals to common fractions, §1, pp67, 68
of decimals to fractions having a given denominator, §1, p75
of fractions, §1, p50
of fractions to common denominator, §1, p52
of fractions to lowest terms, §1, p51
of integer to improper fraction, §1, p52
of mixed number to improper fraction, §1, p52
Re-entrant angle, §2, p66
polygon, §2, p66
Reflection, angle of, §4, p97
of light, §4, pp97–100
total, §4, p103
Refracted ray, §4, p101
Refraction, angle of, §4, p101

Refraction, index of, §4, p103
of light, §4, p101
through prism, §4, p104
Refrangible rays, §4, p104
Regular polygon, definition of, §2, p49
polygons, properties of, §2, p66
polygons, table of, §2, p68
pyramid, §2, p105
Relative, definition of, §4, p7
Remainder, definition of, §1, p18, 28
Rest, definition of, §4, p6
Rhomboid, definition of, §2, p61
Rhombus, definition of, §2, p61
Right angle, definition of, §1, pp110, 112 §2, 46
cone, §2, p120
cylinder, §2, p110
line, §2, p44
parallelopiped, §2, p102
prism, §2, p102
section, §2, p102
triangle, properties of, §2, p53
Rigidity, definition of, §4, p6
Ring, area of, §2, p82
Roman notation, §1, pp3, 4
Root, index of, §1, p89
of a number, §1, p89
rule for square, §1, p95
Roots of an equation, §2, p25
Rules, trapezoidal and Simpson's, §2, p95
Rumford's method of measuring intensity of light, §4, p96

S

Satisfied, when equation is said to be, §2, p19
Saturated vapor, §4, p83
Scale, Beaumé, §4, p37
drawing, definition of, §3, p15
drawing to, §3, p14
Scales, centigrade and Fahrenheit, §4, p43
definition of, §3, p14
special, §3, p16
Scaling a drawing, §3, p16
Scenographic projection, §3, p2
Scraped, definition of, §3, p17
Secant, definition of, §2, p70
Second degree equations, §2, p24
Secondary colors, §4, p111
Seconds (of arc), definition of, §1, p110
Section, cross, §3, p23
lines, §3, p19
radial, §3, p23
radial, definition of, §2, p143
Sectional view, §3, p17
Sections, conventional, §3, p22
definition of, §3, p17
right, cross, and longitudinal, §2, p102
standard, §3, pp19–21
thin, §3, p21
Sector, area of, §2, p87
definition of, §2, p70
spherical, base of, §2, p127
Segment, area of, §2, p87
of circle, definition of, §2, p70
of line, definition of, §2, p43
spherical, §2, p126
spherical, volume of, §2, p126
Semicircle, definition of, §2, p70
Semi-transparent body, §4, p92
Sensible heat, definition of, §4, p81
Shadow, definition of, §4, p94
Short division, §1, p29
Shrinking fits, §4, p74
Side elevation, §3, p6
of square, length of, §2, p64
view, §3, p6
Sides of a solid, §2, p101
of angle, §2, p45
Sight, point of, §3, p2
Sign, double, meaning of, §2, p24
of equality, definition of, §1, p11
of multiplication, §1, p22
of product of two monomials, §2, p7
plus, definition of, §1, p11
plus or minus, §2, p24
of quotient, §2, p8
of subtraction, §1, p18
Significant figures, §2, p27
figures, number of, required, §2, p32
part of a number, §2, p27
Signs of a fraction, §2, p16
of aggregation, §1, p76; §2, p15
of division, §1, p28
of ratio, §1, p78
Similar figures, §2, p131
triangles, §2, p52
Simple microscope, §4, p108
number, definition of, §1, p106
Simpson's rule, §2, p95
Sink, why some bodies, §4, p32
Siphon, description of, §4, p50
Slant height of cone, §2, p121
height of pyramid, §2, p105
Small circle, §2, p125
Solar spectrum, §4, p109
Solid, definition of, §4, p2
of revolution, volume of, §2, p142
sides, bases, and edges of, §2, p101
Specific gravity and density, distinction between, §4, p35
gravity by hydrometer, §4, p37
gravity, definition of, §4, p33
formulas for, §4, pp34, 35
gravity of gases, §4, p35
heat, definition of, §4, p68
table of, §4, pp69, 70
pressure, definition of, §4, p19
weight, §4, p14
Spectroscope, description of, §4, p113
Spectrum analysis, §4, p112

Spectrum, solar, §4, p109
Sphere, area and volume of, §2, p125
axis of, §2, p124
center of, §2, p124
definition of, §2, p124
radius and diameter of, §2, p124
Spherical sector, base of, §2, p127
segment, definition of, §2, p126
segment, volume of, §2, p126
surface, §2, p124
Square, diagonal of, length of, §2, p63
foot, definition of, §1, p111
measure, table of, §1, p107
root, rule for, §1, p95
side of, length of, §2, p64
Standard candle, §4, p95
conditions, definition of, §4, p36
sections, §3, pp19–21
Steam, dry, saturated, or superheated, §4, p83
temperature of dry and saturated, §4, p83
total heat of, §4, p84
Straight line, definition of, §2, p43
Stroke of piston or plunger, §4, p49
Subscripts, §2, p22
Subtended, definition of, §2, p71
Subtraction, definition of, §1, p18
of compound numbers, §1, p121
of decimals, §1, p68
of fractions, §1, p56
of monomials, §2, p6
of polynomials, §2, p10
rule for, §1, p19
sign of, §1, p18
Subtrahend, definition of, §1, p18
Suction, height of, §4, p49
pump, description of, §4, p48
Sum, definition of, §1, p11
of two fractions, §1, p55
Superheated vapor, §4, p83
Superior characters, §2, p22
Superposition, §2, p52
Surface, conical, §2, p120
cylindrical, §2, p110
definition of, §2, p47
spherical, §2, p124
tension, §4, p88
Symmetrical figures, §2, p137
Symmetry, axis of, §2, p137
center of, §2, p138
plane of §2, p139
with respect to a point, §2, p140

T

Table, addition, §1, p12
multiplication, §1, p23
of coefficients of conductivity, §4, p76
of coefficients of expansion, §4, p73
Table of melting and boiling points, §4, p86
of specific heats, §4, pp69, 70
Tangency, point of, §2, p71
Tangent, definition of, §2, p71
Tap, definition of, §3, p17
Teaspoon, definition of, §1, p115
Temperature, absolute, §4, p61
absolute zero of, §4, p61
of mixtures, §4, p70
Tenacity, definition of, §4, p6
Tension of gases, definition of, §4, p42
surface, §4, p88
Terms, like and unlike, §2, p5
of a fraction, §1, p49
of a ratio, §1, p78
Tertiary colors, §4, p111
thds., definition of, §3, p16
Thermal conductivity, definition of, §4, p76
unit, British, §4, p67
Thermometer, definition of, §4, p42
Thickness of lines, §3, p11
Three-color process, §4, p116
Time, measures of, table of, §1, p113
Ton, long and short, difference between, §1, p108
Tonne or metric ton, §1, p115
Tool fin. or tool finish, definition of, §3, p17
Top view, §3, p6
Torreeellian vacuum, §4, p46
Torus, volume of, §2, p142
Total energy, §4, p17
pressure, definition of, §4, p19
reflection, §4, p103
Trace, front, §3, p4
of a plane, §3, p4
side, §3, p4
Transformation of equations, §2, pp19, 21
Translucent body, §4, p92
Transmission of heat, §4, p75
Transparent body, §4, p92
Transposing terms of equation, §2, p19
Trapezium, area of, §2, p65
definition of, §2, p64
Trapezoid, area of, §2, p64
definition of, §2, p64
Trapezoidal rule, §2, p95
Trial dividend, §1, p92
divisor, §1, p92
Triangle, altitude of, §2, p56
base of, §2, p51
perimeter of, §2, p58
relation between sides of, §2, p59
Triangles, area of, §2, pp55–58
classification of, §2, p50
properties of, §2, p51
proportionality of, §2, p52
right, properties of, §2, p53
similar, §2, p52
Troy weight, §1, p109
Tube, volume of, §2, p115

U

Ultra-red and ultra-violet rays, §4, p111
Umbra, definition of, §4, p95
Ungula, area of, §2, p113
  volume of, §2, p114
Uniform velocity, §4, p8
Unit, British thermal, §4, p67
  definition of, §1, p1
  of acceleration, §4, p9
  of work, §4, p14
United States gallon, §1, p109
  money, table of, §1, p112
Units of measurement, §1, p110
Unknown quantity, definition of, §2, p23
Unlike numbers, §1, p2
  terms, §2, p5

V

Vacuum, definition of, §4, p33
  gauges, §4, pp47, 54
  perfect and partial, §4, p47
  Torricellian, §4, p46
  weight in, §4, p33
Value of a fraction, §1, p49
  of ratio, §1, p78
Vaporization, latent heat of, §4, p81
Variable velocity, §4, p8
Variables, definition of, §2, p32
Velocity, definition of, §4, p7
  of light, §4, p93
  uniform or constant, §4, p8
  unit of, §4, p8
  variable, §4, p8
Vertex of angle, §2. p45
  of cone, §2, p120
  of pyramid, §2, p104
Vertexes of ellipse, §2, p91
Vertical line, §2, p46
  line, definition of, §4, p10
Vibgyor, meaning of, §4, p109
View, back or rear, §3, p7
  bottom, §3, p7
  front, §3, p6
  sectional, §3, p17
  side, §3, p6
  top, §3, p6
Views, names of, §3, p6
  number of, §3, p6
Viscosity, definition of, §4, p88
Visible rays, §4, p111
Visibility of objects, §4, p101
Visualizing objects from drawings, §3, p23
Volume of any cylinder, §2, p114
  of cone, §2, p121
  of cylindrical ring or torus, §2, p142
  of frustum of cone, §2, p123
  of pipe or tube, §2, p115
  of prism, §2, p103
  of pyramid, §2, p105
  of sphere, §2, p125
  of spherical sector, §2, p127
  of spherical segment, §2, p126
  of solid of revolution, §2, p142
  of ungula, §2, p114
  of wedge, §2, p109

W

Water seeks its level, explanation of, §4, p28
Wave length of light, §4, p91
Waves, light, lengths and vibrations of, §4, p115
Wedge, volume of, §2, p109
Weight, avoirdupois, table of, §1, p108
  definition of, §4, p5
  in vacuum, §4, p33
  of air or gas, formula for, §4, p64
  of lines, §3, p11
  specific, §4, p14
  troy, §1, p109
  variation of, §4, p13
White light, §4, p110
Whole number, definition of, §1, p8
Winchester bushel, §1, p109
Wine gallon, §1, p109
Work, definition of, §4, p15
  required to operate pump, §4, p49
  unit of, §4, p14
Working drawing, §3, p8

Y

Yard, definition of, §1, p110
Year, length of, §1, p113

Z

Zero, absolute, of pressure, §4, p54
  absolute, of temperature, §4, p61
  naught, or cipher, §1, p5
Zone, area of, §2, p126

The Manufacture of Pulp & Paper
Vol. I Mathematics, Reading
Drawings, Physics